Volume 4C: **Circuit Protection**
Bussmann series solutions

BUSSMANN SERIES

EATON
Powering Business Worldwide

# Don't miss a sale or an opportunity to upgrade your fuse protection

**Three tiers offer distinct levels of circuit protection**

1. **Ultimate** - Unique element designs deliver a powerful combination of operating characteristics in one fuse — fast short-circuit protection, current limitation, and time-delay with up to 300 kA interrupting ratings.
2. **Advanced** - Choose between fast-acting, short-circuit, current limiting protection or time-delay energy efficient, current limiting protection based on the application with 200 kA interrupting ratings.
3. **Basic** - Basic single-element protection for service, feeder and branch circuit applications with up to 100 kA interrupting ratings.

**The arrows below show you the way**

**CUBEFuse™ protection**

For finger-safe protection in a small footprint up to 600 V and 100 A, upgrade to the time-delay or fast-acting CUBEFuse. Amp rating rejection feature helps prevent overfusing in the CUBEFuse holder (page 1-11) or CCP2-CF UL 98 disconnect switch (page 11-6).

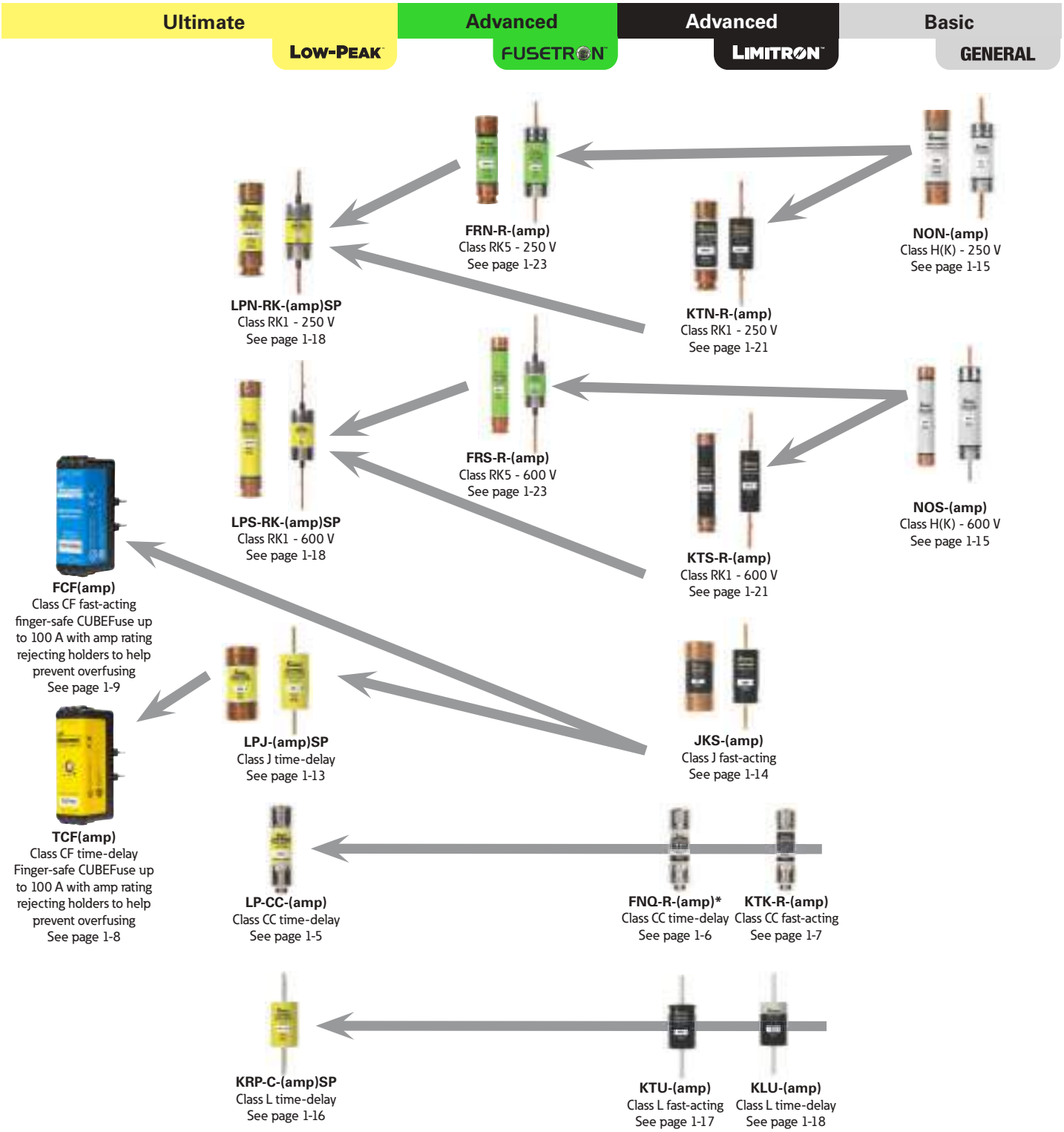


* FNQ-R fuses are suggested on primary of control transformers - do NOT upgrade to LP-CC.

# The power of space

From the revolutionary Bussmann™ series CUBEFuse to its unique fuse holder or Compact Circuit Protector, we're continually innovating to give you products that help you go big, by going small.

## Contents


| Description | Catalog section |
|---|---|
| Selecting fused circuit protection | Introduction |
| Low voltage branch circuit fuses | 1 |
| Low voltage supplemental fuses and limiters | 2 |
| Electronic, PCB and small dimension fuses | 3 |
| High speed fuses | 4 |
| IEC and British Standard fuses | 5 |
| Photovoltaic fuses, holders and blocks | 6 |
| Medium voltage fuses | 7 |
| Fuse blocks and holders | 8 |
| Power distribution and terminal blocks | 9 |
| Connector products | 10 |
| Disconnect switches | 11 |
| Quik-Spec™ electrical gear | 12 |
| Surge protective devices | 13 |
| Telecom protection products | 14 |
| Accessories | 15 |
| Fuse sizing for 600 V building electrical systems | 16 |
| Selective coordination | |
| Low voltage, branch circuit fuse types and classes | |
| Glossary of common electrical terms | |
| Electrical formulas | |
| Fuse and fuse block cross reference | |
| Catalog number index | |
| Low-Peak™ Upgrade program and fuse inventory consolidation | Inside back cover |


Bussmann series circuit protection solutions comply with major industrial standards and agency requirements such as: BS, IEC, DIN, UL, NEMA, CSA, CE, C-UL, etc. and are manufactured at facilities that are ISO 9000 certified.

This catalog is intended to present product data and provide technical information that will help the end user with design application. Eaton reserves the right, without notice, to change design or construction or any products and to discontinue or limit distribution of any products. Eaton also reserves the right to change or update, without notice, any technical information contained in this catalog. Once a product has been selected, it should be tested by the user in all possible applications. Further, Eaton takes no responsibility for errors or omissions contained in this catalog, or for misapplication of any Eaton product. Extensive product information is available in the Eaton product data sheets available on line at Eaton.com/bussmannseries.

©2018 Eaton

## Selecting fused circuit protection

The following fuse selection tables are based on the 2017 NEC and provide fuse recommendations for the listed applications.

These are only suggestions. Final fuse selection should be performed by qualified personnel able to fully assess an application's circuit protection requirements.

If you need assistance in selecting a fuse, contact the Eaton Application Engineering team Monday through Friday, 7:00 a.m. — 5:00 p.m. Central time.

Application Engineering can be reached via phone (toll-free 855-287-7626 ) and email (FuseTech@Eaton.com).

To locate the recommended fuse product pages, use the index starting on page 16-4.

### Ballasts

| Location | Type | Notes | Fuse recommendation | Fuse holder recommendation |
|---|---|---|---|---|
| Indoor | Fluorescent | Consult fixture manufacturer for size and type | GLR, GMF, GRF | HLR |
| | | | GLQ, GMQ | HLQ |
| | All other (mercury, sodium, etc.) | Consult fixture manufacturer for size and type | BAF, KTK, FNM, FNQ | HPF, HPS |
| | | | KTK-R, FNQ-R, LP-CC | HPS-RR, HPF-RR |
| | | | BBS | HPS-L, HPF-L |
| | | | SC up to 15 amps | HPF-EE, HPS-EE |
| | | | SC 20 amp | HPF-JJ, HPS-JJ |
| | | | SC 25-30 amps | HPF-FF, HPS-FF |
| Outdoor | Mercury, sodium, etc. | Consult fixture manufacturer for size and type. | BAF, KTK, FNM, FNQ | HEB, HEX, HPC-D |
| | | | KTK-R, FNQ-R, LP-CC | HEY, HEZ |

### Capacitors (NEC 460)

| Protected by | Sizing | Fuse/volt recommendation |
|---|---|---|
| Time-delay fuses | 150% to 175% of Full Load Current (FLC) | Up to 250 V: LPN-RK_SP, FRN-R<br>Up to 600 V: LPS-RK_SP, FRS-R, LPJ_SP, LP-CC, FNQ-R, TCF |
| Non time-delay fuses | 250% to 300% of Full Load Current (FLC) | Up to 250 V: KTN-R<br>Up to 300 V: JJN<br>Up to 600 V: KTS-R, JKS, KTK-R, JJS, FCF_RN |
| On loadside of motor running overcurrent device | Protection recommended as shown, but not required | — |

### Electric heat (NEC 424)

| Heating type | Sizing | Fuse/volt recommendation |
|---|---|---|
| Space heating | 125% or next size larger but in no case larger than 60 amps for each subdivided load | Up to 250 V: LPN-RK_SP, FRN-R, NON<br>Up to 300 V: JJN<br>Up to 480 V; SC 25 to SC 60<br>Up to 600 V: LPS-RK_SP, FRS-R, NOS, JJS, LPJ_SP, LP-CC, FNQ-R, JKS, KTK-R, TCF, SC 1/2 to SC 20, FCF_RN |
| Boilers (ASME rated and stamped vessel) | 125% or next size larger but in no case larger than 150 amps for each subdivided load | |

### Mains, feeders, branches (NEC 430)

| Circuit type | Circuit loads | Sizing | Fuse/volt recommendation |
|---|---|---|---|
| **Feeder circuits ≤ 600 A** | No motor load | 100% of non-continuous load plus 125% of continuous load | Up to 250 V: LPN-RK_SP, FRN-R<br>Up to 300V: JJN<br>Up to 600 V: LPS-RK_SP, FRS-R, JJS, LPJ_SP, LP-CC, JKS, KTK-R |
| | Combination motor and other loads | 150% of the FLA of largest motor (if there are two or more motors of same size, one is considered to be the largest) plus the sum of all the FLA for all other motors plus 100% of non-continuous, non-motor load plus 125% of continuous, non-motor load. A maximum of 175% (or the next standard size if 175% does not correspond to a standard size) is allowed for all but wound rotor and all DC motors. | Up to 250 V: LPN-RK_SP, FRN-R<br>Up to 600 V: LPS-RK_SP, FRS-R, LPJ- SP, LP-CC |
| | Motor loads | 150% of the FLA of largest motor (if there are two or more motors of same size, one is considered to be the largest) plus the sum of all the FLA for all other motors. A maximum of 175% (or the next standard size if 175% does not correspond to a standard size) is allowed for all but wound rotor and all DC motors. | |
| **Main, branch and feeder circuits (601-6000 A)** | — | 150% to 225% of full load current of largest motor plus 100% of full load current of all other motors plus 125% of continuous non-motor load plus 100% of non-continuous non-motor load | Up to 600 V: KRP-C_SP |

### Motor loads (NEC 430)

| Circuit voltage | Fuse type | Fuse sized for | Sizing | Fuse/volt recommendation |
|---|---|---|---|---|
| **600 V and less** | Time-delay fuses | Backup overload with motor starter and short-circuit protection | 125% of motor FLA or next size larger | Up to 250 V: FRN-R<br>Up to 600 V: FRS-R |
| | | | 130% of motor FLA or next size larger | Up to 250 V: LPN-RK_SP<br>Up to 600 V: LPS-RK_SP |
| | | Short-circuit only | 175% of motor FLA or next size larger. (If 175% does not correspond to a standard size). If this will not allow motor to start, due to higher than normal inrush currents or longer than normal acceleration times (5 seconds or greater), fuse may be sized up to 225% or next size smaller. **NOTE**: 150% for wound rotor and all DC motors. | Up to 250 V: LPN-RK_SP, FRN-R<br>Up to 600 V: LPS-RK_SP, FRS-R, LPJ_SP, TCF |
| | Non-time delay and all Class CC fuses | Short-circuit only | Maximum of 300% of motor FLA or next size larger (if 300% does not correspond to a standard size). If this will not allow motor to start due to higher than normal inrush currents or longer than normal acceleration times (5 seconds or greater), fuses through 600 amps may be sized up to 400% or next size smaller. **Note**: 150% for wound rotor and all DC motors. | Up to 250 V: KTN-R<br>Up to 300 V: JJN<br>Up to 600 V: KTS-R, JJS, LP-CC, JKS, KTK-R, FCF_RN |
| **Above 600 V** | — | — | Compare the minimum melting time-current characteristics of the fuses with the time-current characteristics of the overload relay curve. The size fuse which is selected should be such that short-circuit protection is provided by the fuse and overload protection is provided by the controller overload relays. | Up to 2400 V: JCH, JCK, JCK-A, JCK-B, 2ACLS, 2BCLS, 2CLS, 2HCLS<br>Up to 4800 V: JCL, JCL-A, JCL-B, 5ACLS, 5BCLS, 5CLS, 5HCLS<br>Up to 7200 V: 7BCLS, 7.2WKMSJ, 8ACLS, 8CLS |

### Solenoids (coils)

| Fuse type | Sizing | Fuse/volt recommendation |
|---|---|---|
| **Branch circuit** | Size at 125% or next size smaller | Up to 250 V: LPN-RK_SP, FRN-R (best)<br>Up to 600 V: LPS-RK_SP, FRS-R, LPJ_SP, LP-CC, FNQ-R, TCF |
| **Supplemental** | Size at 125% or next size larger | Up to 32 V: MDL 9-30 A, FNM 20-30 A<br>Up to 125 V: MDA 25-30 A, FNM 12-15 A<br>Up to 250 V: MDL 1/16-8 A, MDA 2/10-20 A, FNM 1/10-10 A, MDQ 1/100-7 A<br>Up to 500 V: FNQ 1/10-30 A |

## Transformers 600 V nominal or less (NEC 450.3)

| Protection type | Thermal overload protection | Transformer impedance | Rated current | Optimum protection* | NEC maximums | Fuse/volt recommendation |
|---|---|---|---|---|---|---|
| **Primary only (Note: components on the secondary still need overcurrent protection)** | — | — | Primary < 2 amps | 125% or next size larger | 300% or next size smaller (see NEC 430.72(C) for control circuit transformer maximum of 500%) | Up to 250 V: LPN-RK_SP, FRN-R<br>Up to 600 V: KRP-C_SP, LPJ_SP, LPS-RK_SP, FNQ-R, FRS-R, TCF |
| | | | Primary ≥ 2 amps but < 9 amps | 125% or next size larger | 167% or next size smaller | |
| | | | Primary ≥ 9 amps | 125% or next size larger | 125% or next size larger** | |
| **Primary and secondary** | Without | — | Secondary < 9 amps (see **A**) | Primary and secondary fuses at 125% of primary and secondary FLA or next size larger | **% of primary FLA (or next FLA size smaller)**<br>**A** = 250%<br>**B** = 250%<br>**C** = 600%<br>**D** = 600%<br>**E** = 400%<br>**F** = 400%<br>**% of secondary FLA**<br>**A** = 167% or next size smaller<br>**B** = 125% or next size larger**<br>**C** = 167% or next size smaller<br>**D** = 125% or next size larger**<br>**E** = 167% or next size smaller<br>**F** = 125% or next size larger** | |
| | | | Secondary ≥ 9 amps (see **B**) | | | |
| | With | ≤ 6% | Secondary < 9 amps (see **C**) | | | |
| | | | Secondary ≥ 9 amps (see **D**) | | | |
| | | > 6% but < 10% | Secondary < 9 amps (see **E**) | | | |
| | | | Secondary ≥ 9 amps (see **F**) | | | |

* When sizing the primary fuse for optimum protection, verify the inrush current with the transformer manufacturer and review fuse time-current characteristics.
**When 125% of FLA corresponds to a standard rating, the next larger size is not permitted.

### Transformers over 600 V nominal (NEC 450.3)

Supervised installations

| Protection for | Transformer impedance | Primary Sizing | Secondary volts | Secondary sizing | Fuse/volt recommendation |
|---|---|---|---|---|---|
| **Primary only** | N/A | Code maximum of 250% or next standard size if 250% does not correspond to a standard rating<br>Note: Components on the secondary still need overcurrent protection | N/A | N/A | Up to 250 V: LPN-RK_SP, FRN-R<br>Up to 600 V: LPS-RK_SP, LPJ-_SP, KRP-C_SP, FRS-R, FNQ-R, TCF<br>Up to 2.475 kV: 2NCLPT, 2CLPT<br>Up to 2.75 kV: 2CLE, 2HLE<br>Up to 2750/5500 V: JCW<br>Up to 5.5 kV: 5HLE, 5CLE, 5HCL, 5BHCL, 5BHLE, 5AHLE, JCY, MV05, 5.5 ABWNA, 5.5 AMWNA, 5.5 FFN<br>7 Up to 7.2 kV:.2 AMWNA, 7.2 TDLSJ, 7.2 TFLSJ<br>Up to 8.3 kV: 8HLE, 8CLE, 8BHLE, 8AHLE, 8CLPT, 8NCLPT, 8HCL, 8.25 FFN<br>Up to 15.5 kV: 15CLPT, 15NCLPT, 15CLE, 15HLE, 15BHLE, 15LHLE, 15HCL, 15BHCL, MV155, 15.5 CAVH<br>Up to 17.5 kV: 17.5 CAV, 17.5 TDM<br>Up to 24 kV: 24 TDM, 24 TFM, 24 FFM<br>Up to 36 kV: 36 CAV, 36 TDQ, 36 TFQ<br>Up to 38 kV: 38CLPT, 38 CAV |
| **Primary and secondary** | ≤ 6% | At code maximum of 300% | > 600 V | At code maximum of 250% | |
| | | | ≤ 600 V | At code maximum of 250% | |
| | > 6% but < 10% | At code maximum of 300% | > 600 V | At code maximum of 225% | |
| | | | ≤ 600 V | At code maximum of 250% | |

Unsupervised installations

| Transformer impedance | Primary Sizing | Secondary volts | Secondary sizing | Fuse/volts recommendation |
|---|---|---|---|---|
| **≤ 6%** | At code maximum of 300% or next standard size if 300% does not correspond to a standard rating | > 600 V | At code maximum of 250% or next standard size if 250% does not correspond to a standard rating | Up to 250 V: LPN-RK_SP, FRN-R<br>Up to 600 V: LPS-RK_SP, LPJ-_SP, KRP-C_SP, FRS-R, FNQ-R, TCF<br>Up to 2475 V: 2NCLPT, 2CLPT<br>Up to 2.75 kV: 2CLE, 2HLE<br>Up to 2750/5500 V: JCW<br>Up to 5.5 kV: 5HLE, 5CLE, 5HCL, 5BHCL, 5BHLE, 5AHLE, JCY, MV05, 5.5 ABWNA, 5.5 AMWNA, 5.5 FFN<br>Up to 7.2 kV: 7.2 AMWNA, 7.2 TDLSJ, 7.2 TFLSJ<br>Up to 8.3 kV: 8HLE, 8CLE, 8BHLE, 8AHLE, 8CLPT, 8NCLPT, 8HCL, 8.25 FFN<br>Up to 15.5 kV: 15CLPT, 15NCLPT, 15CLE, 15HLE, 15BHLE, 15LHLE, 15HCL, 15BHCL, MV155, 15.5 CAVH<br>Up to 17.5 kV: 17.5 CAV, 17.5 TDM<br>Up to 24 kV: 24 TDM, 24 TFM, 24 FFM<br>Up to 36 kV: 36 CAV, 36 TDQ, 36 TFQ<br>Up to 38 kV: 38CLPT, 38 CAV |
| | | ≤ 600 V | At code maximum of 125% or next standard size if 125% does not correspond to a standard rating | |
| **> 6% but < 10%** | At code maximum of 300% or next standard size if 300% does not correspond to a standard rating | > 600 V | At code maximum of 225% or next standard size if 225% does not correspond to a standard rating | |
| | | ≤ 600 V | At code maximum of 125% or next standard size if 125% does not correspond to a standard rating | |

### Solid state devices (diodes, SCRs, triacs, transistors)

| Protection type | Sizing | Fuse/volts recommendation |
|---|---|---|
| **Short-circuit only** | F, S, K, and 170M fuse families sized up to several sizes larger than full load RMS or DC rating of device | Up to 130 V: FWA<br>Up to 250 V: FWX<br>Up to 500 V: FWH<br>Up to 600 V: FWC, KAC, KBC<br>Up to 700 V: FWP, 170M_, SPP<br>Up to 1000 V: FWJ, 170M_, SPJ |

BUSSMANN SERIES

# Do you know about the new 2017 NEC® SCCR requirements?

## Finding out is easy.

Eaton's Bussmann™ series handbook *Code changes affecting Short-Circuit Current Ratings based on the 2017 NEC* will help you:

**Know** why SCCR is important.

**Understand hazards** associated with insufficient SCCR.

**Know** what specific NEC chapters, articles, parts and sections are involved.

**Comply** with Code requirements for marking and documenting SCCR.

If you're designing, installing or inspecting equipment, download your copy at **Eaton.com/nec2017sccr**.

Or, check out our comprehensive SCCR resources at **Eaton.com/bussmannseries/SCCR**.

EATON
*Powering Business Worldwide*

Follow us on social media to get the latest product and support information.

# The power of space

The revolutionary Bussmann™ series Low-Peak™ CUBEFuse™ delivers the smallest footprint compared to any Class J or RK fuse solution — requiring up to 70% less space when combined with its unique fuse holder.

## Contents


| Description | | | Section page |
|---|---|---|---|
| Fuse holder and block selection guide | | | 2 |
| Fuse reducers | | | |
| Branch circuit fuse dimensions | | | 3-4 |
| **Fuse class** | **Catalog symbol** | **Volts** | |
| CC | LP-CC | 600 V | 5 |
| | FNQ-R | | 6 |
| | KTK-R | | 7 |
| CF | TCF | 600 V | 8 |
| | FCF | | 9 |
| | WCF | 690 V | 10 |
| | TCFH_ Class CF holders | 600 V | 11 |
| G | SC | 600/480 V | 12 |
| J | LPJ-_SP | 600 V | 13 |
| | LPJ-_SPI indicator | | |
| | JKS | | 14 |
| H(K) | NON | 250 V | 15 |
| | NOS | 600 V | |
| L | KRP-C_SP | 600 V | 16 |
| | KRP-CL (225 to 600 A) | | 17 |
| | KTU | | |
| | KLU | | 18 |
| RK1 | LPN-RK_SP | 250 V | 18-20 |
| | LPN-RK_SPI indicator | | |
| | LPS-RK_SP | 600 V | |
| | LPS-RK_SPI indicator | | |
| | KTN-R | 250 V | 21-22 |
| | KTS-R | 600 V | |
| RK5 | FRN-R | 250 V | 23-24 |
| | FRN-R_ID indicator | | |
| | FRS-R | 600 V | |
| | FRS-R_ID indicator | | |
| T | JJN | 300 V | 25-26 |
| | JJS | 600 V | |
| Plug fuses | SL, TL and W | 125 V | 27 |
| | P, S, T and TC | | 28 |
| | MB Edison base circuit breakers | | 29 |
| | SA fuse adapters | | |
| | Box cover units | | 30 |


**For conductor protection, see cable limiters in Section 2, page 3.**

## Fuse holder and block selection guide

Catalog pages for the blocks and holders are denoted parenthetically "()" next to their catalog symbol.

| Fuse class | Catalog symbol | Blocks | DIN-Rail holders | Panel mount holders | In-line holders |
|---|---|---|---|---|---|
| CC | FNQ-R<br>KTK-R<br>LP-CC | BCM (8-6)<br>3743 (8-14)<br>4421 (8-14)<br>4515 (8-14) | CHCC (8-8)<br>OPM-1038 (8-12)<br>OPM-NG (8-13)<br>CCP2-CC††† (11-2) | HPF-RR (8-43)<br>HPS-RR (8-45)<br>CCPLP††† (30 A) (11-32) | HEY (8-53)<br>HEZ (8-52) |
| CF | FCF<br>TCF<br>WCF†† | TCFH (1-11)<br>TCFHNW (1-11)<br>(Panel and DIN-Rail mount) | CCP2-CF††† (11-6)<br>CCP2B††† (11-29) | — | — |
| G | SC | BG (8-15)<br>G (8-15) | — | CCPLP††† (20 A) (11-32)<br>HPG-EE (15 A) (8-44)<br>HPS-EE (15 A) (8-45)<br>HPS-FF (30 A) (8-45)<br>HPS-JJ (20 A) (8-45) | HEC (30 A) (8-49)<br>HEG (15 A) (8-49)<br>HEH (20 A) (8-49)<br>HEJ (60 A) (8-49) |
| H(K) 250 V | NON (250 V) | HM25_ (8-19)<br>HM25060_MW* (8-24) | — | — | — |
| H(K) 600 V | NOS (600 V) | HM60_ (8-19)<br>HM60030_MW* (8-24) | — | — | — |
| J | LPJ<br>JKS | JM60_ (8-31)<br>JM60_MW* (8-33)<br>JP60030 (8-30) | CH_J (8-28)<br>JT(N) (8-29) | — | — |
| L | KRP-C<br>KRP-CL<br>KLU<br>KTU | 51215**<br>51235** | — | — | — |
| RK1 250 V | LPN-RK<br>KTN-R | RM25_ (8-21)<br>RM25_MW* (8-26) | — | — | — |
| RK1 600 V | LPS-RK<br>KTS-R | RM60_ (8-21)<br>RM60_MW* (8-26) | — | — | — |
| RK5 250 V | FRN-R | RM25_ (8-21)<br>RM25_MW* (8-26) | — | — | — |
| RK5 600 V | FRS-R | RM60_ (8-21)<br>RM60_MW* (8-26) | — | — | — |
| T 300 V | JJN | T300 (8-35) | — | — | — |
| T 600 V | JJS | T600 (8-37) | | | |
| T up to 600 V | JJN/JJS | BH-0_, BH-1_, BH-3_† (8-39) | | | |
| Plug fuses | P, T, TC, TL, W Edison base | Box cover units (1-30) | — | — | — |
| | S, SL rejection base | SA adapters (1-29) | — | — | — |

* Power distribution fuse blocks.
** Up to 800 A, contact customer satisfaction at 855-287-7626 for more information.
† Various blade bolt-on up to 700 A, see data sheets for limitations.
†† WCF (wind CUBEFuse) is rated to 690 V and is not a UL Listed Class CF fuse and can only be applied in the TCFHNW holder.
††† UL 98 Listed disconnect switch, available in 1-, 2- and 3-pole versions.

### 250 V Class R fuse reducers

| Equipment fuse clip amps | Desired fuse (case) amp size | Catalog no. (pairs) |
|---|---|---|
| 60 | 30 | NO.263-R |
| 100 | 30 | NO.213-R |
| | 60 | NO.216-R |
| 200 | 60 | NO.226-R |
| | 100 | NO.2621-R |
| 400 | 100 | NO.2641-R |
| | 200 | NO.242-R |
| 600 | 100 | NO.2661-R |
| | 200 | NO.2662-R |
| | 400 | NO.2664-R* |

* Single reducer only (pair not required).

### 600 V Class R fuse reducers

| Equipment fuse clip amps | Desired fuse (case) amp size | Catalog no. (pairs) |
|---|---|---|
| 60 | 30 | NO.663-R |
| 100 | 30 | NO.216-R |
| | 60 | NO.616-R |
| 200 | 60 | NO.626-R |
| | 100 | NO.2621-R |
| 400 | 100 | NO.2641-R |
| | 200 | NO.642-R |
| 600 | 100 | NO.2661-R |
| | 200 | NO.2662-R |
| | 400 | NO.2664-R* |

* Single reducer only (pair not required).

## Branch circuit fuse dimensions

### Class CC — in (mm)

LP-CC, FNQ-R, KTK-R and LP-CC

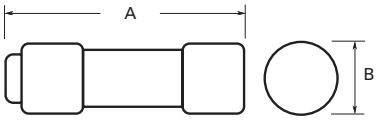


| Amp range | A | B |
|---|---|---|
| Up to 30 | 1.5 (38) | 0.41 (10) |

### Class CF — in (mm)

TCF, FCF and WCF

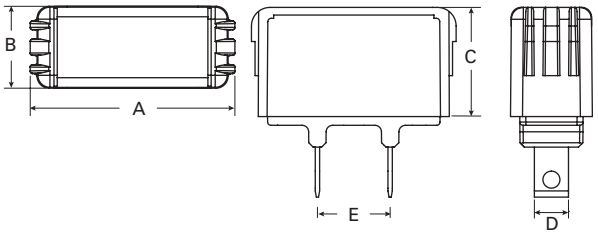


| Amp range | A | B | C | D | E |
|---|---|---|---|---|---|
| 1-15 | 1.88 (48) | 0.75 (19) | 1.0 (25) | 0.23 (6) | 0.67 (17) |
| 17-1/2* | | | | 0.27 (7) | |
| 20 | | | | | |
| 25-30 | | | | 0.31 (8) | |
| 35-40 | 2.13 (54) | 1.0 (25) | 1.13 (29) | 0.36 (9) | |
| 45-50 | | | | 0.44 (11) | |
| 60 | | | | | |
| 70 | 3.01 (76) | | 1.26 (32) | 0.49 (12) | 0.64 (16) |
| 80-90 | | | | | |
| 100 | | | | 0.57 (14) | |

* Time-delay (TCF) only.

### Class J — in (mm)

LPJ and JKS

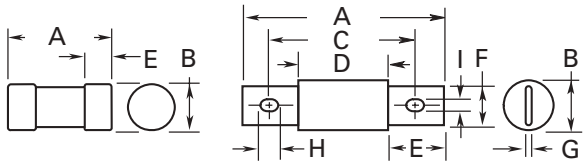


1 to 60A 70 to 600A

| Amp range | A | B | C | D | E | F | G | H | I |
|---|---|---|---|---|---|---|---|---|---|
| 1-30 | 2.25 (57) | 0.81 (21) | — | — | 0.5 (13) | — | — | — | — |
| 35-60 | 2.38 (60) | 1.06 (27) | — | — | 0.63 (16) | — | — | — | — |
| 70-100 | 4.63 (118) | 1.13 (29) | 3.63 (92) | 2.63 (67) | 1.0 (25) | 0.75 (29) | 0.13 (3) | 0.41 (10) | 0.28 (7) |
| 110-200 | 5.75 (146) | 1.63 (41) | 4.38 (111) | 3.0 (76) | 1.38 (35) | 1.13 (29) | 0.19 (5) | 0.38 (10) | 0.28 (7) |
| 225-400 | 7.12 (181) | 2.11 (54) | 5.25 (133) | 3.26 (83) | 1.87 (48) | 1.62 (41) | 0.25 (6) | 0.56 (14) | 0.4 (10) |
| 450-600 | 8.0 (203) | 2.6 (66) | 6.0 (152) | 3.31 (84) | 2.12 (54) | 2.0 (51) | 0.53 (14) | 0.72 (18) | 0.53 (14) |

### Class RK1 and RK5 — in (mm)

FRN-R, KTN-R LPN-RK (250 V) and FRS-R, KTS-R LPS-RK (600 V)

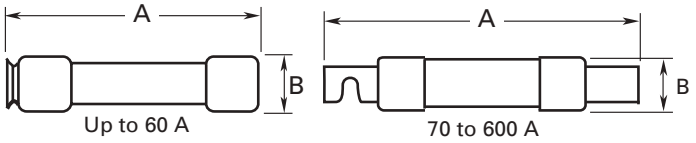


Up to 60 A 70 to 600 A

Basic dimensions are same as Class H, one-time (NON and NOS) fuses. **Note**: relating to dimensional compatibility these fuses can replace existing Class H, RK1 and RK5 fuses.

| | 250 V fuses | | 600 V fuses | |
|---|---|---|---|---|
| Amp range | A | B | A | B |
| Up to 30 | 2 (51) | 0.56 (14) | 5.0 (127) | 0.81 (21) |
| 35-60 | 3 (76) | 0.81 (21) | 5.5 (140) | 1.06 (27) |
| **RK5 FRN-R, FRS-R, — RK1 KTN-R, KTS-R** | | | | |
| 70-100 | 5.88 (149) | 1.06 (27) | 7.88 (200) | 1.34 (34) |
| 110-200 | 7.13 (181) | 1.56 (40) | 9.63 (245) | 1.84 (47) |
| 225-400 | 8.63 (219) | 2.38 (61) | 11.63 (295) | 2.59 (66) |
| 450-600 | 10.38 (264) | 2.88 (73) | 13.38 (340) | 3.13 (80) |
| **RK1 LPN-RK, LPS-RK** | | | | |
| 70-100 | 5.88 (149) | 1.16 (30) | 7.88 (200) | 1.16 (30) |
| 110-200 | 7.13 (181) | 1.66 (42) | 9.63 (245) | 1.66 (42) |
| 225-400 | 8.63 (219) | 2.38 (61) | 11.63 (295) | 2.38 (61) |
| 450-600 | 10.38 (264) | 2.88 (73) | 13.38 (340) | 2.88 (73) |

### Class T — in (mm)

JJN (300 V) and JJS (600 V)

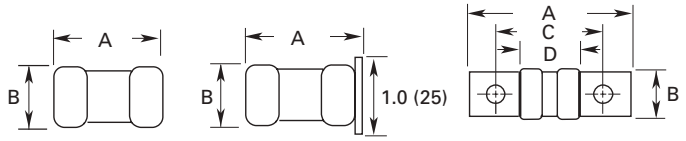


JJN up to 60 A
JJS up to 30 A

JJS 35 to 60 A

JJN 70 to 1200 A
JJS 70 to 800 A

| Amp range | A | B | C | D |
|---|---|---|---|---|
| **300 V JJN** | | | | |
| Up to 30 | 0.88 (22) | 0.41 (10) | — | — |
| 35-60 | 0.88 (22) | 0.56 (14) | — | — |
| 70-100 | 2.16 (55) | 0.75 (19) | 1.56 (40) | 0.84 (21) |
| 110-200 | 2.44 (62) | 0.88 (22) | 1.69 (43) | 0.84 (21) |
| 225-400 | 2.75 (70) | 1.00 (25) | 1.84 (47) | 0.86 (22) |
| 450-600 | 3.06 (78) | 1.25 (32) | 2.03 (52) | 0.88 (22) |
| 601-800 | 3.38 (86) | 1.75 (45) | 2.22 (56) | 0.89 (23) |
| 801-1200 | 4.00 (102) | 2.00 (51) | 2.53 (64) | 1.08 (27) |
| **600 V JJS** | | | | |
| Up to 30 | 1.50 (38) | 0.56 (14) | — | — |
| 35-60 | 1.56 (40) | 0.81 (21) | — | — |
| 70-100 | 2.95 (75) | 0.75 (19) | 2.36 (60) | 1.64 (42) |
| 110-200 | 3.25 (83) | 0.88 (22) | 2.50 (64) | 1.66 (42) |
| 225-400 | 3.63 (92) | 1.00 (25) | 2.72 (69) | 1.73 (44) |
| 450-600 | 3.98 (101) | 1.25 (32) | 2.96 (75) | 1.78 (45) |
| 601-800 | 4.33 (110) | 1.75 (45) | 3.17 (81) | 1.88 (48) |

## Branch circuit fuse dimensions

**Class L — in (mm)**

KLU, KRP-C_SP, KRP-CL, KTU

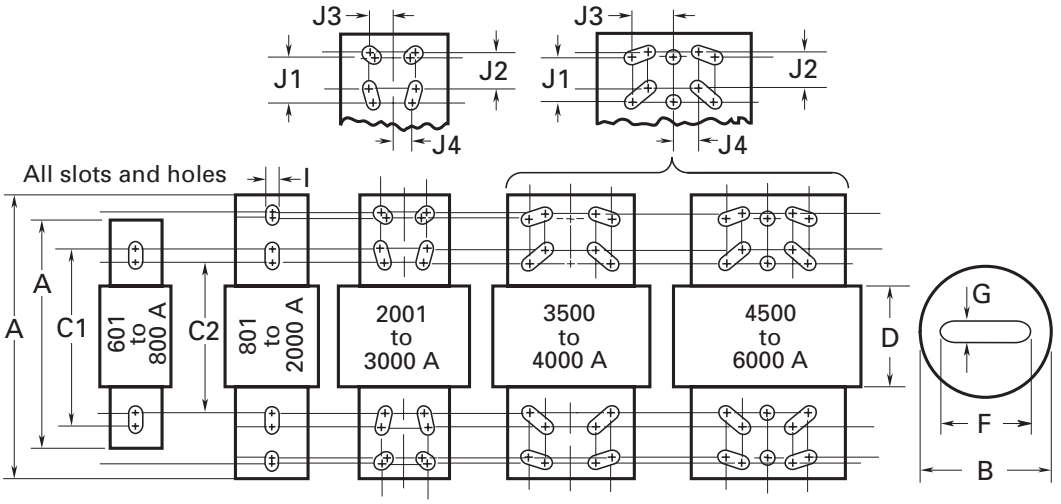


| Amp range | A | B | C1 | C2 | D | F | G | I | J1 | J2 | J3 | J4 |
|---|---|---|---|---|---|---|---|---|---|---|---|---|
| 601-800 | 8.63 (219) | 2.4 (61) | 6.75 (172) | 5.75 (146) | 3.75 (95) | 2.00 (51) | 0.38 (10) | 0.63 (16) | — | — | — | — |
| 801-1200 | 10.75 (273) | 2.4 (61) | 6.75 (172) | 5.75 (146) | 3.75 (95) | 2.00 (51) | 0.38 (10) | 0.63 (16) | — | — | | |
| 1350-1600 | 10.75 (273) | 3.0 (76) | 6.75 (172) | 5.75 (146) | 3.75 (95) | 2.38 (60) | 0.44 (11) | 0.63 (16) | — | — | — | — |
| 1800-2000 | 10.75 (273) | 3.5 (89) | 6.75 (172) | 5.75 (146) | 3.75 (95) | 2.75 (70) | 0.5 (13) | 0.63 (16) | — | — | — | — |
| 2001-2500 | 10.75 (273) | 4.8 (122) | 6.75 (172) | 5.75 (146) | 3.75 (95) | 3.50 (89) | 0.75 (19) | 0.63 (16) | 1.75 (45) | 1.38 (35) | 0.88 (22) | 0.81 (21) |
| 3000 | 10.75 (273) | 5.0 (127) | 6.75 (172) | 5.75 (146) | 3.75 (95) | 4.00 (102) | 0.75 (19) | 0.63 (16) | 1.75 (45) | 1.38 (35) | 0.88 (22) | 0.81 (21) |
| 3500-4000 | 10.75 (273) | 5.75 (146) | 6.75 (172) | 5.75 (146) | 3.75 (95) | 4.75 (121) | 0.75 (19) | 0.63 (16) | 1.75 (45) | 1.38 (35) | 1.63 (41) | 0.88 (22) |
| 4500-5000 | 10.75 (273) | 6.25 (159) | 6.75 (172) | 5.75 (146) | 3.75 (95) | 5.25 (133) | 1.0 (25) | 0.63 (16) | 1.75 (45) | 1.38 (35) | 1.63 (41) | 0.88 (22) |
| 6000 | 10.75 (273) | 7.13 (181) | 6.75 (172) | 5.75 (146) | 3.75 (95) | 5.75 (146) | 1.0 (25) | 0.63 (16) | 1.75 (45) | 1.38 (35) | 1.63 (41) | 0.88 (22) |

**Note**: KRP-CL (225-600 A) fuses have same dimensions as 601-800 A case size KTU (200-600 A) have same dimensions, except tube 3" length x 2" diameter (76 x 51 mm); terminal 1-5/8" width x 1-1/4" thick (41 x 32 mm).

## LP-CC Class CC Low-Peak™ time-delay, rejection-type fuses

Time-delay, current-limiting, rejection-type fuse — 12 seconds (minimum) at 200% rated amps. For dimensions, see page 1-3.

### Ratings

- Volts
  - 600 Vac (or less)
  - 300 Vdc (1/2 to 2-8/10 A and 20-30 A)
  - 150 Vdc (3-15 A)
- Amps 1/2-30 A
- IR
  - 200 kA RMS Sym.
  - 20 kA DC

### Agency information

- UL Listed Std 248-4, Class CC, Guide JDDZ, File E4273, CSA Certified, Class 1422-02, File 53787, RoHS compliant (20-30 A)*, CE

* Contact factory for RoHS compliance on other ratings.

### Features

- Class CC rejection feature, with appropriate fuse block, prevents inserting lesser-rated supplementary fuses
- Time-delay coupled with Class CC current-limiting response provides close sizing on small motor and relay circuits, and maximum component short-circuit current rating protection
- 200 kA interrupting rating provides high ratings for control circuit locations
- Inventory consolidation of 13/32" x 1-1/2" supplemental fuses reduces SKU investment and minimizes potential for misapplying fuse
- Selective coordination ratio of 2:1 (within Low-Peak fuse family) prevents electrical shutdowns from extending beyond the failed circuit

### Typical applications

- Branch circuit protection
- Specialized circuits
- Industrial controls and panels
- Isolated, in-line fuse holder

| Catalog no. (amps) | | | |
|---|---|---|---|
| LP-CC-1/2 | LP-CC-1-8 /10 | LP-CC-4-1/2 | LP-CC-10 |
| LP-CC-6/10 | LP-CC-2 | LP-CC-5 | LP-CC-12 |
| LP-CC-8/10 | LP-CC-2-1/4 | LP-CC-5-6/10 | LP-CC-15 |
| LP-CC-1 | LP-CC-2-1/2 | LP-CC-6 | LP-CC-20 |
| LP-CC-1-1/8 | LP-CC-2-8/10 | LP-CC-6-1/4 | LP-CC-25 |
| LP-CC-1-1/4 | LP-CC-3 | LP-CC-7 | LP-CC-30 |
| LP-CC-1-4/10 | LP-CC-3-2/10 | LP-CC-7-1/2 | |
| LP-CC-1-1/2 | LP-CC-3-1/2 | LP-CC-8 | |
| LP-CC-1-6/10 | LP-CC-4 | LP-CC-9 | |

Recommended holders and blocks for Class CC fuses, see page 1-2.

### Time-current characteristics — average melt

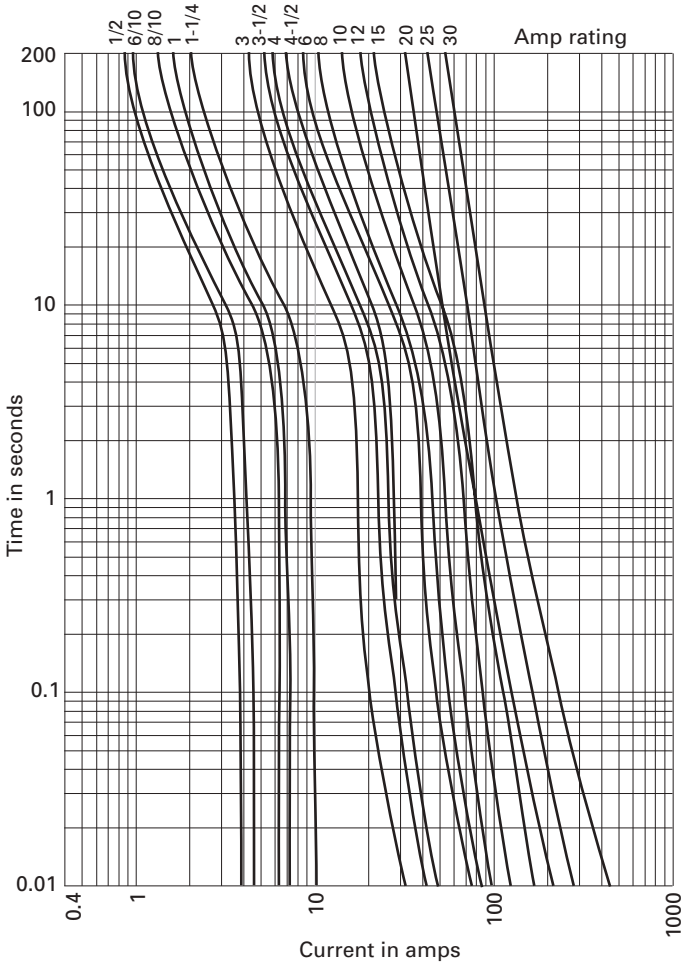


### Current limitation curves

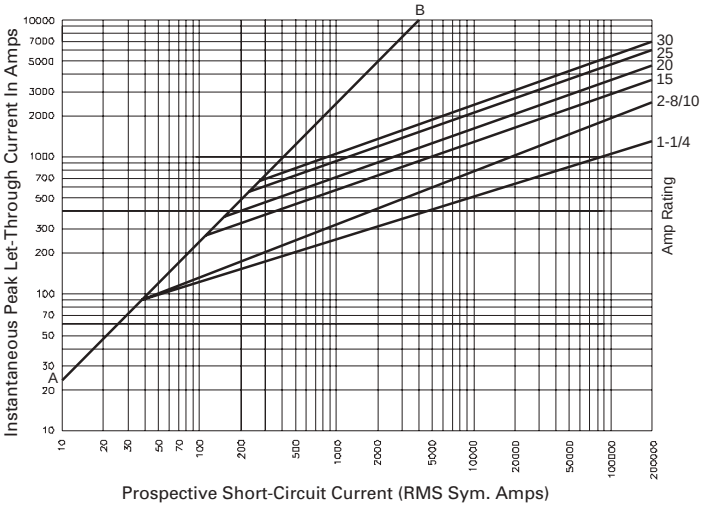


Data sheet no. 1023

## FNQ-R Class CC Limitron™ time-delay, rejection-type fuse

Time-delay, branch circuit, rejection-type fuse. For superior electrical protection, Eaton recommends upgrading FNQ-R fuse applications to Bussmann series Low-Peak LP-CC fuses, see page 1-5. For dimensions, see page 1-3.

### Ratings

- Volts
  - 600 Vac (or less)
  - 300 Vdc (15-20 A)
  - 32 Vdc (self certified)
- Amps 1/4-30 A
- IR
  - 200 kA RMS Sym.
  - 20 kA DC (15 and 20 A only)

### Agency information

- UL Listed, Std 248-4, Class CC, Guide JDDZ, File E4273, CSA Certified, Class 1422-01, File 53787, RoHS compliant, CE

### Features

- Class CC rejection feature, with appropriate fuse block, prevents inserting lesser-rated supplementary fuses
- Time-delay compatible with inrush characteristic of small control transformers
- Current limitation at Class CC levels provides maximum component short-circuit current rating protection
- 200 kA interrupting rating provides high ratings for control circuit locations

### Typical applications

- Line protection, small control transformers
- Industrial controls and panels
- Isolated, in-line fuse holders

| Catalog no. (amps) | | | |
|---|---|---|---|
| FNQ-R-1/4 | FNQ-R-1-3/10 | FNQ-R-3-2/10 | FNQ-R-8 |
| FNQ-R-3/10 | FNQ-R-1-4/10 | FNQ-R-3-1/2 | FNQ-R-9 |
| FNQ-R-4/10 | FNQ-R-1-1/2 | FNQ-R-4 | FNQ-R-10 |
| FNQ-R-1/2 | FNQ-R-1-6/10 | FNQ-R-4-1/2 | FNQ-R-12 |
| FNQ-R-6/10 | FNQ-R-1-8/10 | FNQ-R-5 | FNQ-R-15 |
| FNQ-R-3/4 | FNQ-R-2 | FNQ-R-5-6/10 | FNQ-R-17-1/2 |
| FNQ-R-8/10 | FNQ-R-2-1/4 | FNQ-R-6 | FNQ-R-20 |
| FNQ-R-1 | FNQ-R-2-1/2 | FNQ-R-6-1/4 | FNQ-R-25 |
| FNQ-R-1-1/8 | FNQ-R-2-8/10 | FNQ-R-7 | FNQ-R-30 |
| FNQ-R-1-1/4 | FNQ-R-3 | FNQ-R-7-1/2 | |

Recommended holders and blocks for Class CC fuses, see page 1-2.

### Time-current characteristics — average melt

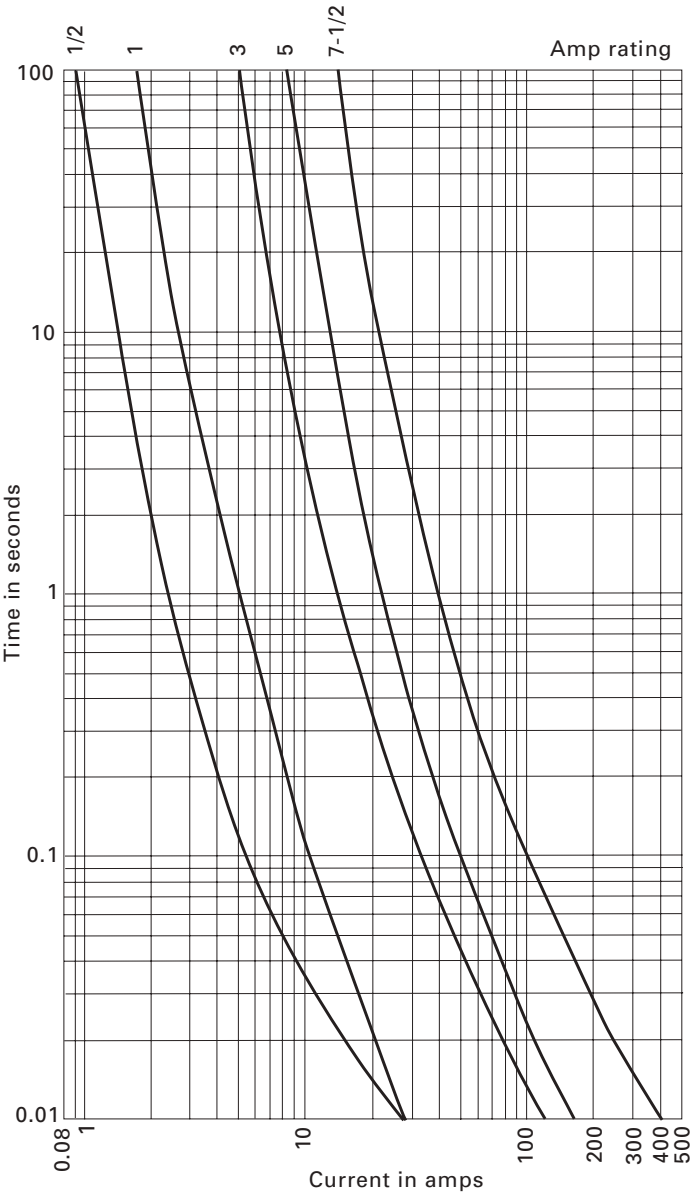


**Data sheet no. 1014**

## KTK-R Class CC Limitron™ fast-acting, rejection-type fuse

Fast-acting, branch circuit, rejection-type fuse. For superior electrical protection, Eaton recommends upgrading KTK-R fuse applications to Bussmann series Low-Peak LP-CC fuses, see page 1-5. For dimensions, see page 1-3.

### Ratings

- Volts 600 Vac (or less)
- Amps 1/10-30 A
- IR 200 kA RMS Sym.

### Agency information

- UL Listed, Std 248-4, Class CC, Guide JDDZ, File E4273, CSA Certified, File 53787, Class 1422-02, RoHS compliant, CE

### Features

- Class CC rejection feature, with appropriate fuse block, prevents inserting lesser-rated supplementary fuses
- Current limitation at Class CC levels provides maximum component short-circuit current protection
- 200 kA interrupting rating provides high ratings for control circuit locations

### Typical applications

- Specialized circuits
- Industrial controls and panels
- Isolated, in-line fuse holders (street lighting)

| Catalog no. (amps) | | | |
|---|---|---|---|
| KTK-R-1/10 | KTK-R-6/10 | KTK-R-3-1/2 | KTK-R-10 |
| KTK-R-1/8 | KTK-R-3/4 | KTK-R-4 | KTK-R-12 |
| KTK-R-2/10 | KTK-R-1 | KTK-R-5 | KTK-R-15 |
| KTK-R-1/4 | KTK-R-1-1/2 | KTK-R-6 | KTK-R-20 |
| KTK-R-3/10 | KTK-R-2 | KTK-R-7 | KTK-R-25 |
| KTK-R-4/10 | KTK-R-2-1/2 | KTK-R-8 | KTK-R-30 |
| KTK-R-1/2 | KTK-R-3 | KTK-R-9 | |

Recommended holders and blocks for Class CC fuses, see page 1-2.

### Time-current characteristics — average melt

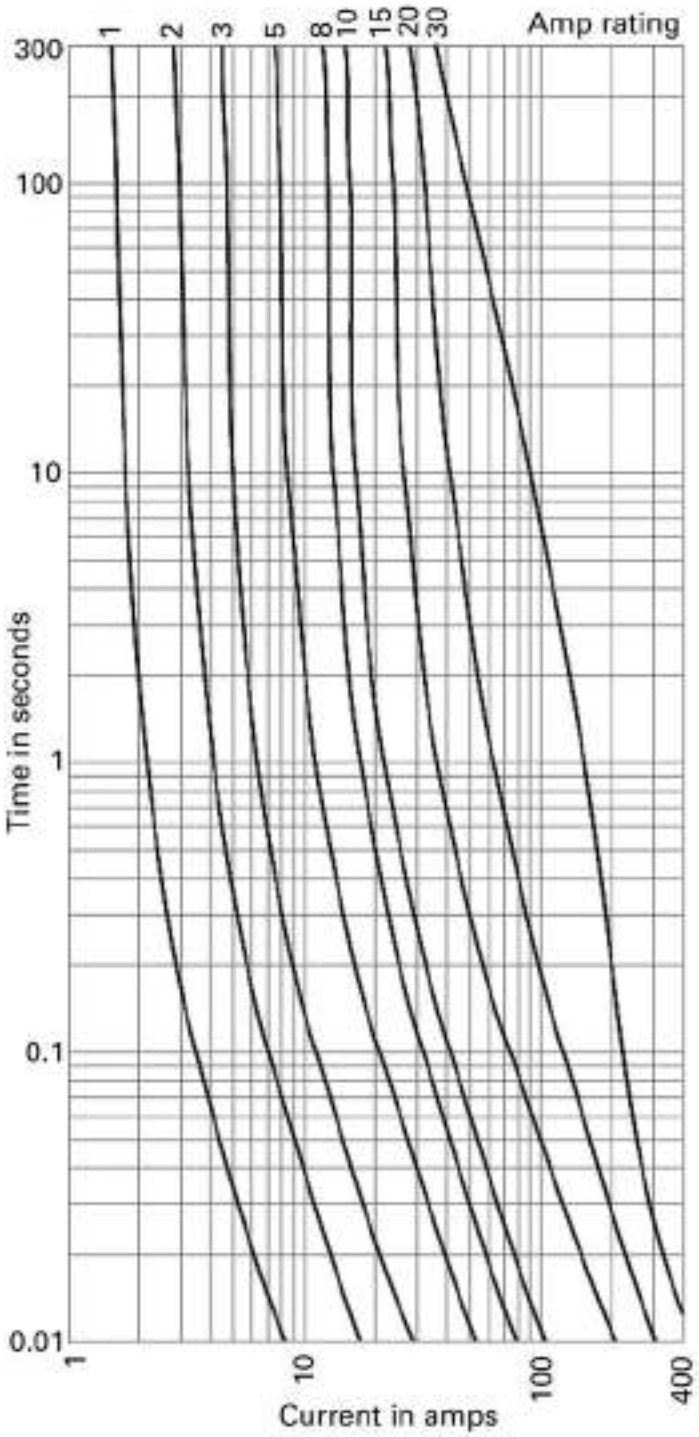




Data sheet no. 1015

## TCF Class CF Low-Peak time-delay CUBEFuse™

Finger-safe fuse and fuse holder system; dual-element, time-delay fuse; 10 seconds minimum operating time at 500% rated amps. Available in indication and non-indication versions. For dimensions, see page 1-3.

### Ratings

- Volts
  - 600 Vac (or less)
  - 300 Vdc (or less)
- Amps 1-100 A
- IR
  - 300 kA RMS Sym. (UL)
  - 200 kA RMS Sym. (CSA)
  - 100 kA DC

RoHS 2011/65/EU

### Agency information

- UL Listed, Guide JDDZ, File E4273, CSA Certified, Class 1422- 02, File 53787, RoHS compliant, CE

### Features

- Smallest installed footprint of any Class CC, J or RK fuse provides substantial space savings and installation flexibility
- IEC 60529 and finger-safe rating provides enhanced workplace safety
- Separate overload and short-circuit elements provide time-delay for sizing of high inrush loads linked with Class J current limitation
- Selective coordination ratio of 2:1 (within Low-Peak fuse family) prevents electrical shutdowns from extending beyond the failed circuit

### Typical applications

- Electrical panelboards
- Machinery disconnects
- Industrial controls and panels
- Required finger-safe systems

| Catalog no. (amps) | | | |
|---|---|---|---|
| **Indicating versions** | | | |
| TCF6 | TCF20 | TCF40 | TCF70 |
| TCF10 | TCF25 | TCF45 | TCF80 |
| TCF15 | TCF30 | TCF50 | TCF90 |
| TCF17-1/2 | TCF35 | TCF60 | TCF100 |
| **Non-indicating versions** | | | |
| TCF1RN | TCF17-1/2RN | TCF40RN | TCF80RN |
| TCF3RN | TCF20RN | TCF45RN | TCF90RN |
| TCF6RN | TCF25RN | TCF50RN | TCF100RN |
| TCF10RN | TCF30RN | TCF60RN | |
| TCF15RN | TCF35RN | TCF70RN | |

Recommended holders for Class CF fuses, see page 1-11.

### Time-current characteristics — average melt

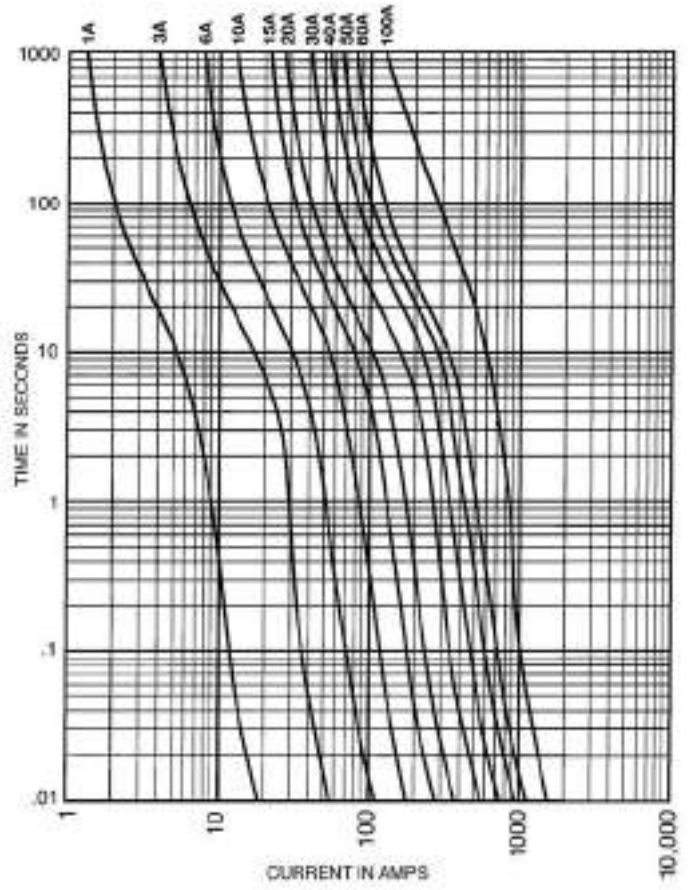


### Current limitation curves

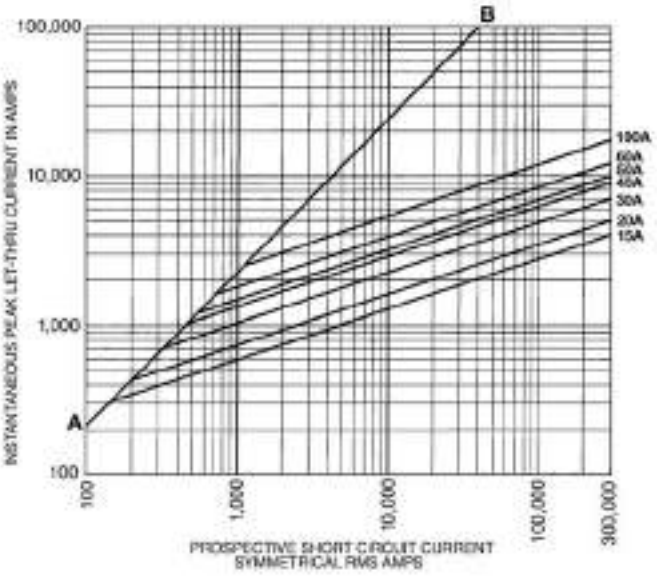


**Data sheet no. 9000 (fuses) and 9007 (holders)**

## FCF Class CF fast-acting CUBEFuse

Finger-safe, non-indicating, fast-acting CUBEFuse for UPS and critical applications with a 4 minute maximum clearing time at 200%, rated current for 1 to 30 A fuse, 6 minute maximum clearing time at 200%, rated current for 35 to 60 A fuse. For dimensions, see page 1-3.

### Ratings

- Volts 600 Vac/dc (or less)
- Amps 1-100 A
- IR
  - 300 kA RMS Sym. (UL up to 60 A)
  - 200 kA RMS Sym. (CSA all ratings and UL 70 to 100 A)
  - 50 kA DC

RoHS 2011/65/EU

### Agency information

- UL Listed, Guide JDDZ, File E4273, CSA Certified, Class 1422- 02, File 53787, RoHS compliant, CE

### Features

- The world's first finger-safe power fast-acting fuse system
- Smallest installed footprint of any class fuse including Class CC, J, and RK
- Class CF meets Class J fast-acting electrical performance requirements
- True fast-acting for faster response to damaging faults to help reduce destructive thermal and magnetic forces
- High interrupting rating to safely interrupt faults up to 300 kA
- No venting of arc or molten metal and gases during opening
- Low let-through currents under fault conditions

| Catalog no. (amps) | | | |
|---|---|---|---|
| FCF1RN | FCF20RN | FCF45RN | FCF90RN |
| FCF3RN | FCF25RN | FCF50RN | FCF100RN |
| FCF6RN | FCF30RN | FCF60RN | |
| FCF10RN | FCF35RN | FCF70RN | |
| FCF15RN | FCF40RN | FCF80RN | |

Recommended holders for Class CF fuses, see page 1-11.

### Time-current characteristics — average melt

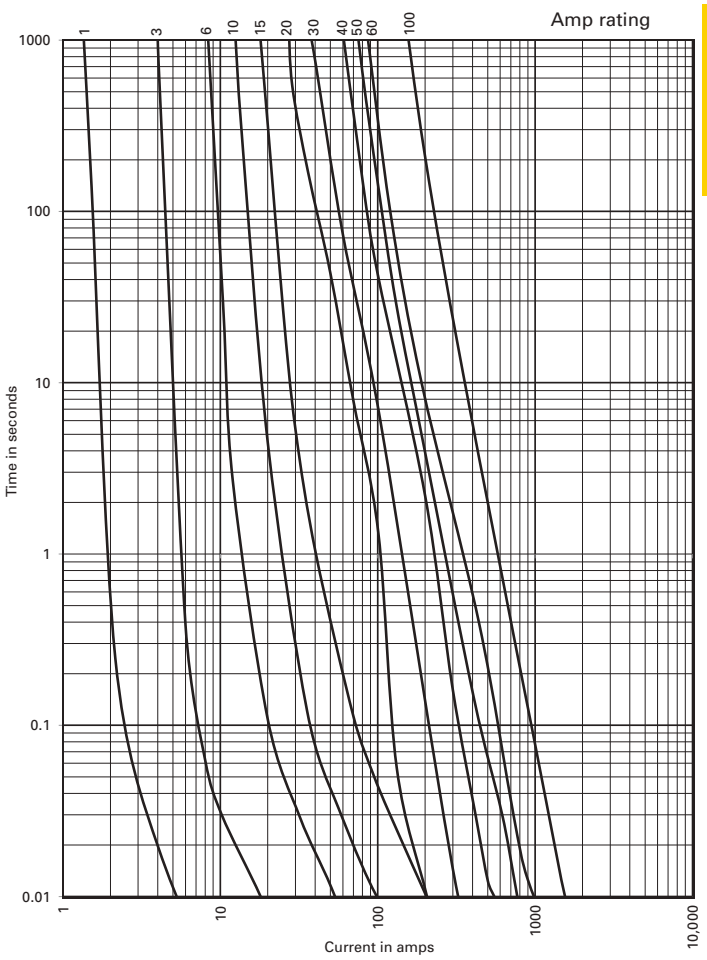


### Current limitation curves

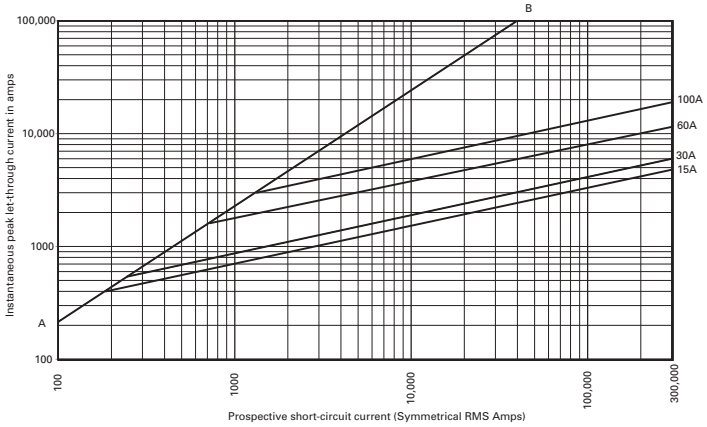




**Data sheet no. 2147 (fuses) and 9007 (holders)**

## WCF fast-acting 690 V wind power CUBEFuse

Finger-safe, non-indicating, fast-acting CUBEFuse for wind power generation systems with a maximum clearing time at 200% rated current: 4 minutes for 1 to 30 amp fuses, 6 minutes for 35 to 60 amp fuses, 8 minutes for 70 to 100 amp fuses. For dimensions, see page 1-3.

### Ratings

- Volts 690 Vac
- Amps 1-100 A
- IR
  - 50 kA AC (1-60 A)
  - 30 kA AC (70-100 A)

RoHS 2011/65/EU

### Agency information

- UL Recognized, Guide JFHR2, File E56412, cURus Component Certified C22.2, RoHS compliant, CE

### Features

- Maximize uptime and reliability using fuses designed and listed to UL 248-1
- Minimize chances of equipment failure and personnel injury when using full range fuses having the industry's fastest response time to low-magnitude faults
- Maximize return on investment with fuses proven to withstand harsh temperatures
- Minimize design time, operating outage time and replacement cost with fuses qualified in excessively changing environmental conditions
- Simplify compatibility with readily available industry standard holders
- Temperature derating — Designed to maximize rated capacity in elevated environmental temperatures
- Overload protection — Proven to clear faults faster than the UL requirement
- Power loss — Minimal energy consumption leading to increased efficiency

### Typical application

- Protecting wind system transformers, pitch and speed controls, and turbine HVAC and lighting

| Catalog no. (amps) | | | | |
|---|---|---|---|---|
| WCF1RN | WCF15RN | WCF35RN | WCF60RN | WCF100RN |
| WCF3RN | WCF20RN | WCF40RN | WCF70RN | WCF100RN |
| WCF6RN | WCF25RN | WCF45RN | WCF80RN | |
| WCF10RN | WCF30RN | WCF50RN | WCF90RN | |

Recommended holders for WCF fuses, see page 1-11.

### Watts loss at rated current

| Amps | Fuse catalog no. | Watts |
|---|---|---|
| 15 | WCF15RN | 3.48 |
| 30 | WCF30RN | 5.45 |
| 60 | WCF60RN | 7.27 |
| 100 | WCF100RN | 11.5 |

### Operating and storage temperature range

-40°C to 90°C

### Mounting

The wind CUBEFuse must be mounted in the 690 V WCF holders that are rated for 690 volts. Not to be installed in the CCP2-CF or CCP2B disconnect switches. See page 1-11.

### Time-current characteristic curves — average melt

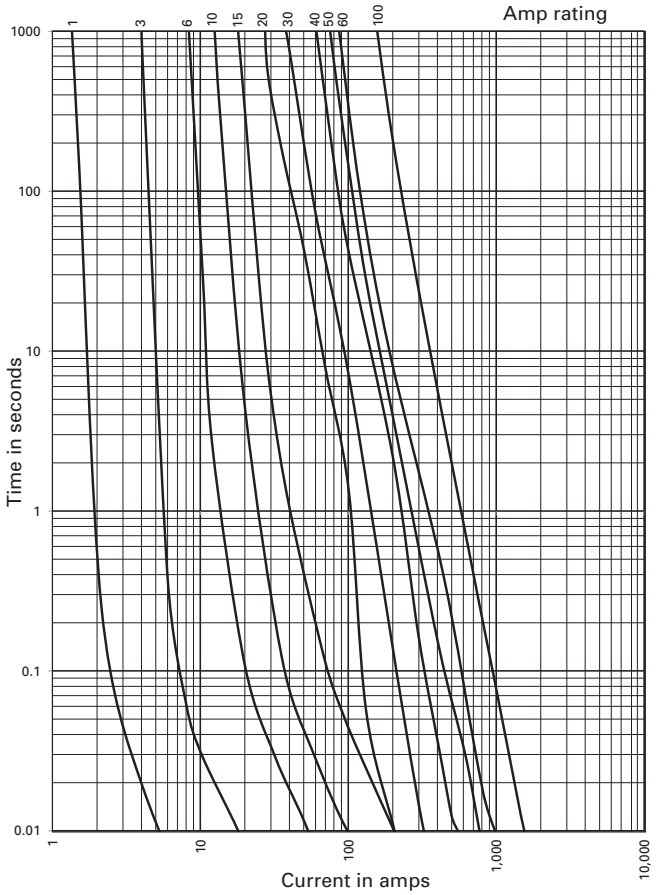


### Current limitation curves

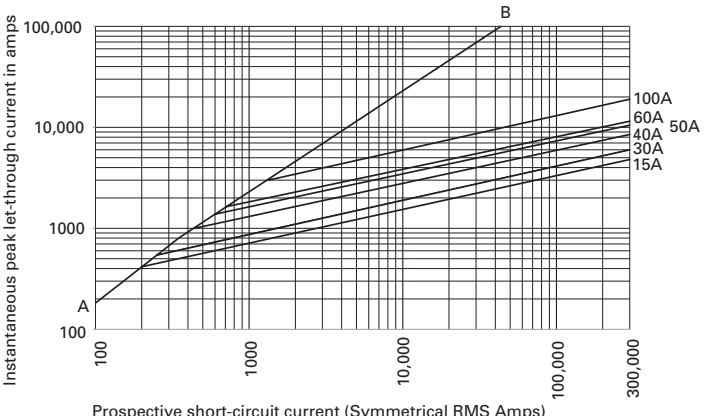


### Data sheet no. 9009 (fuses) and 9007 (holders)

## CUBEFuse™ finger-safe fuse holders

Gangable, finger-safe one-pole holders available in ratings of 30, 60 and 100 amps. All holders, regardless of amp rating, can be ganged together using an interlocking dovetail to create the desired number of poles. Each holder can accept a CUBEFuse of equal or less amps. Wind CUBEFuse (WCF) must be mounted in 690 V rated versions. See catalog number table.

### Ratings

RoHS 2011/65/EU

- Volts
  - 600 V (UL, CSA TCFH_N)
  - 690 V (cURus TCFH_NW)
- Amps 30, 60, 100 A
- Withstand rating
  - 300 kA RMS Sym. (UL)
  - 200 kA RMS Sym. (CSA)
  - 100 kA DC (UL and CSA)
  - 50 kA AC (cURus, 1-60 A TCFH_NW)

### Agency information

- UL Listed, Guide IZLT, File E14853 (600 V)
- UL Recognized, Guide IZLT2, File E14853 (690 V)
- CSA Certified, Class 6225-01, File 47235, cURus Component Certified
- CE
- RoHS compliant

### Mounting

- 35 mm DIN-Rail
- Panel mount

### Operating and storage temperature range

- -40°C to 80°C

| Catalog no. | Volts | Amps | Accepts fuse amp range |
|---|---|---|---|
| TCFH30N | 600 | 30 | 1-30 |
| TCFH60N | | 60 | 1-60 |
| TCFH100N | | 100 | 1-100 |
| TCFH30NW | 690 | 30 | 1-30 |
| TCFH60NW | | 60 | 1-60 |
| TCFH100NW | | 100 | 1-100 |

### CUBEFuse™ holder fuse applications

| Holder catalog no. | Volts | CUBEFuse type and amp range | | |
|---|---|---|---|---|
| | | TCF and TCF_RN | FCF_RN | WCF_RN |
| TCFH30N | 600 | 1-30 | 1-30 | — |
| TCFH60N | | 1-60 | 1-60 | |
| TCFH100N | | 1-100 | 1-100 | |
| TCFH30NW | 690 | — | — | 1-30 |
| TCFH60NW | | | | 1-60 |
| TCFH100NW | | | | 1-100 |

### Terminal torque and conductor ratings

Ratings are for 75°C Cu AWG conductors. Table values are expressed in AWG range, followed by torque in N•m followed by lb-in in parentheses.

| Terminal wire rating | Holder catalog no. | | |
|---|---|---|---|
| | TCFH30N / TCFH30NW | TCFH60N / TCFH60NW | TCFH100N / TCFH100NW |
| Single | 8-10 / 2.8 (25)<br>12-18 / 2.6 (20) | 10-14 / 2.6 (20)<br>4-8 / 3.9 (35) | 10-18 / 2.6 (20)**<br>1-8 / 4.5 (40)† |
| Dual | 10-18 / 2.8 (25)* | 10-18 / 2.6 (20)<br>6-8 / 3.9 (35) | 6 / 5.1 (45)† |

* 10-18 AWG stranded, 14-18 AWG solid
**Solid and stranded

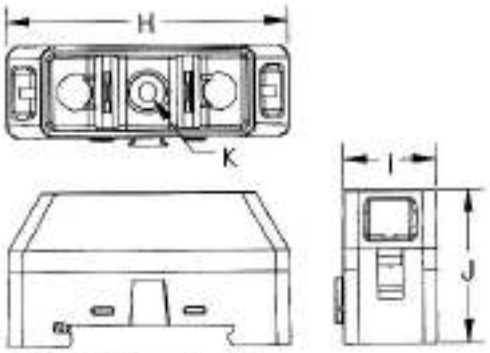


30 and 60 amp holders

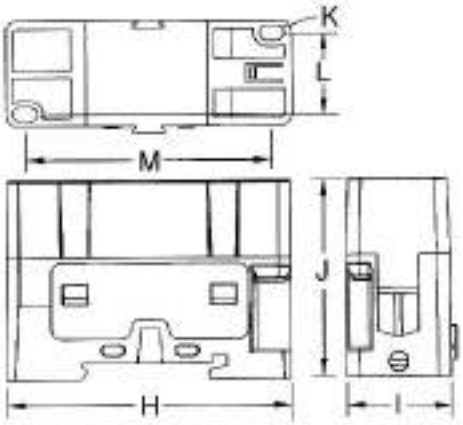


100 amp holder

† Stranded

### Dimensions — in (mm)

| Amps | Amp range | Wire* range - single (dual) | H | I | J | K | L | M | Max height with fuse |
|---|---|---|---|---|---|---|---|---|---|
| 30 | 1-30 | 14-8 (14-10) | 2.3 (58) | 0.76 (19) | 1.36 (34) | 0.15 (4) | — | — | 2.36 (60) |
| 60 | 1-60 | 14-4 (10-6) | 2.6 (66) | 1.03 (26) | 1.60 (41) | 0.17 (4) | — | — | 2.73 (69) |
| 100 | 1-100 | 10-1 (6) | 2.91 (74) | 1.05 (27) | 2.01 (51) | 0.15 (4) | 0.80 (20) | 2.51 (64) | 3.27 (83) |

* 75°C Cu AWG.

Data sheet no. 9007

## SC Class G general purpose fuses

Fast-acting (1/2-6 A) and time-delay (7-60 A) Class G fuses. SC fuses are size rejecting measuring 13/32" in diameter by various lengths associated with their amp rating ranging from 1-5/16" to 2-1/4". This feature helps prevent overfusing. See the catalog numbers table for length by amp rating.

### Ratings

- Volts
  - 600 Vac (1/2-20 A)
  - 480 Vac (25-60 A)
  - 170 Vdc (1/2-20 A)
  - 300 Vdc (25-60 A)
- Amps 1/2-60 A
- IR
  - 100 kA RMS Sym.
  - 10 kA DC

RoHS 2011/65/EU

### Agency information

- UL Listed Std 248-5, Class G, Guide JDDZ, File E4273, CSA Certified, Class 1422-01, File 53787, RoHS compliant, CE

### Features

- Class G current limiting for component and branch circuit protection
- 100 kA interrupting rating provides cost-effective branch circuit fusing for systems with high short-circuit current levels
- Rejection feature with variations in length helps prevent overfusing

### Typical applications

- Fusible branch circuit panelboards
- HVAC branch circuit protection

| Catalog no. (amps) and length | | | |
|---|---|---|---|
| 1-5/16" | 1-13/32" | 1-5/8" | 2-1/4" |
| SC-1/2 | SC-20 | SC-25 | SC-35 |
| SC-1 | | SC-30 | SC-40 |
| SC-1-1/2 | | | SC-45 |
| SC-2 | | | SC-50 |
| SC-2-1/2 | | | SC-60 |
| SC-3 | | | |
| SC-4 | | | |
| SC-5 | | | |
| SC-6 | | | |
| SC-7 | | | |
| SC-8 | | | |
| SC-10 | | | |
| SC-12 | | | |
| SC-15 | | | |

Recommended holders and blocks for Class G fuses, see page 1-2.

### Time-current characteristics — average melt

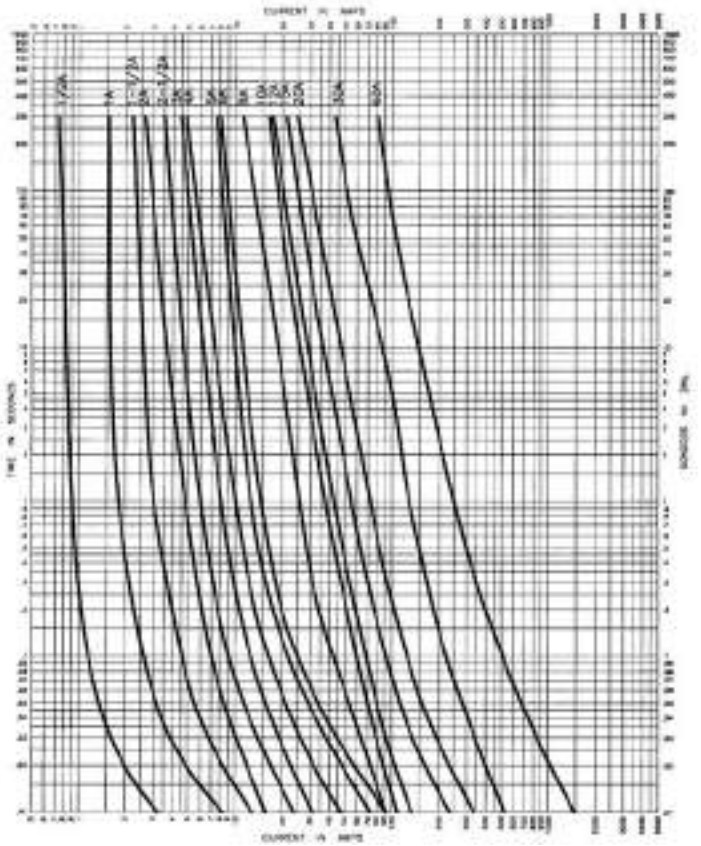

### Current limitation curves

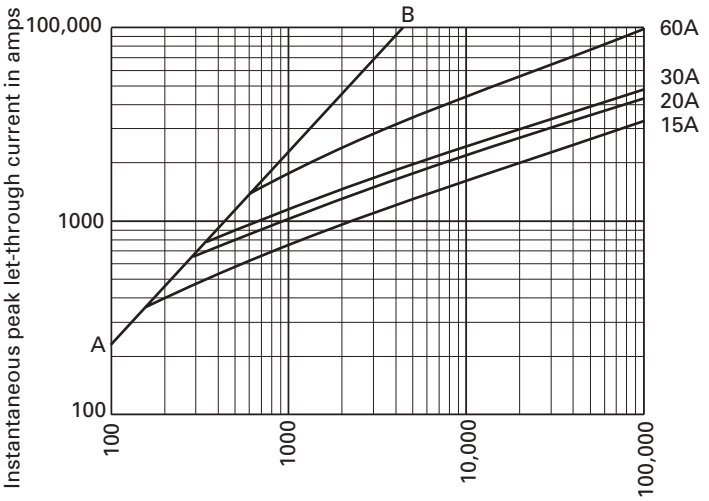


**Data sheet no. 1024**

## LPJ_SP Class J Low-Peak dual-element, time-delay fuses

Dual-element, time-delay Class J fuse; 10 seconds (minimum) at 500% rated amps, available with optional indication on select ratings (see catalog numbers table). For dimensions, see page 1-3.

### Ratings

- Volts
  - 600 Vac (or less)
  - 300 Vdc (or less)*
- Amps 1-600 A
- IR
  - 300 kA RMS Sym.
  - 100 kA DC

* Does not apply to indicating versions.

### Agency information

- UL Listed, Guide JDDZ, File E4273, CSA Certified Class J per CSA 22.2 No 248.8, Class 1422-02, File 53787, RoHS compliant, CE

### Features

- Separate overload and short-circuit elements provide time delay for sizing of high inrush loads linked with Class J current limitation
- Selective coordination ratio of 2:1 (within Low-Peak fuse family) prevents electrical shutdowns from extending beyond the failed circuit
- Series combination ratings with branch circuit breakers allows broad range of coverage, independent of breaker manufacturer

### Typical applications

- Power panelboards
- Branch circuit breaker panelboard mains
- Machinery disconnects
- Industrial control

| Catalog no. (amps) | | | |
|---|---|---|---|
| LPJ-1SP | LPJ-4-1/2SP | LPJ-25SP* | LPJ-125SP* |
| LPJ-1-1/4SP | LPJ-5SP | LPJ-30SP* | LPJ-150SP* |
| LPJ-1-6/10SP | LPJ-5-6/10SP | LPJ-35SP* | LPJ-175SP* |
| LPJ-1-8/10SP | LPJ-6SP* | LPJ-40SP* | LPJ-200SP* |
| LPJ-2SP | LPJ-7SP* | LPJ-45SP* | LPJ-225SP* |
| LPJ-2-1/4SP | LPJ-8SP* | LPJ-50SP* | LPJ-250SP* |
| LPJ-2-1/2SP | LPJ-9SP* | LPJ-60SP* | LPJ-300SP* |
| LPJ-2-8/10SP | LPJ-10SP* | LPJ-70SP* | LPJ-350SP* |
| LPJ-3SP | LPJ-12SP* | LPJ-80SP* | LPJ-400SP* |
| LPJ-3-2/10SP | LPJ-15SP* | LPJ-90SP* | LPJ-450SP* |
| LPJ-3-1/2SP | LPJ-17-1/2SP* | LPJ-100SP* | LPJ-500SP* |
| LPJ-4SP | LPJ-20SP* | LPJ-110SP* | LPJ-600SP* |

*Available with optional permanent replace fuse indication To order, place "I" at end of catalog number Example: LPJ-6SPI.
Available with silver plated terminals Add SP/ in front of catalog number.

Recommended holders and blocks for Class J fuses, see page 1-2.

### Time-current characteristics — average melt

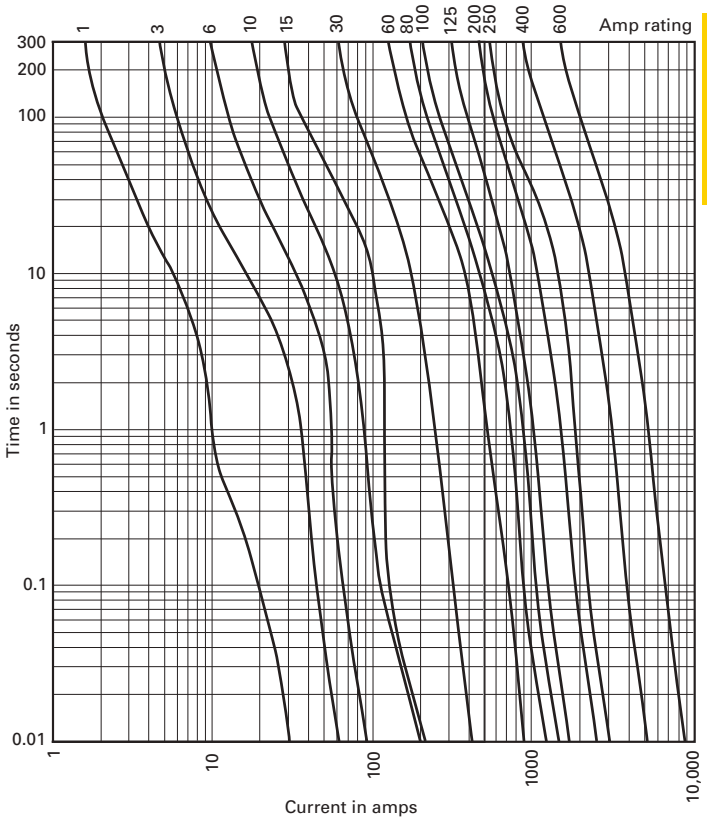


### Current limitation curves

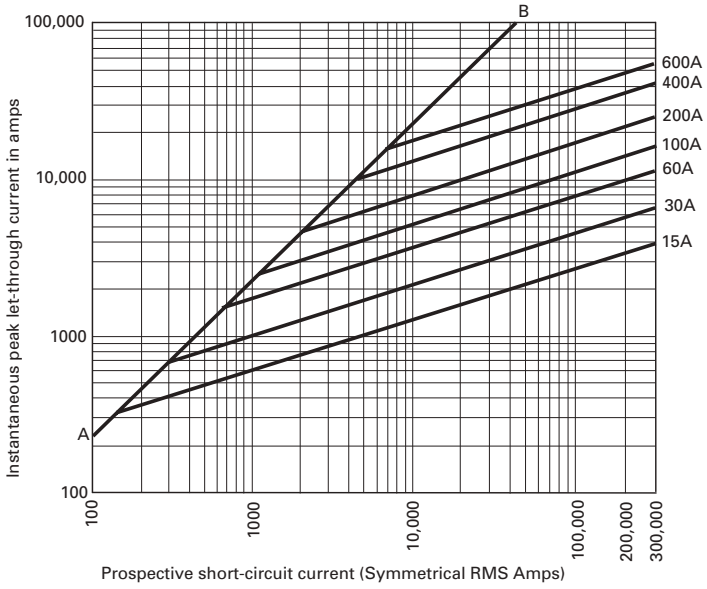




**Data sheet no. 1006 (0-60 A) and 1007 (70-600 A)**

## JKS Class J Limitron™ fast-acting fuses

Fast-acting, Class J current-limiting fuse. For superior electrical protection, Eaton recommends upgrading JKS fuse applications to Bussmann series Low-Peak LPJ fuses See page 1-13. For dimensions, see page 1-3.

### Ratings

- Volts 600 Vac (or less)
- Amps 1-600 A
- IR 200 kA RMS Sym.

### Agency information

- 600 Vac, UL Listed, Std. 248-8, Class J, Guide JDDZ, File E4273, CSA Certified, Class 1422-02, File 53787, CE

### Features

- Current limitation for non-inductive circuits provides Class J current-limiting response to maximum ground fault and short-circuit conditions
- 200 kA interrupting rating provides protection at all circuit locations
- Economical circuit protection for high-fault current circuits

### Typical applications

- Power panelboards
- Machinery disconnects

| Catalog no. (amps) | | | |
|---|---|---|---|
| JKS-1 | JKS-15 | JKS-70 | JKS-225 |
| JKS-2 | JKS-20 | JKS-80 | JKS-250 |
| JKS-3 | JKS-25 | JKS-90 | JKS-300 |
| JKS-4 | JKS-30 | JKS-100 | JKS-350 |
| JKS-5 | JKS-35 | JKS-110 | JKS-400 |
| JKS-6 | JKS-40 | JKS-125 | JKS-450 |
| JKS-8 | JKS-45 | JKS-150 | JKS-500 |
| JKS-10 | JKS-50 | JKS-175 | JKS-600 |
| JKS-12 | JKS-60 | JKS-200 | |

Recommended holders and blocks for JKS Class J fuses, see page 1-2.

### Time-current characteristics — average melt

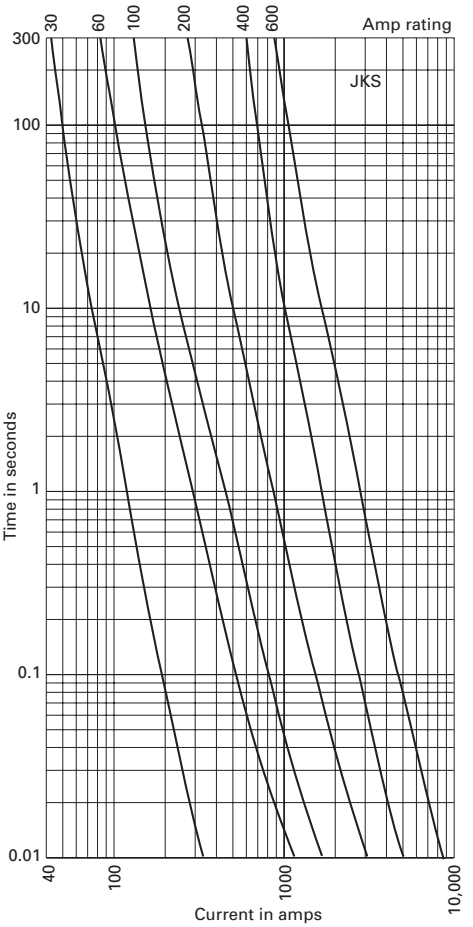


### Current limitation curves

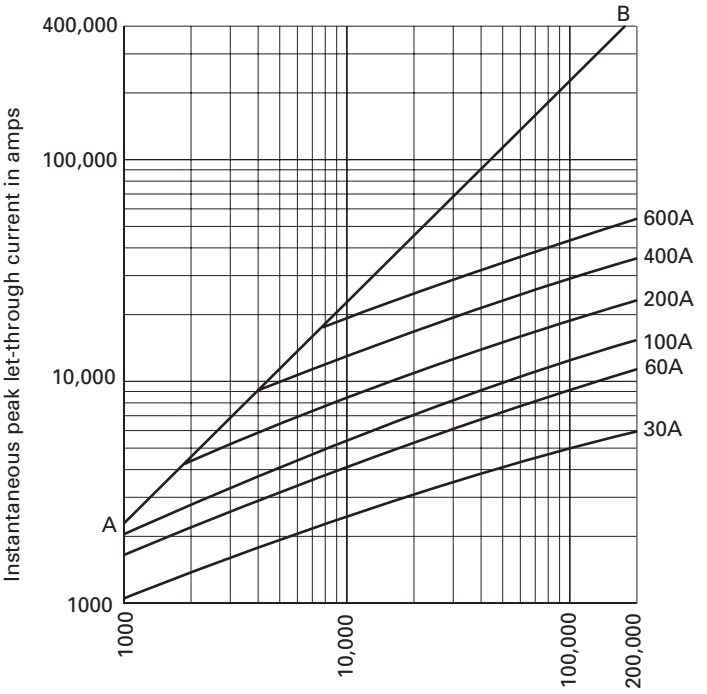


**Data sheet no. 1026 (1-60 A) and 1027 (70-600 A)**

## NON and NOS Class K5/H general purpose one-time fuses

General purpose, Class K5 and H non-current-limiting fuse 250 V NON and 600 V NOS fuses. For superior electrical protection, Eaton recommends upgrading NON (250 Vac) and NOS (600 Vac) fuse applications to Bussmann series Low-Peak LPN-RK (250 Vac) and LPS-RK (600 Vac) fuses, see page 1-18. For dimensions, see page 1-3.

### Ratings

- Volts
  - NON
    - 250 Vac
    - 125 Vdc (0-100 A)
  - NOS
    - 600 Vac
- Amps 1/8-600 A
- IR
  - 50 kA RMS Sym. (NON and NOS 0-60 A)
  - 10 kA RMS Sym. (NON and NOS 65-600 A)
  - 50 kA @ 125 Vdc (NON 0-60 A)
  - 10 kA @ 125 Vdc (NON 65-100 A)

### Agency information

- UL Listed
  - 250 V Class K5 (0-60 A), Std 248-9, Class H (65-600 A), Std 248-6, (125 Vac, NON 0-100 A)
  - 600 V Class K5 (0-60 A), Std 248-9, Class H (70-600 A), Std 248-6, Guide JDDZ, File E4273
- CSA Certified
  - 250 V (0-12, 65-600 A)†
  - 600 V (0-600 A), Class 1421-01, File 53787
- CE

† For CSA Certified 15-60 A ratings, see PON in Section 5, page 2.

### Features

- Basic overcurrent protection.

### Typical applications

- Light duty circuit locations

| Catalog no. (amps) | | | |
|---|---|---|---|
| **250 V NON** | | | |
| NON-1/8 | NON-5 | NON-40 | NON-175 |
| NON-1/2 | NON-6 | NON-45 | NON-200 |
| NON-3/4 | NON-6-1/4 | NON-50 | NON-225 |
| NON-8/10 | NON-7 | NON-60 | NON-250 |
| NON-1 | NON-8 | NON-65 | NON-300 |
| NON-1-1/4 | NON-9 | NON-70 | NON-350 |
| NON-1-1/2 | NON-10 | NON-75 | NON-400 |
| NON-1-6/10 | NON-12 | NON-80 | NON-450 |
| NON-2 | NON-15 | NON-90 | NON-500 |
| NON-2-1/2 | NON-20 | NON-100 | NON-600 |
| NON-3 | NON-25 | NON-110 | |
| NON-3-2/10 | NON-30 | NON-125 | |
| NON-4 | NON-35 | NON-150 | |
| **600 V NOS** | | | |
| NOS-1 | NOS-12 | NOS-70 | NOS-200 |
| NOS-2 | NOS-15 | NOS-75 | NOS-225 |
| NOS-3 | NOS-20 | NOS-80 | NOS-250 |
| NOS-4 | NOS-25 | NOS-90 | NOS-300 |
| NOS-5 | NOS-30 | NOS-100 | NOS-350 |
| NOS-6 | NOS-35 | NOS-110 | NOS-400 |
| NOS-7 | NOS-40 | NOS-125 | NOS-450 |
| NOS-8 | NOS-45 | NOS-150 | NOS-500 |
| NOS-9 | NOS-50 | NOS-175 | NOS-600 |
| NOS-10 | NOS-60 | | |

### Recommended fuse reducers

| 250 V | | | 600 V | | |
|---|---|---|---|---|---|
| Fuse amps | Clip amp size | Catalog no. (pair) | Fuse amps | Clip amp size | Catalog no. (pair) |
| 30 | 60 | NO.263 | 30 | 60 | NO.663 |
| 30 | 100 | NO.213 | 30 | 100 | NO.216 |
| 60 | 100 | NO.216 | 60 | 100 | NO.616 |
| 60 | 200 | NO.226 | 60 | 200 | NO.626 |
| 100 | 200 | NO.2621 | 100 | 200 | NO.2621 |
| 100 | 400 | NO.2641 | 100 | 400 | NO.2641 |
| 200 | 400 | NO.2642 | 200 | 400 | NO.2642 |
| 100 | 600 | NO.2661 | 100 | 600 | NO.2661 |
| 200 | 600 | NO.2662 | 200 | 600 | NO.2662 |
| 400 | 600 | NO.2664 | 400 | 600 | NO.2664 |

Recommended blocks for Class K5 and H fuses, see page 1-2.

## KRP-C_SP Class L Low-Peak time-delay fuses

Time-delay Class L fuses — 4 seconds (minimum) at 500% rated amps. Use KRP-CL for current ratings under 601 A. For dimensions, see page 1-4.

### Ratings

- Volts
  - 600 Vac (or less)
  - 300 Vdc (601-2000 A, 3000 A)
- Amps 601-6000 A
- IR
  - 300 kA RMS Sym.
  - 100 kA DC

### Agency information

- UL Listed 248-10, Guide JFHR, File E56412, CSA Certified, Class 1422-02, File 53787, Class L per CSA C22.2, No 248.10, RoHS compliant, CE

### Features

- Time-delay of 4 seconds at 5 times rating allows closer sizing on large motor loads combined with Class L current limitation
- Selective coordination ratio of 2:1 (within Low-Peak fuse family) prevents electrical shutdowns from extending beyond the failed circuit
- Interrupting rating of 300 kA RMS symmetrical provides adequate ratings without obsolescence for all electrical systems, big or small
- Quality construction, using high-grade materials, provides lower watts loss and operating temperatures with superior arc quenching during current-limiting action

### Typical applications

- Large distribution switchboards
- Power panelboards
- Large machinery disconnects

| Catalog no. (amps) | | | |
|---|---|---|---|
| KRP-C-601SP | KRP-C-1000SP | KRP-C-1800SP | KRP-C-3500SP |
| KRP-C-650SP | KRP-C-1100SP | KRP-C-1900SP | KRP-C-4000SP |
| KRP-C-700SP | KRP-C-1200SP | KRP-C-2000SP | KRP-C-4500SP |
| KRP-C-750SP | KRP-C-1350SP | KRP-C-2001SP | KRP-C-5000SP |
| KRP-C-800SP | KRP-C-1400SP | KRP-C-2400SP | KRP-C-6000SP |
| KRP-C-801SP | KRP-C-1500SP | KRP-C-2500SP | |
| KRP-C-900SP | KRP-C-1600SP | KRP-C-3000SP | |

Recommended blocks for Class L fuses, see page 1-2.

### Time-current characteristics — average melt

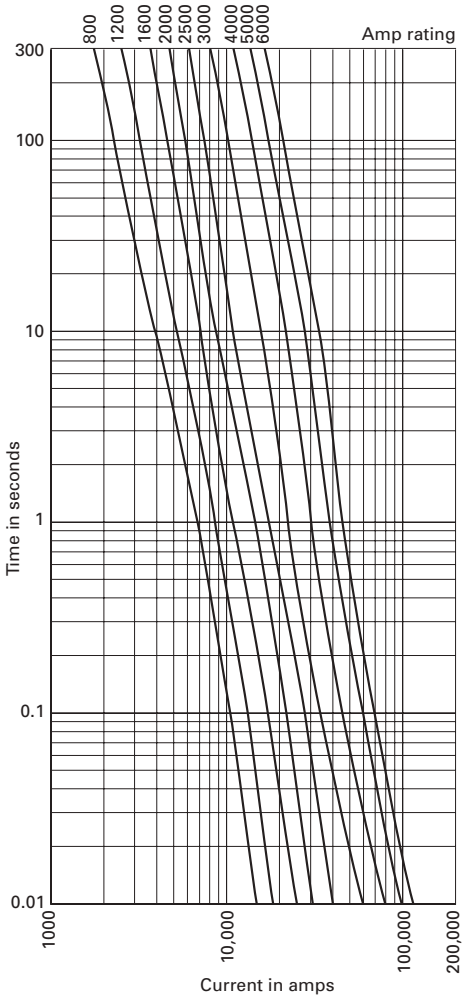


### Current limitation curves

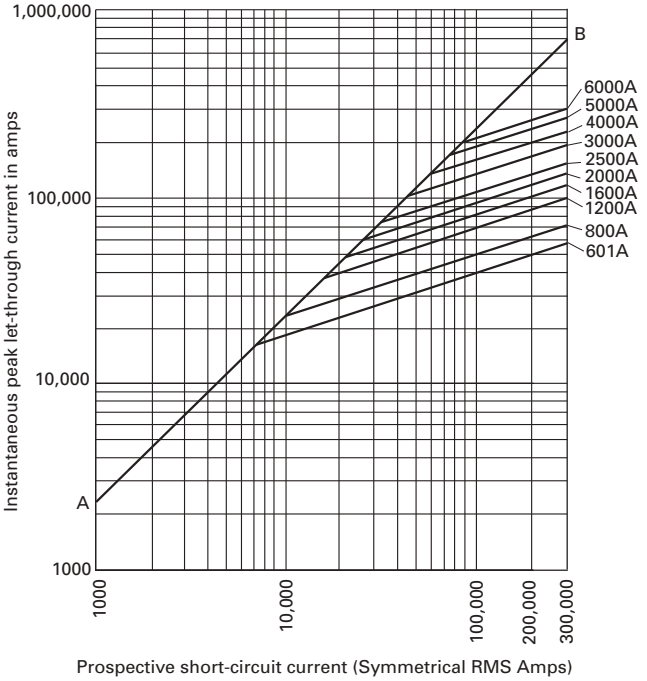


**Data sheet no. 1008(601-2000 A) and 1009 (2001-6000 A)**

## KRP-CL current-limiting, time-delay fuses

Current-limiting, time-delay fuse with Class L dimensions for the 601-800 A case size. For dimensions, see page 1-4.

### Ratings

- Volts 600 Vac (or less)
- Amps 225-600 A
- IR 200 kA RMS Sym.

### Agency information

- RoHS compliant

### Features

- Time-delay of 4 seconds at 5 times rating allows closer sizing inductive loads coupled with an equivalent Class L current limitation
- 601 to 800 A Class L case size permits applying circuit protection from 225 to 600 A for downsize fusing of 800 amp Class L fused switches

### Typical applications

- Large distribution switchboards
- Power panelboards
- Machinery disconnects

| Catalog no. (amps) | | | |
|---|---|---|---|
| KRP-CL-225 | KRP-CL-300 | KRP-CL-400 | KRP-CL-500 |
| KRP-CL-250 | KRP-CL-350 | KRP-CL-450 | KRP-CL-600 |

Recommended blocks for Class L fuses, see page 1-2.

## KTU Class L Limitron fast-acting fuses

Fast-acting, Class L fuses. For superior electrical protection, Eaton recommends upgrading KTU fuse applications to Bussmann series Low-Peak KRP-C fuses, see page 1-16. For dimensions, see page 1-4.

### Ratings

- Volts 600 Vac (or less)
- Amps 601-6000 A
- IR 200 kA RMS Sym.

### Agency information

- UL Listed, Std 248-10, Class L, Guide JDDZ, File E4273, CSA Certified, Class 1422-02, File 53787, RoHS compliant, CE

### Features

- 200 kA interrupting rating provides protection at all circuit locations
- Economical protection for high-fault current circuits
- Quality construction using high-grade materials provides lower watts loss and operating temperatures with superior arc quenching during current-limiting action

### Typical applications

- Large distribution switchboards
- Power panelboards

| Catalog no. (amps) | | | |
|---|---|---|---|
| KTU-601 | KTU-850 | KTU-1500 | KTU-2500 |
| KTU-650 | KTU-900 | KTU-1600 | KTU-3000 |
| KTU-700 | KTU-1000 | KTU-1800 | KTU-3500 |
| KTU-750 | KTU-1100 | KTU-2000 | KTU-4000 |
| KTU-800 | KTU-1200 | KTU-2001 | KTU-5000 |
| KTU-801 | KTU-1400 | KTU-2400 | KTU-6000 |

Recommended blocks for Class L fuses, see page 1-2.

## KLU Class Limitron time-delay fuses

Time-delay, Class L fuses - 5 seconds (minimum) at 500% rated amps. For superior electrical protection, Eaton recommends upgrading KLU fuse applications to Bussmann series Low-Peak KRP-C fuses, see page 1-16. Use KRP-CL for current ratings under 601 A. For dimensions, see page 1-4.

### Ratings

- Volts 600 Vac (or less)
- Amps 601-4000 A
- IR 200 kA RMS Sym.

### Agency information

- UL Listed, Std 248-10, Class L, Guide JDDZ, File E4273, CSA Certified, CSA Class 1422-02, File 53787, RoHS compliant, CE

### Features

- 200 kA interrupting rating provides protection at all circuit locations
- Economical protection for high-fault current circuits

### Typical applications

- Large distribution switchboards
- Power panelboards
- Large machinery disconnects

| Catalog no. (amps) | | | |
|---|---|---|---|
| KLU-601 | KLU-1000 | KLU-1800 | KLU-4000 |
| KLU-650 | KLU-1200 | KLU-2000 | |
| KLU-700 | KLU-1500 | KLU-2500 | |
| KLU-800 | KLU-1600 | KLU-3000 | |

Recommended blocks for Class L fuses, see page 1-2.

## LPN-RK_SP (250 V) and LPS-RK_SP (600 V) Class RK1 Low-Peak dual-element, time-delay fuses

Current-limiting, dual-element, time-delay Class RK1 fuses; 10 seconds (minimum) at 500% rated amps (8 seconds for 0-30 A sizes). Available with optional indication on select ratings (see catalog numbers table). For dimensions, see page 1-3.

### Ratings

- Volts
  - LPN-RK
    - 250 Vac (or less)
    - 125 Vdc* (0-60 A)
    - 250 Vdc* (70-600 A)
  - LPS-RK
    - 600 Vac (or less)
    - 300 Vdc*
- Amps 1/10-600 A
- IR
  - 300 kA RMS Sym.
  - 100 kA DC

* Does not apply to indicating versions.

### Agency information

- UL Listed, Guide JDDZ, File E4273, CSA Certified, Class RK1 per CSA C22.2, No 248.12, Class 1422-02, File 53787, CE

### Features

- Separate overload and short-circuit elements provide time delay for close sizing of high inrush loads linked with RK1 current-limitation and selective coordination ratio of 2:1 (within Low-Peak fuse family) helps prevent widespread blackouts
- Inventory consolidation of Class RK1, RK5 and H fuses for reduced SKU investment and minimizing potential for misapplying fuse
- 300 kA RMS symmetrical interrupting rating provides adequate ratings without obsolescence for all electrical systems, big or small
- Insulated end caps reduces exposure to live parts and extends air gap to distance between blades of adjacent mounted fuses or to housing

### Typical applications

- Large distribution switchboards
- Power panelboards
- Motor control centers
- Machinery disconnect switches

**Data sheet no. 1013**

**Data sheet no. LPN; 1003 (up to 60 A), 1007 (70-600 A)**
**LPS 1001 (up to 60 A), 1002 (70-600 A)**

| Catalog no. (amps) | | | |
|---|---|---|---|
| **250 V LPN-RK*** | | | |
| LPN-RK-1/10SP | LPN-RK-2-1/4SP | LPN-RK-12SP | LPN-RK-110SP** |
| LPN-RK-15/100SP | LPN-RK-2-1/2SP | LPN-RK-15SP | LPN-RK-125SP** |
| LPN-RK-2/10SP | LPN-RK-2-8/10SP | LPN-RK-17-1/2SP | LPN-RK-150SP** |
| LPN-RK-3/10SP | LPN-RK-3SP | LPN-RK-20SP | LPN-RK-175SP** |
| LPN-RK-4/10SP | LPN-RK-3-2/10SP | LPN-RK-25SP | LPN-RK-200SP** |
| LPN-RK-1/2SP | LPN-RK-3-1/2SP | LPN-RK-30SP | LPN-RK-225SP** |
| LPN-RK-6/10SP | LPN-RK-4SP | LPN-RK-35SP** | LPN-RK-250SP** |
| LPN-RK-8/10SP | LPN-RK-4-1/2SP | LPN-RK-40SP** | LPN-RK-300SP** |
| LPN-RK-1SP | LPN-RK-5SP | LPN-RK-45SP** | LPN-RK-350SP** |
| LPN-RK-1-1/8SP | LPN-RK-5-6/10SP | LPN-RK-50SP** | LPN-RK-400SP** |
| LPN-RK-1-1/4SP | LPN-RK-6SP | LPN-RK-60SP** | LPN-RK-450SP** |
| LPN-RK-1-4/10SP | LPN-RK-6-1/4SP | LPN-RK-70SP** | LPN-RK-500SP** |
| LPN-RK-1-6/10SP | LPN-RK-8SP | LPN-RK-80SP** | LPN-RK-600SP** |
| LPN-RK-1-8/10SP | LPN-RK-9SP | LPN-RK-90SP** | |
| LPN-RK-2SP | LPN-RK-10SP | LPN-RK-100SP** | |
| **600 V LPS-RK** | | | |
| LPS-RK-1/10SP | LPS-RK-2-1/4SP | LPS-RK-10SP** | LPS-RK-100SP** |
| LPS-RK-2/10SP | LPS-RK-2-1/2SP | LPS-RK-12SP** | LPS-RK-110SP** |
| LPS-RK-3/10SP | LPS-RK-2-8/10SP | LPS-RK-15SP** | LPS-RK-125SP** |
| LPS-RK-4/10SP | LPS-RK-3SP | LPS-RK-17-1/2SP** | LPS-RK-150SP** |
| LPS-RK-1/2SP | LPS-RK-3-2/10SP | LPS-RK-20SP** | LPS-RK-175SP** |
| LPS-RK-6/10SP | LPS-RK-3-1/2SP | LPS-RK-25SP** | LPS-RK-200SP** |
| LPS-RK-8/10SP | LPS-RK-4SP | LPS-RK-30SP** | LPS-RK-225SP** |
| LPS-RK-1SP | LPS-RK-4-1/2SP | LPS-RK-35SP** | LPS-RK-250SP** |
| LPS-RK-1-1/8SP | LPS-RK-5SP | LPS-RK-40SP** | LPS-RK-300SP** |
| LPS-RK-1-1/4SP | LPS-RK-5-6/10SP | LPS-RK-45SP** | LPS-RK-350SP** |
| LPS-RK-1-4/10SP | LPS-RK-6SP** | LPS-RK-50SP** | LPS-RK-400SP** |
| LPS-RK-1-1/2SP | LPS-RK-6-1/4SP** | LPS-RK-60SP** | LPS-RK-450SP** |
| LPS-RK-1-6/10SP | LPS-RK-7SP** | LPS-RK-70SP** | LPS-RK-500SP** |
| LPS-RK-1-8/10SP | LPS-RK-8SP** | LPS-RK-80SP** | LPS-RK-600SP** |
| LPS-RK-2SP | LPS-RK-9SP** | LPS-RK-90SP** | |

* 0-60 A fuses available with Nickel plate option. Example: LPS-RK30SPNP).
70-600 A fuses available with tin-plate option. Example: LPS-RK-100SP-TP.
**Available with optional indication; to order, place "I" at end of catalog number
Example: LPN-RK-35SP**I** or LPS-RK-15SP**I**.

Recommended blocks for Class RK1 fuses, see page 1-2.

**LPN Time-current characteristics — average melt**

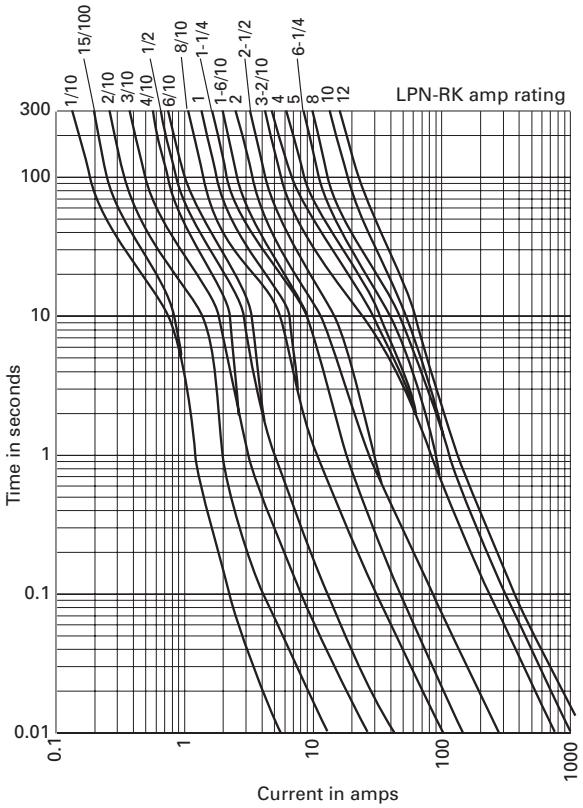


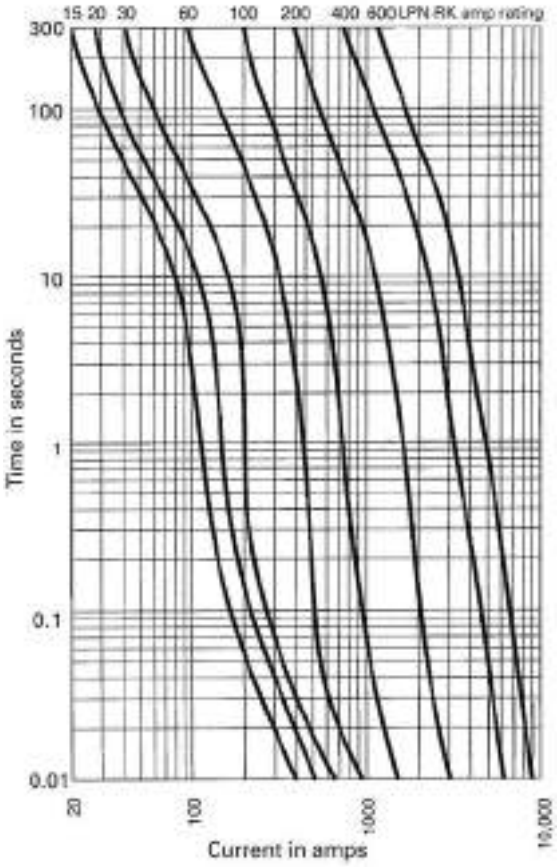


**Data sheet no. LPN-RK 1003 (up to 60 A), 1007 (70-600 A)**
**LPS-RK 1001 (up to 60 A), 1002 (70-600 A)**

### LPS Time-current characteristics — average melt

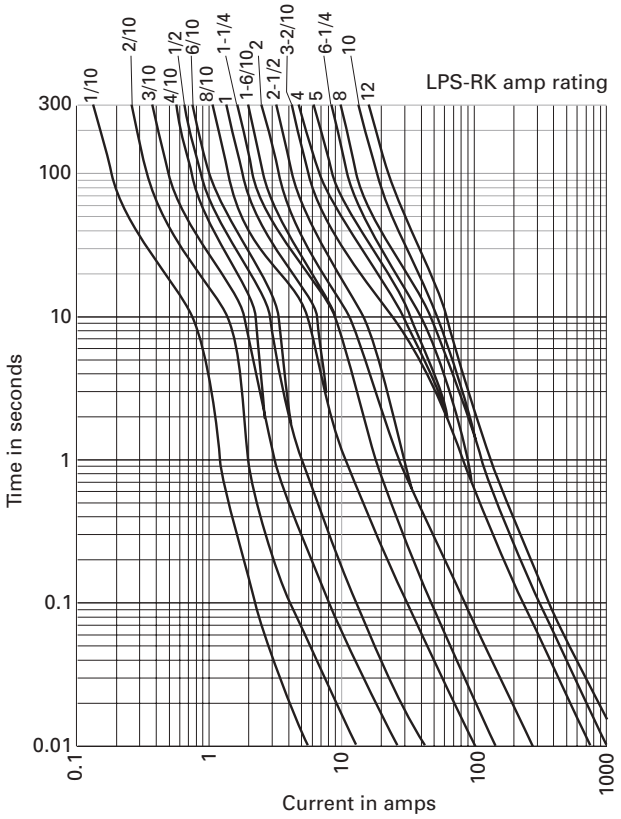


### LPN Current limitation curves

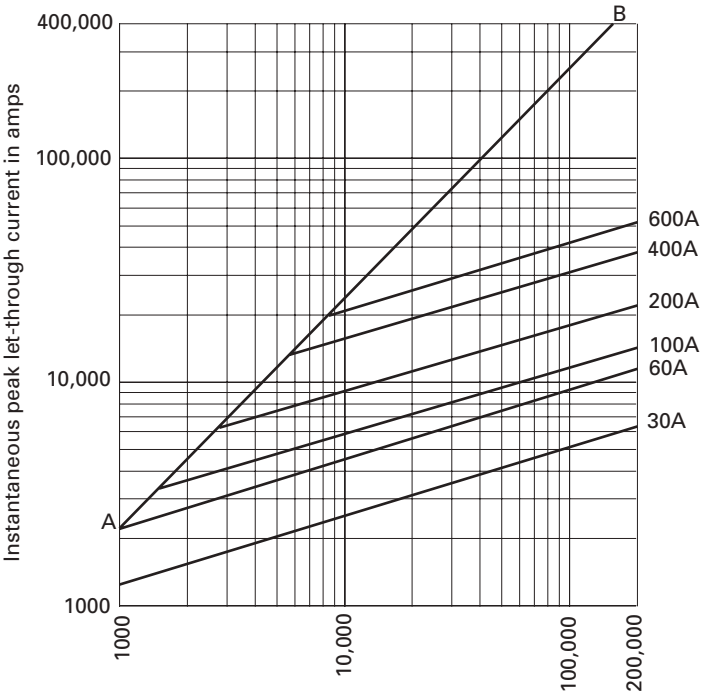


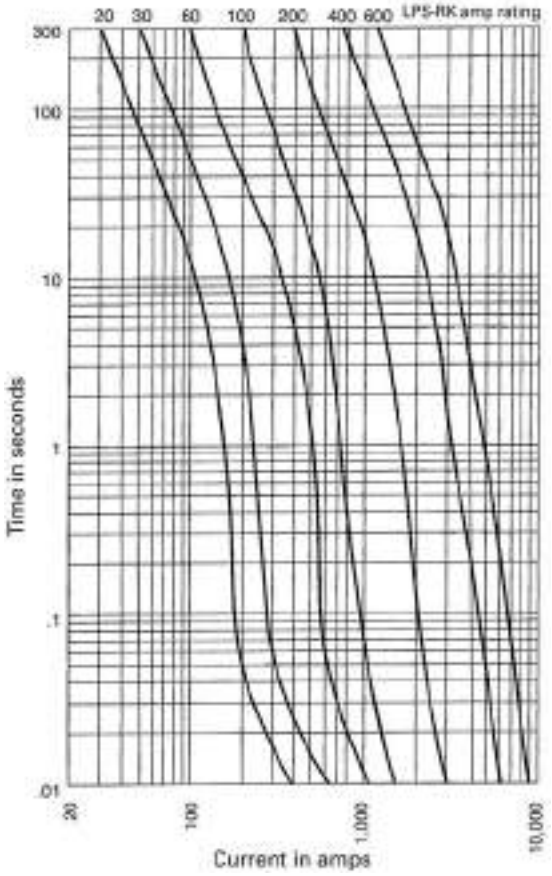


### LPS Current limitation curves

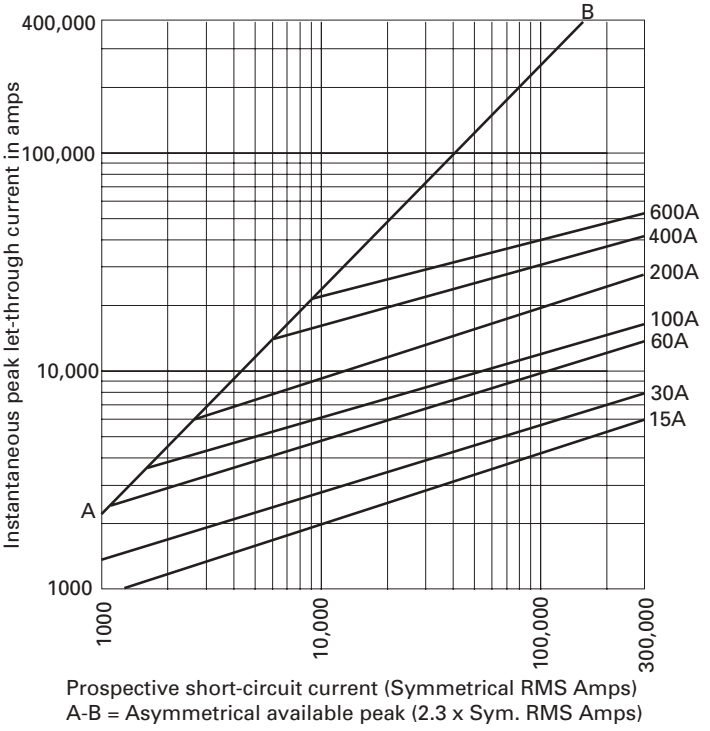


**Data sheet no. LPN-RK 1003 (up to 60 A), 1007 (70-600 A)**
**LPS-RK 1001 (up to 60 A), 1002 (70-600 A)**

## KTN-R (250 V) and KTS-R (600 V) Class RK1 Limitron fast-acting fuses

Fast-acting, current-limiting Class RK1 fuses. For superior electrical protection, Eaton recommends upgrading KTN-R fuse applications to Bussmann series Low-Peak LPN-RK 250 V or LPS-RK 600 V fuses, see page 1-18. For dimensions, see page 1-3.

### Ratings

- Volts
  - KTN-R
    - 250 Vac (or less)
    - 250 Vdc (70-350 A)
  - KTS-R 600 Vac (or less)
- Amps 1-600 A
- IR
  - 200 kA RMS Sym.
  - 100 kA Vdc (KTN-R)

### Agency information

- KTN-R
  - UL Listed, Std 248-12, Class RK1, Guide JDDZ, File E4273
  - CSA Certified, Class 1422-02, File 53787
- KTS-R
  - UL Listed, Std 248-12, Class RK1, Guide JDDZ, File E54273
  - CSA Certified, C22.2 No 248.12, Class 1422-02, File 53787
- CE

### Features

- Current limitation for non-inductive circuits provides Class RK1 current-limiting response to maximum ground fault and short-circuit conditions
- 200 kA interrupting rating provides high ratings at all circuit locations
- Economical protection for high-fault current circuits

### Typical applications

- Panelboards

| Catalog no. (amps) | | | |
|---|---|---|---|
| **250 V KTN-R** | | | |
| KTN-R-1 | KTN-R-15 | KTN-R-70 | KTN-R-200 |
| KTN-R-2 | KTN-R-20 | KTN-R-75 | KTN-R-225 |
| KTN-R-3 | KTN-R-25 | KTN-R-80 | KTN-R-250 |
| KTN-R-4 | KTN-R-30 | KTN-R-90 | KTN-R-300 |
| KTN-R-5 | KTN-R-35 | KTN-R-100 | KTN-R-350 |
| KTN-R-6 | KTN-R-40 | KTN-R-110 | KTN-R-400 |
| KTN-R-8 | KTN-R-45 | KTN-R-125 | KTN-R-450 |
| KTN-R-10 | KTN-R-50 | KTN-R-150 | KTN-R-500 |
| KTN-R-12 | KTN-R-60 | KTN-R-175 | KTN-R-600 |
| **600 V KTS-R** | | | |
| KTS-R-1 | KTS-R-12 | KTS-R-70 | KTS-R-225 |
| KTS-R-2 | KTS-R-15 | KTS-R-75 | KTS-R-250 |
| KTS-R-3 | KTS-R-30 | KTS-R-80 | KTS-R-300 |
| KTS-R-4 | KTS-R-35 | KTS-R-90 | KTS-R-350 |
| KTS-R-5 | KTS-R-40 | KTS-R-125 | KTS-R-400 |
| KTS-R-6 | KTS-R-45 | KTS-R-150 | KTS-R-450 |
| KTS-R-8 | KTS-R-50 | KTS-R-175 | |
| KTS-R-10 | KTS-R-60 | KTS-R-200 | |
| KTS-R-20 | KTS-R-100 | KTS-R-500 | |
| KTS-R-25 | KTS-R-110 | KTS-R-600 | |

Recommended blocks for Class RK1 fuses, see page 1-2.

**Data sheet no. 1043 (KTN-R), 1044 (KTS-R)**

### KTN-R Time-current characteristics — average melt

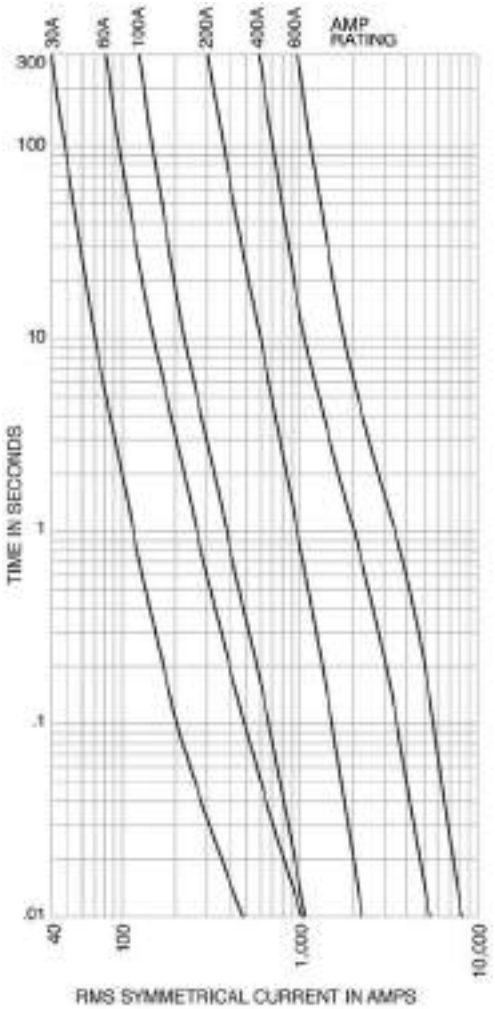


### KTS-R Time-current characteristics — average melt

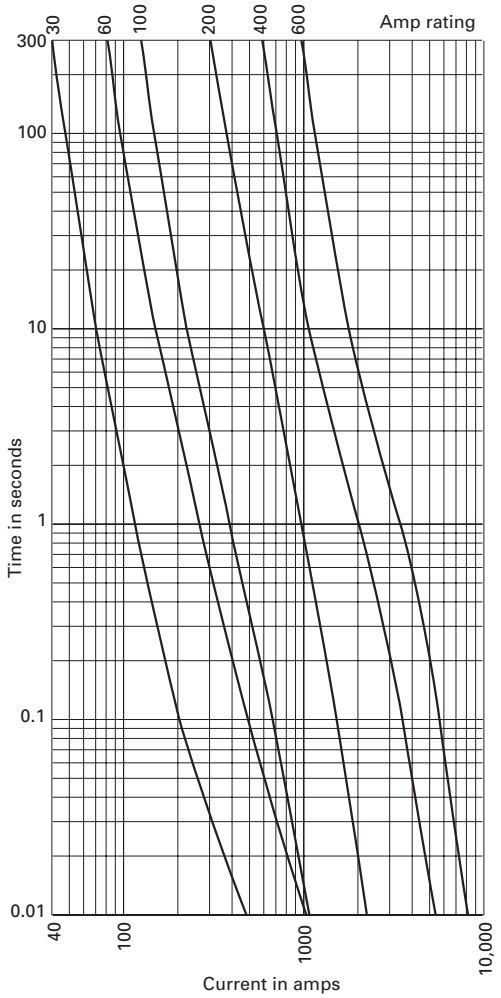


### KTN-R Current limitation curves

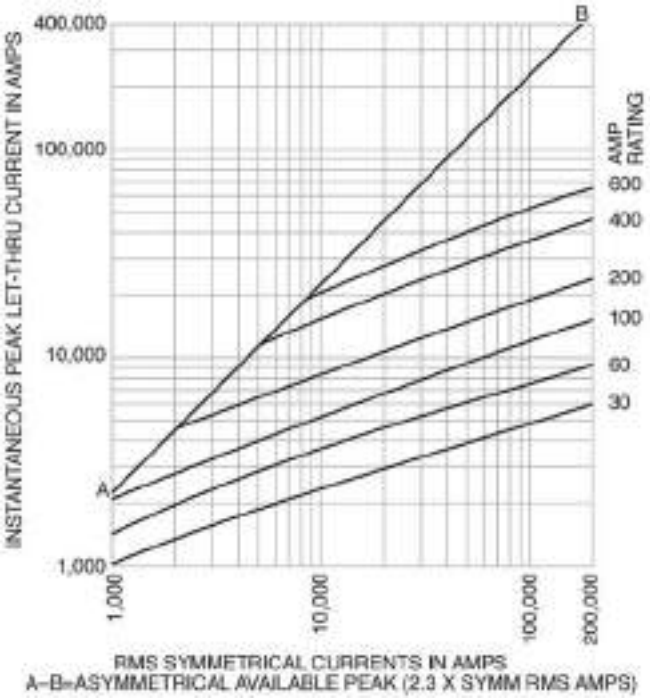


### KTS-R Current limitation curves

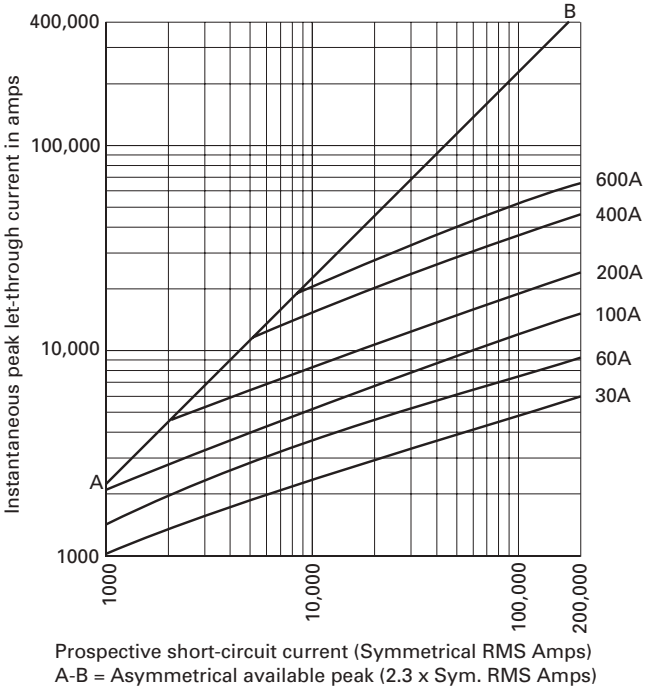


**Data sheet no. 1043 (KTN-R), 1044 (KTS-R)**

# FRN-R (250 V) and FRS-R (600 V) Class RK5 Fusetron™ energy efficient, dual-element, time-delay fuses

Dual-element, time-delay Class RK5 fuses. FRN-R — 10 seconds (minimum) at 500% rated amps (8 seconds for 0-30 A sizes). FRS-R — 10 seconds (minimum) at 500% rated amps. FRN-R and FRS-R available with optional indication on select ratings (see catalog numbers table). For superior electrical protection, Eaton recommends upgrading to Bussmann series Low-Peak LPN-RK (250 V) or LPS-RK (600 V) fuses, see page 1-18. For dimensions, see page 1-3.

## Ratings

- Volts
  - FRN-R
    - 250 Vac (or less)
    - 125 Vdc (1/10-60 A, 110-200 A)
    - 250 Vdc (225-600 A)
  - FRS-R
    - 600 Vac (or less)
    - 300 Vdc 1/10-30 A, 65-600 A
    - 250 Vdc* 35-60 A
- Amps 1/10-600 A
- IR
  - 200 kA RMS Sym.
  - 20 kA DC

* Does not apply to indicating versions.

## Agency information

- FRN-R
  - UL Listed, Std 248-12, Class RK5, Guide JDDZ, File E4273
  - CSA Certified, Class 1422-01, File 53787
- FRS-R
  - UL Listed, Std 248-12, Class RK5, Guide JDDZ, File E4273
  - CSA Certified, Class 1422-02, File 53787
- CE

## Features

- Separate overload and short-circuit elements provide time-delay for sizing as close as 125% of motor FLA
- 2:1 selective coordination amp ratio (within the Fusetron RK5 fuse family) helps prevent overcurrent events from opening upstream Fusetron fuses
- Insulated end caps for 225-600 A (FRN-R) and 65-600 A (FRS-R) fuses reduces exposure to live parts and extends air gap to distance between blades of adjacent mounted fuses or to housing

## Typical applications

- Power panelboards
- Motor control centers
- Combination starters
- Machinery disconnects

| Catalog no. (amps) | | | |
|---|---|---|---|
| **250 V FRN-R** | | | |
| FRN-R-1/10 | FRN-R-2 | FRN-R-10* | FRN-R-100 |
| FRN-R-1/8 | FRN-R-2-1/4 | FRN-R-12* | FRN-R-110 |
| FRN-R-15/100 | FRN-R-2-1/2 | FRN-R-15* | FRN-R-125 |
| FRN-R-2/10 | FRN-R-2-8/10 | FRN-R-17-1/2* | FRN-R-150 |
| FRN-R-1/4 | FRN-R-3 | FRN-R-20* | FRN-R-175 |
| FRN-R-3/10 | FRN-R-3-2/10 | FRN-R-25* | FRN-R-200 |
| FRN-R-4/10 | FRN-R-3-1/2 | FRN-R-30* | FRN-R-225 |
| FRN-R-1/2 | FRN-R-4 | FRN-R-35* | FRN-R-250 |
| FRN-R-6/10 | FRN-R-4-1/2 | FRN-R-40* | FRN-R-300 |
| FRN-R-8/10 | FRN-R-5 | FRN-R-45* | FRN-R-350 |
| FRN-R-1 | FRN-R-5-6/10 | FRN-R-50* | FRN-R-400 |
| FRN-R-1-1/8 | FRN-R-6 | FRN-R-60* | FRN-R-450 |
| FRN-R-1-1/4 | FRN-R-6-1/4 | FRN-R-70 | FRN-R-500 |
| FRN-R-1-4/10 | FRN-R-7 | FRN-R-75 | FRN-R-600 |
| FRN-R-1-1/2 | FRN-R-7-1/2 | FRN-R-80 | |
| FRN-R-1-6/10 | FRN-R-8* | FRN-R-85 | |
| FRN-R-1-8/10 | FRN-R-9* | FRN-R-90 | |
| **600 V FRS-R** | | | |
| FRS-R-1/10 | FRS-R-2 | FRS-R-10* | FRS-R-100 |
| FRS-R-1/8 | FRS-R-2-1/4 | FRS-R-12* | FRS-R-110 |
| FRS-R-15/100 | FRS-R-2-1/2 | FRS-R-15* | FRS-R-125 |
| FRS-R-2/10 | FRS-R-2-8/10 | FRS-R-17-1/2* | FRS-R-150 |
| FRS-R-1/4 | FRS-R-3 | FRS-R-20* | FRS-R-175 |
| FRS-R-3/10 | FRS-R-3-2/10 | FRS-R-25* | FRS-R-200 |
| FRS-R-4/10 | FRS-R-3-1/2 | FRS-R-30* | FRS-R-225 |
| FRS-R-1/2 | FRS-R-4 | FRS-R-35* | FRS-R-250 |
| FRS-R-6/10 | FRS-R-4-1/2 | FRS-R-40* | FRS-R-300 |
| FRS-R-8/10 | FRS-R-5 | FRS-R-45* | FRS-R-350 |
| FRS-R-1 | FRS-R-5-6/10 | FRS-R-50* | FRS-R-400 |
| FRS-R-1-1/8 | FRS-R-6* | FRS-R-60* | FRS-R-450 |
| FRS-R-1-1/4 | FRS-R-6-1/4* | FRS-R-65 | FRS-R-500 |
| FRS-R-1-4/10 | FRS-R-7* | FRS-R-70 | FRS-R-600 |
| FRS-R-1-1/2 | FRS-R-7-1/2* | FRS-R-75 | |
| FRS-R-1-6/10 | FRS-R-8* | FRS-R-80 | |
| FRS-R-1-8/10 | FRS-R-9* | FRS-R-90 | |

* Available with indication To order, place "ID" at the end of the catalog number. Example: FRN-R-30**ID** or FRS-R-7**ID**.

Recommended blocks for Class RK5 fuses, see page 1-2.

**Data sheet no. FRN-R; 1019 (up to 60 A), 1020 (70-600 A)**
**FRS-R 1017 (up to 60 A), 1018 (70-600 A)**

## FRN-R Time-current characteristics — average melt

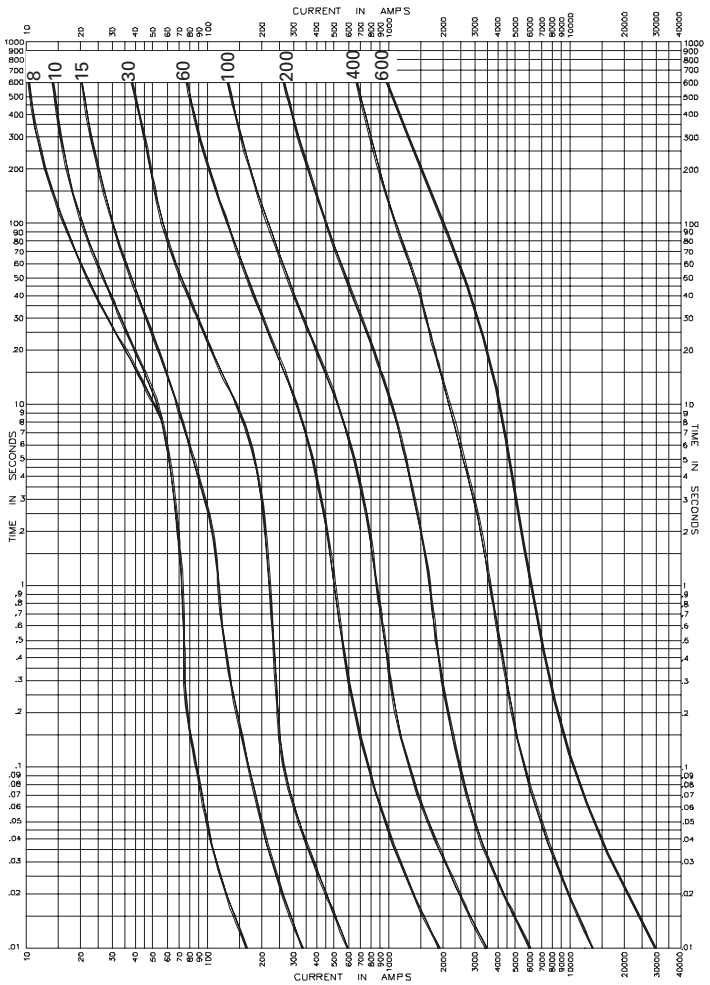


## FRS-R Time-current characteristics — average melt

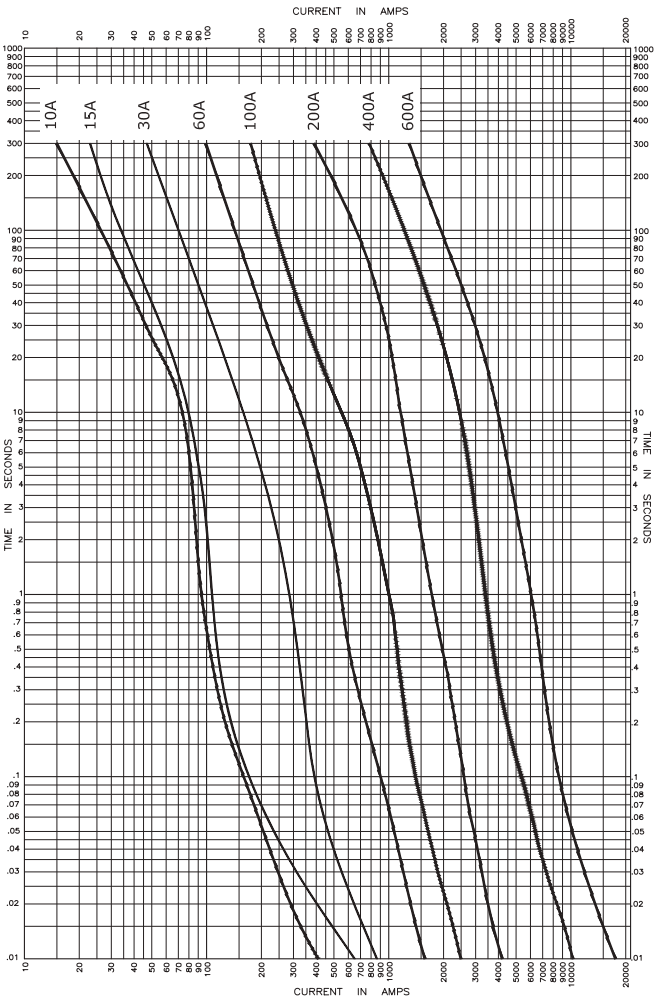


## FRN-R Current limitation curves

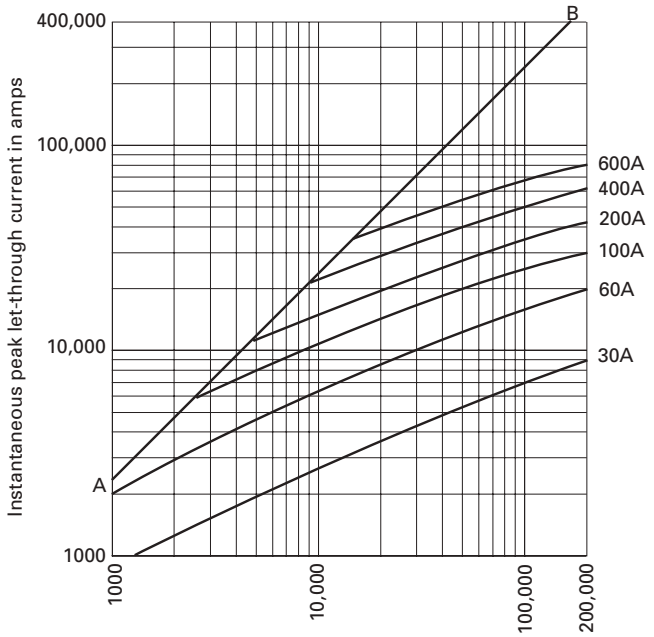


Prospective short-circuit current (Symmetrical RMS Amps)
A-B = Asymmetrical available peak (2.3 x Sym. RMS Amps)

## FRS-R Current limitation curves

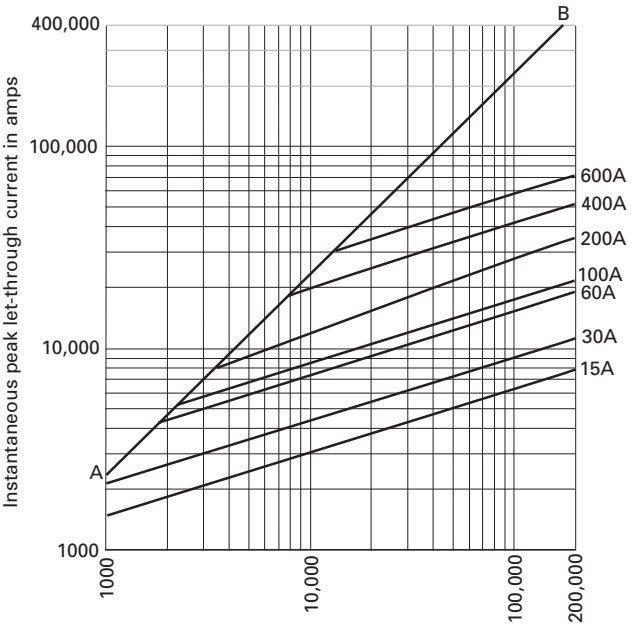


Prospective short-circuit current (Symmetrical RMS Amps)
A-B = Asymmetrical available peak (2.3 x Sym. RMS Amps)

**Data sheet no. FRN-R; 1019 (up to 60 A), 1020 (70-600 A)**
**FRS-R 1017 (up to 60 A), 1018 (70-600 A)**

## JJN (300 V) and JJS (600 V) Class T Limitron fast-acting fuses

Very fast-acting, current-limiting 300 V (JJN) and 600 V (JJS) Class T fuse. For dimensions, see page 1-3.

### Ratings

- Volts
  - JJN
    - 300 Vac (or less)
    - 160 Vdc (15-600 A)
    - 170 Vdc (601-1200 A)
  - JJS 600 Vac (or less)
- Amps
  - JJN 1-1200 A
  - JJS 1-800 A
- IR
  - 200 kA RMS Sym.
  - 20 kA DC @ 160 Vdc (JJN)
  - 100 kA DC @ 170 Vdc (JJN)

### Agency information

- UL Listed, Std 248-15, Class T, Guide JDDZ, File E4273, CSA Certified, Class 1422-02, File 53787, RoHS compliant, CE

### Features

- Series combination ratings with branch circuit breakers allows broad range of coverage, independent of breaker manufacturer
- Current limitation for non-inductive circuits provides Class T current-limiting response to maximum ground fault and short-circuit conditions
- 200 kA interrupting rating provides protection for virtually all circuit locations
- Small footprint allows more efficient use of panel space

### Typical applications

- Large apartment complexes
- Multi-family meter stacks
- VFD line protection

| Catalog no. (amps) | | | |
|---|---|---|---|
| **300 V JJN** | | | |
| JJN-1 | JJN-35 | JJN-110 | JJN-400 |
| JJN-2 | JJN-40 | JJN-125 | JJN-450 |
| JJN-3 | JJN-45 | JJN-150 | JJN-500 |
| JJN-6 | JJN-50 | JJN-175 | JJN-600 |
| JJN-10 | JJN-60 | JJN-200 | JJN-700 |
| JJN-15 | JJN-70 | JJN-225 | JJN-800 |
| JJN-20 | JJN-80 | JJN-250 | JJN-1000 |
| JJN-25 | JJN-90 | JJN-300 | JJN-1200 |
| JJN-30 | JJN-100 | JJN-350 | |
| **600 V JJS** | | | |
| JJS-1 | JJS-30 | JJS-90 | JJS-250 |
| JJS-2 | JJS-35 | JJS-100 | JJS-300 |
| JJS-3 | JJS-40 | JJS-110 | JJS-350 |
| JJS-6 | JJS-45 | JJS-125 | JJS-400 |
| JJS-10 | JJS-50 | JJS-150 | JJS-450 |
| JJS-15 | JJS-60 | JJS-175 | JJS-500 |
| JJS-20 | JJS-70 | JJS-200 | JJS-600 |
| JJS-25 | JJS-80 | JJS-225 | JJS-800 |

Recommended blocks for Class T fuses, see page 1-2.

### Current-limiting effects

#### 300 V JJN

| Prosp. S.C.C. | Let-through current (apparent RMS Sym. vs. fuse rating) | | | | | | | | |
|---|---|---|---|---|---|---|---|---|---|
| — | 15 A | 30 A | 60 A | 100 A | 200 A | 400 A | 600 A | 800 A | 1200 A |
| 500 | 1000 | 1000 | 1000 | 1000 | 1000 | 1000 | 1000 | 1000 | 1000 |
| 1000 | 1000 | 1000 | 1000 | 1000 | 1000 | 1000 | 1000 | 1000 | 1000 |
| 5000 | 1000 | 1000 | 1000 | 1000 | 2000 | 3000 | 5000 | 5000 | 5000 |
| 10,000 | 1000 | 1000 | 1000 | 2000 | 2000 | 4000 | 6000 | 7000 | 9000 |
| 15,000 | 1000 | 1000 | 1000 | 2000 | 3000 | 4000 | 6000 | 9000 | 10,000 |
| 20,000 | 1000 | 1000 | 1000 | 2000 | 3000 | 5000 | 7000 | 10,000 | 11,000 |
| 25,000 | 1000 | 1000 | 2000 | 2000 | 3000 | 5000 | 7000 | 10,000 | 12,000 |
| 30,000 | 1000 | 1000 | 2000 | 2000 | 3000 | 5000 | 8000 | 11,000 | 13,000 |
| 35,000 | 1000 | 1000 | 2000 | 3000 | 4000 | 6000 | 8000 | 11,000 | 13,000 |
| 40,000 | 1000 | 1000 | 2000 | 3000 | 4000 | 6000 | 9000 | 11,000 | 13,000 |
| 50,000 | 1000 | 1000 | 2000 | 3000 | 4000 | 7000 | 9000 | 12,000 | 15,000 |
| 60,000 | 1000 | 1000 | 2000 | 3000 | 4000 | 7000 | 10,000 | 13,000 | 16,000 |
| 70,000 | 1000 | 1000 | 2000 | 3000 | 5000 | 7000 | 10,000 | 14,000 | 17,000 |
| 80,000 | 1000 | 2000 | 2000 | 3000 | 5000 | 8000 | 11,000 | 15,000 | 17,000 |
| 90,000 | 1000 | 2000 | 2000 | 3000 | 6000 | 8000 | 11,000 | 15,000 | 18,000 |
| 100,000 | 1000 | 2000 | 2000 | 4000 | 6000 | 8000 | 12,000 | 16,000 | 19,000 |
| 150,000 | 1000 | 2000 | 3000 | 4000 | 6000 | 9000 | 13,000 | 17,000 | 22,000 |
| 200,000 | 2000 | 2000 | 3000 | 4000 | 7000 | 9000 | 15,000 | 19,000 | 23,000 |

#### 600 V JJS

| Prosp. S.C.C. | Let-through current (apparent RMS Sym. vs. fuse rating) | | | | | | | |
|---|---|---|---|---|---|---|---|---|
| — | 15A | 30A | 60A | 100A | 200A | 400A | 600A | 800A |
| 500 | 1000 | 1000 | 1000 | 1000 | 1000 | 1000 | 1000 | 1000 |
| 1000 | 1000 | 1000 | 1000 | 1000 | 1000 | 1000 | 1000 | 1000 |
| 5000 | 1000 | 1000 | 1000 | 2000 | 3000 | 4000 | 5000 | 5000 |
| 10,000 | 1000 | 1000 | 1000 | 2000 | 3000 | 6000 | 8000 | 9000 |
| 15,000 | 1000 | 1000 | 2000 | 3000 | 4000 | 7000 | 10,000 | 11,000 |
| 20,000 | 1000 | 1000 | 2000 | 3000 | 4000 | 7000 | 10,000 | 12,000 |
| 25,000 | 1000 | 1000 | 2000 | 3000 | 5000 | 7000 | 11,000 | 13,000 |
| 30,000 | 1000 | 1000 | 2000 | 3000 | 5000 | 8000 | 12,000 | 14,000 |
| 35,000 | 1000 | 1000 | 2000 | 3000 | 5000 | 9000 | 13,000 | 15,000 |
| 40,000 | 1000 | 2000 | 2000 | 4000 | 5000 | 9000 | 13,000 | 15,000 |
| 50,000 | 1000 | 2000 | 2000 | 4000 | 6000 | 10000 | 14,000 | 17,000 |
| 60,000 | 1000 | 2000 | 3000 | 4000 | 6000 | 10000 | 16,000 | 18,000 |
| 70,000 | 1000 | 2000 | 3000 | 4000 | 7000 | 11000 | 17,000 | 19,000 |
| 80,000 | 1000 | 2000 | 3000 | 4000 | 7000 | 11000 | 17,000 | 20,000 |
| 90,000 | 1000 | 2000 | 3000 | 4000 | 7000 | 12000 | 18,000 | 21,000 |
| 100,000 | 2000 | 2000 | 3000 | 5000 | 7000 | 12,000 | 19,000 | 22,000 |
| 150,000 | 2000 | 3000 | 4000 | 6000 | 8000 | 14,000 | 22,000 | 25,000 |
| 200,000 | 2000 | 3000 | 4000 | 6000 | 9000 | 16,000 | 24,000 | 28,000 |

**Data sheet no. 1025 (JJN) and 1029 (JJS)**

### JJN Time-current characteristics — average melt

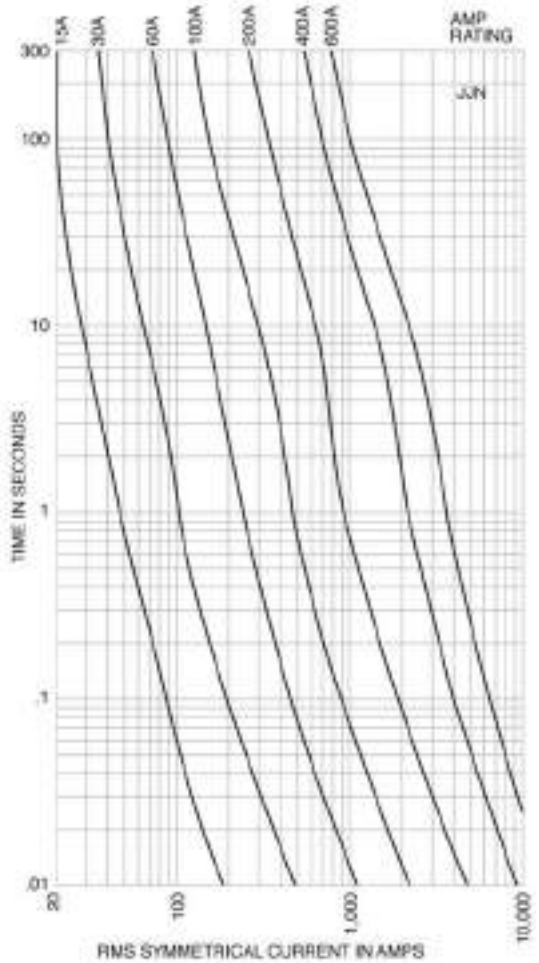


### JJS Time-current characteristics — average melt

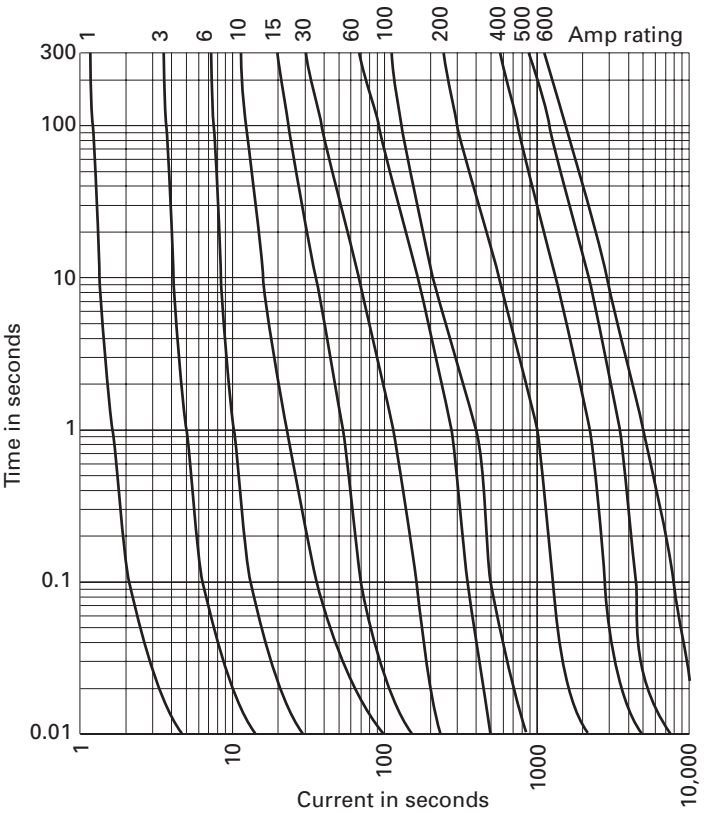


### JJN Current limitation curves

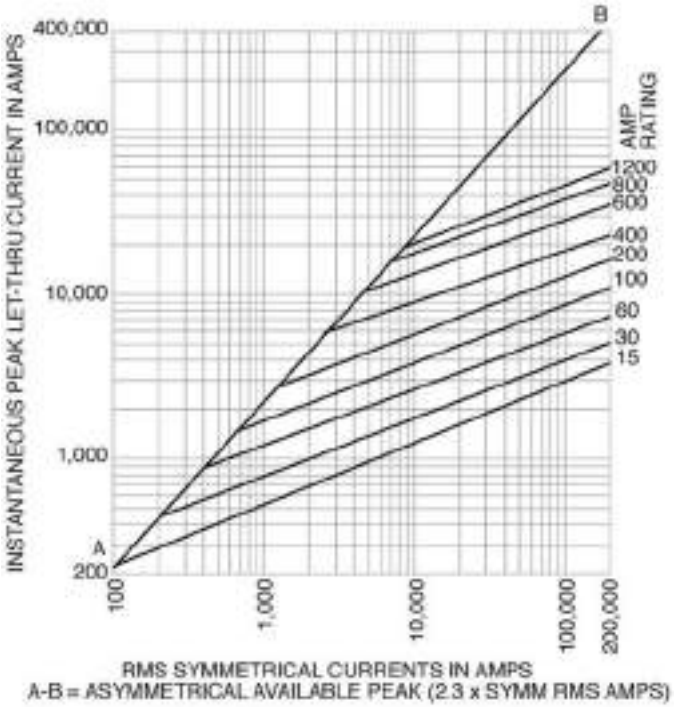


### JJS Current limitation curves

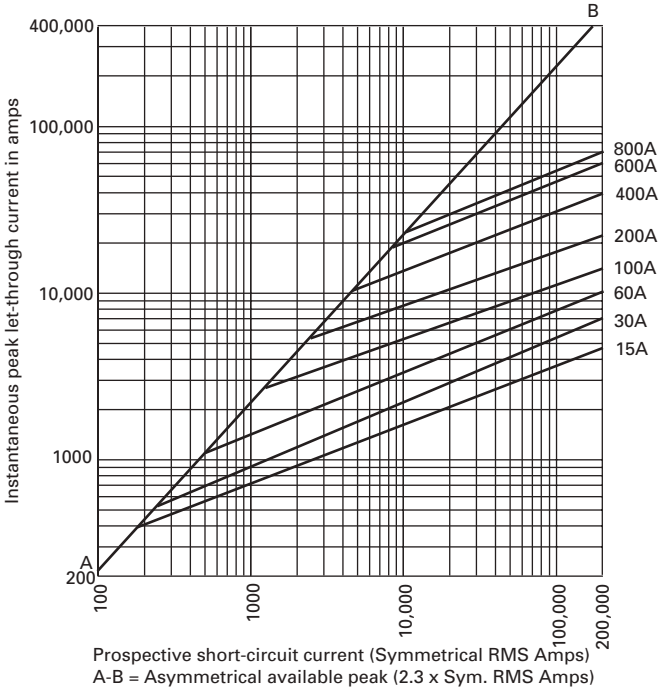


**Data sheet no. 1025 (JJN) and 1029 (JJS)**

## W plug fuses

Fast-acting Edison base plug fuse.

### Ratings

- Volts 125 Vac
- Amps 1/2-12 A
- IR 10 kA RMS Sym.

### Agency information

- UL Listed, Std 248-11, Guide JEFV, File E12112, CE

### Features

- Dependable, fast-acting circuit protection with 10 kA interrupting rating for added safety when applied to existing plug fuse systems and 125 volt single-phase control circuits

### Typical applications

- Replacement fuses for existing systems
- For general purpose circuit protection
- Lighting and other non-motor circuits

| Catalog no.* (amps) | | | |
|---|---|---|---|
| W-1/2 | W-2-1/2 | W-6 | W-10 |
| W-1 | W-3 | W-6-1/2 | W-12 |
| W-1-8/10 | W-4 | W-7 | W-DUMMY** |
| W-2 | W-5 | W-8 | |

* W-15 to W-30 plug fuses obsolete. Replace with either T-(amp) or TL-(amp) Edison base plug fuses.
**Non-conductive dummy base NOT a fuse.

Recommended box cover units for W plug fuses, see page 1-30.

## SL rejection base and TL Edison base plug fuses

Time-delay, loaded link Edison (TL) and rejection base (SL) plug fuses.

### Rating

- Volts 125 Vac
- Amps 15-30 A
- IR 10 kA RMS Sym.

### Agency information

- UL Listed, Std 248-11, Guide JEFV, File E12112, CE

### Features

- Time-delay loaded link TL Edison base plug fuses pass motor overload starting currents without opening and allow closer sizing to motor load for added protection
- Time-delay loaded link SL fuses provide a rejection feature (when used alone or with Fustat adapters to retrofit Edison base holders) to help prevent overfusing

### Typical applications

- Small motor and inductive load circuits with high in-rush current levels
- TL for box cover units to provide small motor overload protection
- SL for applications benefiting from fuse rejection

| Catalog no. (amps) | | | |
|---|---|---|---|
| **Rejection base SL** | | | |
| SL-15 | SL-20 | SL-25 | SL-30 |
| **Edison base TL** | | | |
| TL-15 | TL-20 | TL-25 | TL-30 |

Recommended box cover units for SL and TL plug fuses, see page 1-30. For Fustat™ Edison base adapters for use with SL fuses see page 1-29.

## S rejection base and T Edison base plug fuses

Dual-element, time-delay Edison (T) and rejection base (S) plug fuses.

### Rating

- Volts 125 Vac
- Amps
  - S 1/4-30 A
  - T 3/10-30 A
- IR 10 kA RMS Sym.

### Agency information

- UL Listed, Std 248-11, Type S and T (0 to 6-1/4) Guide JFHR, File E56412 (7 to 30 A) Guide JEFV, File E12112; CSA Certified, Class 1423-01, File 53787, CE

### Features

- T Edison base fuses provide small motor overload protection when used with box cover units
- S rejection base fuses provide a rejection feature (when used alone or with Fustat adapters to retrofit Edison base holders) to prevent overfusing of branch circuits

### Typical applications

- S for residential load centers
- T for box cover units to provide small motor overload protection
- Applications benefiting from fuse rejection to help prevent overfusing (S only)

| Catalog no. (amps) | | | |
|---|---|---|---|
| **Rejection base S** | | | |
| S-1/4 | S-1-4/10 | S-3-1/2 | S-20 |
| S-3/10 | S-1-6/10 | S-4 | S-25 |
| S-4/10 | S-1-8/10 | S-7 | S-30 |
| S-1/2 | S-2 | S-8 | |
| S-6/10 | S-2-1/4 | S-9 | |
| S-8/10 | S-2-1/2 | S-10 | |
| S-1 | S-2-8/10 | S-12 | |
| S-1-1/8 | S-3 | S-14 | |
| S-1-1/4 | S-3-2/10 | S-15 | |
| **Edison base T** | | | |
| T-3/10 | T-1-6/10 | T-4 | T-10 |
| T-4/10 | T-1-8/10 | T-4-1/2 | T-12 |
| T-1/2 | T-2 | T-5 | T-14 |
| T-6/10 | T-2-1/4 | T-5-6/10 | T-15 |
| T-8/10 | T-2-1/2 | T-6 | T-20 |
| T-1 | T-2-8/10 | T-6-1/4 | T-25 |
| T-1-1/8 | T-3 | T-7 | T-30 |
| T-1-1/4 | T-3-2/10 | T-8 | |
| T-1-4/10 | T-3-1/2 | T-9 | |

Recommended box cover units for S and T plug fuses, see page 1-30. For Fustat Edison base adapters for use with SL fuses see page 1-29.

**Data sheet no. 1032 (S) and 1034 (T)**

## P and TC CSA plug fuses

CSA Edison base Type P (P) dual-element fuses and Type D (TC) dual-element, time-delay fuses.

### Ratings

- Volts 125 Vac or less
- Amps 15-30 A
- IR 10 kA

### Agency information

- P - CSA Certified
- TC - CSA Certified, Class 1423-01, File 53787

### Features

- P
  - "P" rating addresses the need of Canadian applications
  - Non-time delay protects non-inductive loads
- TC
  - "D" rating addresses the need of Canadian applications
  - Heavy duty TC fuses are industrial strength products, featuring dual-element construction
  - This spring loaded design provides superior short-circuit and overload protection
  - The TC fuses have more time-delay than the medium duty fuses in order to better protect industrial motors and residential circuits

### Typical applications

- P for non-inductive loads, residential load centers
- TC for box cover units to provide small motor overload protection

| Catalog no. (amps) | | | |
|---|---|---|---|
| **Type P** | | | |
| P-15 | P-20 | P-25 | P-30 |
| **Type D** | | | |
| TC-15 | TC-20 | TC-25 | TC-30 |

Recommended box cover units for P and TC plug fuses, see page 1-30.

**Data sheet no. 1039 (TC)**

## MB Edison base circuit breakers

Edison base manual reset circuit breakers.

### Ratings

- Volts 125 Vac only
- Amps 15 and 20 A
- IR 10 kA RMS Sym.

### Agency information

- UL Listed, File E14942

### Features

- Edison base circuit breakers fit standard Edison base fuse sockets to provide resettable overcurrent protection (correct cause of overcurrent event before resetting)

### Typical applications*

- Replacing Edison base plug fuses in residential fuse panels

| Catalog no.* (amps) | |
|---|---|
| MB-15 | MB-20 |

* Not for use in box cover units or for inductive loads.

## SA Fustat fuse adapters

Adapters for using Type S and SL rejection base fuses in Edison base fuse sockets. Amp rating rejection feature helps prevent overfusing.

### Ratings

- Volts 125 Vac
- Amps 1-30 A

### Agency information

- UL Listed, File E12853, CSA Certified, Class 6225-01, File 47235

### Features

- Fustat adapters screw into the "Edison" thread fuse sockets to easy retrofit existing fuse installations to rejection base fuses
- Available in various amp ratings to cover a wide range of rating requirements to help prevent overfusing

### Typical applications

- Plug fuse installations where it is desirable to restrict fuse amp ratings and help prevent overfusing

| Catalog no. | Accepts S fuses | Accepts SL fuses |
|---|---|---|
| SA-1* | S-1 or smaller | — |
| SA-1-1/4* | S-1-1/4 or smaller | — |
| SA-1-6/10* | S-1-6/10 or smaller | — |
| SA-2* | S-2 or S-1-8/10 | — |
| SA-2-1/2* | S-2-1/2 to S-1-8/10 | — |
| SA-3-2/10* | S-3-2/10 to S-1-8/10 | — |
| SA-4* | S-4 to S-3-1/2 | — |
| SA-5* | S-5 to S-3-1/2 | — |
| SA-6-1/4* | S-6-1/4 to S-3-1/2 | — |
| SA-8* | S-8 to S-7 | — |
| SA-10* | S-10 to S-7 | — |
| SA-15** | S-15 to S-7 | SL-15 |
| SA-20** | S-20 | SL-20 |
| SA-30** | S-30 to S-25 | SL-52, SL-30 |

* Single motor circuits - both running and short-circuit protection.
**Branch circuits.

## Box cover units for Edison base plug fuses

### SOU, SRU, SSU, SOW, SRW, SSW, SOX, SRX, SOY, SRY, SSY, SSY-RL, STY, SCY, SOY-B and SSN

Box cover units for standard electrical boxes provide supplemental fuse protection for small motor circuits and other loads requiring overcurrent protection below that of the branch circuit overcurrent protective device. Versions are available for a fused outlet, switch or plain circuit that fit standard sized electrical boxes. See catalog numbers for available configurations by box type.

Use with SA adaptors and S or SL Type fuses may prevent fuse cover from closing. Not recommended for use with MB-15 Edison base circuit breaker.

SOU SRU SSU SSN

### Ratings

- Volts 125 V
- Amps 15 A

### Agency information

- UL Listed, Guide JAMZ, File IE6491
- CSA Class 6225-01, File 47235

### Features

- A low-cost method of controlling and protecting small motors when used with Bussmann series Type T dual-element fuses
- Low-cost supplemental protection and disconnection of 125 V or less, single-phase circuits

### Typical applications

- Fractional horsepower, 125 volt single-phase motor circuits
- General 125 volt supplemental circuits

2-1/4" handy box units

SOU SRU SSU

4" square box units

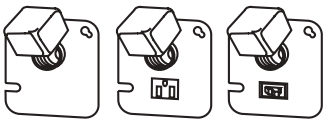

SOY SRY SSY

2-3/4" switch box units

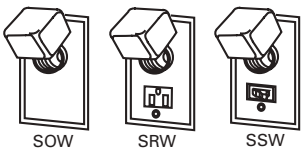

SOW SRW SSW

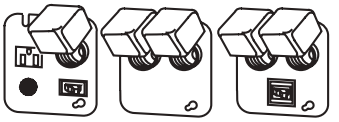

SSY-RL SOY-B STY

4" octagon box units

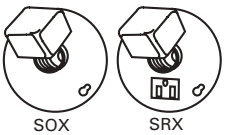

SOX SRX

SCY

| Catalog no. | Box type | Fuse sockets | Switch control[1] | Pilot light[2] | Max motor size (Hp) | Description | Agency information |
|---|---|---|---|---|---|---|---|
| SOU | 2-1/4" Handy | 1 | | | 3/4 | Fuse receptacle only (no switch or outlet) | UL, CSA |
| SRU | | 1 | | | 1/2 | Fused outlet | UL |
| SSU | | 1 | X | | 1/2 | Fused switch | UL, CSA |
| SOW | 2-3/4" Switch | 1 | | | 3/4 | Fuse receptacle only (no switch or outlet) | UL, CSA |
| SRW | | 1 | | | 1/2 | Fused outlet | UL |
| SSW | | 1 | X | | 1/2 | Fused switch | UL, CSA |
| SOX | 4" Octagon | 1 | | | 3/4 | Fuse receptacle only (no switch or outlet) | UL, CSA |
| SRX | | 1 | | | 1/2 | Fused outlet | UL |
| SOY | 4" Square | 1 | | | 3/4 | Fuse receptacle only (no switch or outlet) | UL, CSA |
| SRY | | 1 | | | 1/2 | Fused outlet | UL |
| SSY | | 1 | X | | 1/2 | Fused switch | UL, CSA |
| SSY-RL | | 1 | X | X | 1/2 | Fused switch/outlet with pilot light | — |
| STY[3] | | 2 | X | | 1/2 | Fused double pole switch, dual fuse receptacles | UL |
| SCY[4] | | 2 | | | 1/2 | Dual fused switches | UL |
| SOY-B | | 2 | | | 3/4 | Dual fuse receptacles only (no switch or outlet) | UL |
| SSN | Single gang | 1 | X | | 1/2 | Weatherproof fused switch | UL |

1 Switch turns power to fused load OFF or ON.
2 Pilot light indicates power to load (dark when switch OFF or fuse open).
3 Double pole switch opens both sides of circuit.
4 Can be used for two separate motors with common switch or a single motor (3/4 Hp, 250 Vac max).

**Data sheet no. 1129**

# Bussmann series Fuses Made Simple™ - Control Circuits

## The easiest and fastest way to select and specify the right control circuit fuse

**Contents**


| Description | | Section page |
|---|---|---|
| **Fuse holder and block selection guide** | | **2** |
| **Product** | **Catalog symbol** | |
| **Limiters** | | |
| Cable limiters | K (600 V) | 3 |
| | UH (250 V) | |
| Welder limiters | 64000 (600 V)<br>68000 (600 V) | |
| Bolt-on | ANN (125 V very fast-acting) | 4 |
| | ANL (80 V non time-delay) | |
| | 4164 and 4164-FR blocks | |
| **Supplemental fuses** | | |
| 13/32" x 1-1/2" fast-acting | BAF (250 V) | 5 |
| | KTK (600 V) | |
| | KLM (600 V) | 6 |
| 13/32" x 1-1/2" time-delay | FNM (250 V) | |
| | FNQ (500 V) | 7 |
| 13/32" x 1-3/8" fast-acting | BBS (600 V) | |
| Pin indication and actuator | GBA (125 V) | 8 |
| | GLD (125 V) | |
| | MIC (250 V fast-acting) | |
| | FNA 250 V time-delay) | 9 |
| | MIS (600 V) | |
| | KAZ (600 V) | |
| **In-line fuses** | | |
| size rejecting | GLQ | 10 |
| | GMQ | |
| size rejecting holder | HLQ | |
| Non size-rejecting fuses and holders | GLR | 11 |
| | GMF | |
| | GRF | |
| Non size-rejecting fuse holders | HLR | |
| | HLR-2A | |
| **Blade fuses and holders** | | |
| Fuses | ATR micro | 12 |
| | ATM<br>ATM-_ID<br>ATM-LP | |
| | ATC<br>ATC-_ID | 13 |
| | MAX<br>MAX-_ID | |
| In-line fuse holders | HH2 (ATR) | 14 |
| | ATC-FHID (ATC)<br>HHC (ATC)<br>HHD (ATC)<br>HHF (ATC)<br>HHG (ATC)<br>HHR (ATC)<br>HHS (ATC) | |
| | ATM-FHID (ATM)<br>HHL (ATM)<br>HHM (ATM)<br>HHU (ATM) | |
| | HHX (MAX))<br>MAX-FHID (MAX)) | |
| **PCB fuseclips** | | |
| ATC | 1A5600<br>1A5780 | |
| ATM | 1A5778<br>1A5779 | |

## Fuse holder and block selection guide

Catalog pages for the blocks and holders are denoted parenthetically "()" next to their catalog symbol.

| Fuse | Catalog symbol | Blocks | DIN-Rail holders | Panel mount holders | In-line holders | PCB fuseclips |
|---|---|---|---|---|---|---|
| Cable limiters | K_ | — | — | — | — | — |
| | UH_ | — | — | — | — | — |
| Welder limiters | 64000<br>68000 | RM60_ (8-21) | — | — | — | — |
| Bolt-on limiters | ANN<br>ANL | 4164 (2-4)<br>4164-FR (2-4) | — | — | — | — |
| 13/32" x 1-1/2" supplemental fuses | BAF<br>FNM<br>FNQ<br>KLM<br>KTK | BMM603_ (8-6)<br>3743 (8-14)<br>4421 (8-14)<br>4515 (8-14) | CCP2-_ (11-2)<br>OPM-1038_ (8-12)<br>OPM-NG_ (8-13)<br>CHM (8-8)<br>NDNF1-WH (8-11) | CCPLP†† (30 A) (11-32)<br>HPC-D (8-43)<br>HPD (8-44)<br>HPF (8-43)<br>HPG (8-44)<br>HPM (8-44)<br>HPM-D (8-44)<br>HPS2 (8-45)<br>HPS (8-45) | HEB (8-51)<br>HEX (8-53) | 1A3400_ (3-16)<br>5960 (3-16) |
| 13/32" x 1-3/8" supplemental fuses | BBS | BMM603_ (8-6) | — | HPS-L (8-45) | HEH (8-49) | 1A3400_ (3-16)<br>5960 (3-16) |
| Pin indication fuses and actuator | GBA<br>GLD | — | — | HLD (8-43) | — | 1A1119 (3-15)<br>1A1120 (3-15)<br>1A1907 (3-15)<br>1A3398 (3-15)<br>1A4533 (3-15)<br>1A4534 (3-15)<br>5681 (3-16)<br>5682 (3-16) |
| | MIC<br>FNA | BMM603_ (8-6)<br>3839† | — | HPF-C (8-43) | — | 1A3400_ (3-16)<br>5960 (3-16) |
| | MIS fuse<br>KAZ actuator | 2778†<br>2837†<br>2838† | — | — | — | 1A3400_ (3-16)<br>5960 (3-16) |
| In-line size rejecting fuses | GLQ<br>GMQ | — | — | — | HLQ (2-10) | — |
| In-line non-rejecting fuses | GLR<br>GMF<br>GRF | — | — | — | HLR (2-11)<br>HLR-2A (2-11) | — |
| Automotive blade-type fuses | ATC<br>ATC-_ID | FB_-ATC*<br>15600* | — | — | ATC-FHID (2-14)<br>HHC (2-14)<br>HHD (2-14)<br>HHF (2-14)<br>HHG (2-14)<br>HHR (2-14)<br>HHS (2-14) | 1A5600 (2-14)<br>1A5780 (2-14) |
| | ATM<br>ATM-_ID | FB_-ATM*<br>RTMF-_* | — | — | ATM-FHID (2-14)<br>HHL (2-14)<br>HHM (2-14)<br>HHU (2-14) | 1A5778 (2-14)<br>1A5779 (2-14) |
| | ATM-LP | FB_-ATM*<br>RTMF-_* | — | — | HHV (2-14) | — |
| | ATR micro | FB_-ATR* | — | — | HH2 (2-14) | — |
| | MAX<br>MAX-_ID | | | | HHX (2-14)<br>MAX-FHID (2-14) | |

* Not shown in this catalog, for details and available configurations, see Automotive and Home center catalog no. 5084.
† Not shown in this catalog, see data sheet for details.
†† UL 508 Listed disconnect switch, available in 1-, 2- and 3-pole versions.

## K 600 V cable limiters

Cable limiters for protecting 600 V low voltage distribution and service entrance cables against short-circuit currents.

### Ratings

- Volts 600 Vac
- IR 200 kA RMS Sym. @ 600 Vac

### Agency information

- UL Listing KDM, KDR, KDP and KFM, KCM, KCM-B and KCR

### Features

- Sizes and ratings available to meet many applications

| Catalog no. | Cable size (AWG) | Catalog no. | Cable size (AWG) |
|---|---|---|---|
| ***Tubular terminals** | | | |
| KCY | 4 | KCF | 4/0 |
| KCZ | 3 | KCH | 250 kcmil |
| KCA | 2 | KCJ[1, 2] | 350 kcmil |
| KCB | 1 | KCM[1, 2, 3] | 500 kcmil |
| KCC | 1/0 | KCV | 600 kcmil |
| KCD[1, 2] | 2/0 | KCR[1, 2] | 750 kcmil |
| KCE | 3/0 | KCS | 1000 kcmil |
| ***Tubular and offset bolt-type terminals** | | | |
| KQV | 12 | KDD | 2/0 |
| KQT | 10 | KDE | 3/0 |
| KFZ | 8 | KDF | 4/0 |
| KIG | 6 | KDH | 250 kcmil |
| KDY | 4 | KDJ[3] | 350 kcmil |
| KDA | 2 | KDM[1, 3] | 500 kcmil |
| KDB | 1 | KDU | 600 kcmil |
| KDC | 1/0 | KDR[1, 2] | 750 kcmil |
| ***Compression connector rod and tubular terminals** | | | |
| KEX | 4/0 | KQO | 350 kcmil |
| KFH-A | 250 kcmil | KDT | 500 kcmil |
| ****Center bolt-type and off-set bolt-type terminals** | | | |
| KPF | 4/0 | KDP[1] | 500 kcmil |
| KFT | 250 kcmil | KFM[1] | 750 kcmil |
| KEW | 350 kcmil | | |

* Copper conductors only.
** Copper or aluminum conductors.
1 UL Listed (File E90818), 600 Vac, 200 kA I.R.
2 Available with shrink tube "_V" suffix.
3 Available with molded rubber boots.

### Accessory boots (order separately)

| Limiter | Boot catalog no. | Limiter | Boot catalog no. |
|---|---|---|---|
| KCM | BOOT-KCM | KDM | BOOT-KDM |

Recommended Thomas and Betts crimp tool TBM-14M with die 15506 KDM/15515 KDR for installation.

Data sheet no. 1042

## UH 250 V cable limiters

Cable limiters for protecting 250 V low voltage distribution and service entrance cables used in residential applications against short-circuit currents.

### Ratings

- Volts Up to 250 Vac
- IR 100 kA RMS Sym.

### Terminals and conductors

- Center bolt-to-offset bolt terminals, Cu or Al conductors
- Cu or Al conductors are permitted per the listed cable size. Select the catalog number for the conductor size. See data sheet 1042 for dimensions.

| Catalog no. | Cu cable size (AWG) | Al cable size (AWG) |
|---|---|---|
| UHA | 3/0 | 4/0 |
| UHJ-M | 3/0 | 250 kcmil |
| UHJ-T | 350 kcmil | 500 kcmil |
| UHJ-W | 600 kcmil | 800 kcmil |

Data sheet no. 1042

## 64000 and 68000 600 V welder limiters

Limiters for use on welder circuits. **Note**: welder limiters have special characteristics and are not suitable for use on other circuit types.

### Ratings

- Volts 600 Vac (or less)
- IR 200 kA RMS Sym.

### Features

- Current-limiting devices designed specially for use only on welder circuits
- Time-current characteristics are designed to hold on the intermittent overloading encountered in welder operation, while providing short-circuit protection to the circuit and equipment

| Catalog no. | Fuse holder type | Nominal amp rating |
|---|---|---|
| 68300 | Class H | 300 |
| 68600 | Class H | 600 |
| 64200 | Class J | 200 |
| 64300 | Class J | 300 |

Recommended fuse blocks, see page 2-2.

Data sheet no. 1045

## ANL/ANN limiters

Circuit limiters typically used in fork lifts, marine, aviation and battery charging systems. ANL limiters are non-time-delay and ANN limiters are very fast-acting. Both ANL and ANN limiters measure 7/8" x 3-3/16" (22x81mm) with a depth that varies by amp rating.

Non-time-delay ANL

Very fast-acting ANN

### Ratings

- Volts
  - ANL 80 Vdc
  - ANN 125 Vac, 80 Vdc
- Amps
  - ANL 35-750 A
  - ANN 10-800 A
- IR
  - ANL 2700 A @ 80 Vdc
  - ANN 2500 A @ 125 Vac, 2700 A @ 80 Vdc

### Agency information

- ANL: UL Recognized, CSA Certified, 35-750 A @ 80 Vdc, IR 2700 A, Guide JFHR2, File E56412, Class 1422-30, File 53787, SAE J1171
- ANN: UL Recognized, CSA Certified 35-400 A @ 125 Vac, IR 2500 A and 500 A @ 80 Vdc, IR 2700 A, Guide JFHR2, File E56412, Class 1422-30, File 53787, CE for 35-400 A

| Catalog no. (amps) | | | |
|---|---|---|---|
| **Time-delay ANL** | | | |
| ANL-35 | ANL-125 | ANL-250 | ANL-500 |
| ANL-40 | ANL-130 | ANL-275 | ANL-600 |
| ANL-50 | ANL-150 | ANL-300 | ANL-675 |
| ANL-60 | ANL-175 | ANL-325 | ANL-750 |
| ANL-80 | ANL-200 | ANL-350 | |
| ANL-100 | ANL-225 | ANL-400 | |
| **Fast-acting ANN** | | | |
| ANN-10 | ANN-90 | ANN-225 | ANN-400 |
| ANN-35 | ANN-100 | ANN-250 | ANN-500 |
| ANN-40 | ANN-125 | ANN-275 | ANN-600 |
| ANN-50 | ANN-150 | ANN-300 | ANN-700 |
| ANN-60 | ANN-175 | ANN-325 | ANN-800 |
| ANN-80 | ANN-200 | ANN-350 | |

### Features

- Time-delay sizing for inductive circuits (ANL)
- Fast-acting circuit protection (ANN)
- Element viewing window shows limiter status at a glance

## 4164 and 4164-FR limiter blocks

Limiter fuse blocks for ANL and ANN. 4164 is furnished with nylon inserted locknuts and 4164-FR is furnished with standard hex nuts.

4164

4164-FR

### Dimensions

- L 3.38" x W 0.95" x H 1.62"
- Studs center-to-center 2.43"

### Ratings

- Volts 125 Vac, 80 Vdc, 32 Vdc (self certified)
- Amps 10-800 A
- Poles single, stud terminal

**Data sheet no. 2133**

**Data sheet no. 2023 (ANN), 2024 (ANL)**

## BAF fast-acting 13/32" x 1-1/2" supplemental fuse

Fast-acting, supplemental fuse.
Green color code (250 Vac max).
For superior protection, Eaton recommends upgrading to Bussmann series Low-Peak Class CC fuses. See data sheet no. 1023.

### Ratings

| Fuse amp range | IR at system voltage | | Agency information | |
|---|---|---|---|---|
| | 250 Vac | 125 Vac | UL | CSA |
| 1/4 to 1 | 35 A | 10 kA | — | X |
| 1-1/2 to 2-1/2 | 100 A | 10 kA | — | X |
| 3 | 100 A | 10 kA | X | X |
| 4 to 10 | 200 A | 10 kA | X | X |
| 12 to 15 | 750 A | 10 kA | X | X |
| 20 to 30 | 200 A | 10 kA | — | — |

### Agency information

- UL Listed, Std. 248-14, 250 Vac (3 to 15 A) Guide JDYX, File E19180, CSA Certified, 250 Vac (1/4 to 15 A) Class 1422-01, File 53787

| Catalog no. (amps) | | | |
|---|---|---|---|
| BAF-1/4 | BAF-1-8/10 | BAF-6 | BAF-12 |
| BAF-1/2 | BAF-2 | BAF-6-1/4 | BAF-15 |
| BAF-6/10 | BAF-2-1/2 | BAF-7 | BAF-20 |
| BAF-8/10 | BAF-3 | BAF-8 | BAF-25 |
| BAF-1 | BAF-4 | BAF-9 | BAF-30 |
| BAF-1-1/2 | BAF-5 | BAF-10 | |

### Features

- Green color code for maximum 250 Vac rating
- Fiber tube construction with nickel-plated brass endcaps

### Typical applications

- General purpose circuits
- Lighting circuit protection
- Meter circuits

Recommended blocks and holders for 13/32" x 1-1/2" fuses, see page 2-2.

## KTK fast-acting 13/32" x 1-1/2"supplemental fuse

Fast-acting supplemental fuse.
Black color code (600 Vac max).
For superior protection, Eaton recommends upgrading to Bussmann series Low-Peak Class CC fuses. See data sheet no. 1023.

RoHS 2011/65/EU

### Ratings

| Fuse amp range | IR at rated voltage | Agency information | |
|---|---|---|---|
| | 600 Vac | UL | CSA |
| 1/10 to 30 | 100 kA | X | X |

### Agency information

- UL Listed, Std. 248-14, Guide JDYX, File E19180, CSA Certified, C22.2 No. 248.14, Class 1422-01, File 53787, HRC-MISC, RoHS compliant, CE

| Catalog no. (amps) | | | |
|---|---|---|---|
| KTK-1/10 | KTK-3/4 | KTK-4 | KTK-12 |
| KTK-1/8 | KTK-1 | KTK-5 | KTK-15 |
| KTK-2/10 | KTK-1-1/4 | KTK-6 | KTK-20 |
| KTK-1/4 | KTK-1-1/2 | KTK-7 | KTK-25 |
| KTK-3/10 | KTK-2 | KTK-7-1/2 | KTK-30 |
| KTK-4/10 | KTK-2-1/2 | KTK-8 | |
| KTK-1/2 | KTK-3 | KTK-9 | |
| KTK-6/10 | KTK-3-1/2 | KTK-10 | |

### Features

- Black color code for 600 Vac rating
- Fast-acting for resistive loads
- Melamine tube construction with nickel-plated bronze endcaps

### Typical applications

- Control circuits
- Lighting circuit protection
- Meter circuits

Recommended blocks and holders for 13/32" x 1-1/2" fuses, see page 2-2.

## KLM fast-acting 13/32" x 1-1/2" supplemental fuse

Fast-acting supplemental fuse. Color code black (600 Vac/dc max). For superior protection, Eaton recommends upgrading to Bussmann series Low-Peak Class CC fuses. See data sheet no. 1023. For protecting PV systems, use PVM 10x30mm PV fuses. See data sheet no. 10121.

### Ratings

| Fuse amp range | IR at rated voltage | | Agency information | |
|---|---|---|---|---|
| | 600 Vac | 600 Vdc | UL | CSA |
| 1/10 to 30 | 100 kA | 50 kA | X | X |

### Electrical characteristics

| % of amp rating | Opening time |
|---|---|
| 110% | 4 hours minimum |
| 135% | AC opens within 1 hour |

### Agency information

- UL Listed, Std. 248-14, Guide JDYX, File E19180, CSA Certified, C22.2 No. 248. 14, Class 1422-01, File 53787, RoHS compliant, CE

| Catalog no. (amps) | | | |
|---|---|---|---|
| KLM-1/10 | KLM-1 | KLM-5 | KLM-15 |
| KLM-1/8 | KLM-1-1/4 | KLM-6 | KLM-20 |
| KLM-2/10 | KLM-1-1/2 | KLM-7 | KLM-25 |
| KLM-1/4 | KLM-2 | KLM-8 | KLM-30 |
| KLM-3/10 | KLM-2-1/2 | KLM-9 | |
| KLM-1/2 | KLM-3 | KLM-10 | |
| KLM-3/4 | KLM-4 | KLM-12 | |

### Features

- Color coded for 600 Vac/dc maximum
- A full range DC performance fuse
- Melamine tube construction with nickel-plated brass endcaps

Recommended fuse blocks and holders for 13/32" x 1-1/2" fuses, see page 2-2.

**Data sheet no. 2020**

## FNM time-delay 13/32" x 1-1/2" supplemental fuse

Time-delay supplemental fuse. Color code green (250 Vac max). For superior protection, Eaton recommends upgrading to Bussmann series Low-Peak Class CC fuses. See data sheet no. 1023.

### Ratings

| Fuse amp range | IR at system voltage | | Agency information | |
|---|---|---|---|---|
| | 250 Vac | 125 Vac | UL | CSA |
| 1/10 to 1 | 35 A | 10 kA | X | X |
| 1-1/8 to 3-1/2 | 100 A | 10 kA | X | X |
| 4 to 10 | 200 A | 10 kA | X | X |
| 12 to 30 | 10 kA | — | X | X |

### Agency information

- UL Listed, Std. 248-14, Guide JDYX; File E19180, CSA Certified, Class 1422-01, File 53787, RoHS compliant, CE

| Catalog no. (amps) | | | |
|---|---|---|---|
| FNM-1/10 | FNM-8/10 | FNM-2-1/2 | FNM-6-1/4 |
| FNM-1/8 | FNM-1 | FNM-2-8/10 | FNM-7 |
| FNM-15/100 | FNM-1-1/8 | FNM-3 | FNM-8 |
| FNM-2/10 | FNM-1-1/4 | FNM-3-2/10 | FNM-9 |
| FNM-1/4 | FNM-1-4/10 | FNM-3-1/2 | FNM-10 |
| FNM-3/10 | FNM-1-1/2 | FNM-4 | FNM-12 |
| FNM-4/10 | FNM-1-6/10 | FNM-4-1/2 | FNM-15 |
| FNM-1/2 | FNM-1-8/10 | FNM-5 | FNM-20 |
| FNM-6/10 | FNM-2 | FNM-5-6/10 | FNM-25 |
| FNM-3/4 | FNM-2-1/4 | FNM-6 | FNM-30 |

### Features

- Color coded for 250 Vac maximum
- Melamine tube construction with nickel-plated brass endcaps

### Typical applications

- Circuits with high inrush currents (motor/transformer loads)
- Supplemental protection for 125 Vac and 250 Vac inductive circuits

Recommended fuse blocks and holders for 13/32" x 1-1/2" fuses, see page 2-2.

**Data sheet no. 2028**

## FNQ time-delay 13/32" x 1-1/2" supplemental fuse

Time-delay supplemental fuse. Color code orange (500 Vac max). For superior protection, Eaton recommends upgrading to Bussmann series Limitron FNQ-R Class CC fuses. See data sheet no. 1014.

RoHS 2011/65/EU

### Ratings

| Fuse amp range | IR at rated voltage | Agency information | |
|---|---|---|---|
| | 500 Vac | UL | CSA |
| 1/10 to 30 | 10 kA | X | X |

### Agency information

- UL Listed, Std. 248-14, Guide JDYX, File E19180, CSA Certified, C22.2 No. 248.14, Class 1422-01, File 53787, HRC-MISC, RoHS compliant, CE

| Catalog no. (amps) | | | |
|---|---|---|---|
| FNQ-1/10 | FNQ-8/10 | FNQ-3-2/10 | FNQ-9 |
| FNQ-1/8* | FNQ-1 | FNQ-3-1/2 | FNQ-10 |
| FNQ-15/100* | FNQ-1-1/8 | FNQ-4 | FNQ-12 |
| FNQ-3/16 | FNQ-1-1/4 | FNQ-4-1/2 | FNQ-14 |
| FNQ-2/10 | FNQ-1-1/2 | FNQ-5 | FNQ-15 |
| FNQ-1/4 | FNQ-1-6/10 | FNQ-5-6/10 | FNQ-20 |
| FNQ-3/10 | FNQ-2 | FNQ-6 | FNQ-25 |
| FNQ-4/10 | FNQ-2-1/4 | FNQ-6-1/4 | FNQ-30 |
| FNQ-1/2 | FNQ-2-1/2 | FNQ-7 | |
| FNQ-6/10 | FNQ-3 | FNQ-8 | |

* Not RoHS compliant.

### Features

- Color coded for 500 Vac maximum
- Fiber tube construction with nickel-plated brass endcaps

### Typical applications

- Motor control transformers
- Circuits with in-rush currents

Recommended blocks and holders for 13/32" x 1-1/2" fuses, see page 2-2.

## BBS fast-acting 13/32" x 1-3/8" supplemental fuse

Fast-acting supplemental fuse. Color codes black (600 Vac max 1/10 to 6 A), green (250 Vac max 7 to 10 A), purple (48 Vac max 12 to 30 A). (For superior protection, Eaton recommends upgrading to Bussmann series Low-Peak Class CC fuses. See data sheet no. 1023.

### Ratings

| Fuse amp range | IR at system voltage | | | Agency information | |
|---|---|---|---|---|---|
| | 600 Vac | 250 Vac | 48 Vac | UL | CSA |
| 1/10 to 6 | 10 kA | — | — | X | X |
| 7 to 10 | — | 10 kA | — | X | X |
| 12 to 30* | — | — | — | — | — |

* For interrupting rating, contact factory.

### Agency information

- UL Listed, Std. 248-14 (1/10-6 A@600 Vac, 7-10 A@250 Vac), Guide JDYX, File E19180, CSA Certified, C22.2 No. 248.14 (1/10-6 A@600 Vac, 7-10 A@250 Vac), Class 1422-01, File 53787, CE

| Catalog no. (amps) | | | |
|---|---|---|---|
| BBS-1/10 | BBS-8/10 | BBS-4 | BBS-15 |
| BBS-2/10 | BBS-1 | BBS-5 | BBS-20 |
| BBS-1/4 | BBS-1-1/2 | BBS-6 | BBS-25 |
| BBS-4/10 | BBS-1-6/10 | BBS-7 | BBS-30 |
| BBS-1/2 | BBS-1-8/10 | BBS-8 | |
| BBS-6/10 | BBS-2 | BBS-10 | |
| BBS-3/4 | BBS-3 | BBS-12 | |

### Features

- Color coded for 600 Vac (black) 250 Vac (green) and 48 Vac (purple) for maximum
- Fiber tube construction with nickel-plated brass endcaps

### Typical applications

- Control circuits
- Gaseous vapor fixtures
- HID ballasts
- Electronic circuits
- Hand-held meters

Recommended blocks and holders for BBS fuses, see page 2-2.

## GBA/GLD fast-acting 1/4" x 1-1/4" pin-indicating supplemental fuse

Fast-acting, pin-indicating fuse.

### Ratings

- Volts — see agency information
- Amps 1/2-15 A
- IR — see agency information

### Agency information

- UL Listed, Std. 248-14, 0-5 A/125 Vac, 10,000 AIC, Guide JDYX, File E19180
- UL Recognized, 6 A/125 Vac, 1000 AIC 8-15 A/50 Vac/dc, 300 AIC Guide JDYX2, File E19180
- CSA Certified, 0-5 A/125 Vac, 10,000 AIC Class 1422-01, File 53787
- CE

| Catalog no. (amps) | | | |
|---|---|---|---|
| **GBA** | | | |
| GBA-1/2 | GBA-1-1/2 | GBA-4 | GBA-10 |
| GBA-3/4 | GBA-2 | GBA-5 | GBA-15 |
| GBA-1 | GBA-3 | GBA-8 | |
| **GLD** | | | |
| GLD-1/2 | GLD-1-1/2 | GLD-4 | GLD-10 |
| GLD-3/4 | GLD-2 | GLD-5 | GLD-12 |
| GLD-1 | GLD-3 | GLD-6 | GLD-15 |

### Features

- Type GBA has a "red" pin indicator providing visual identification of failed circuits, resulting in faster troubleshooting (reduced circuit downtime)
- Type GLD has a plated pin to activate transmitting a electrical signal to indicate the location of opened circuits, resulting in reduced downtime

### Typical applications

- Control circuits
- Electronic circuits

Recommended fuse blocks/fuse holders for 1/4" x 1-1/4" indicating fuses, see page 2-2.

## MIC fast-acting 13/32" x 1-1/2" pin-indicating supplemental fuse

Fast-acting, pin-indicating supplemental fuse. Green color code (250 Vac max 1 to 15 A), gray (32 Vac max 20 to 30 A).

### Ratings

| Fuse amp range | IR at voltage rating | | Agency information | |
|---|---|---|---|---|
| | 250 Vac | 32 Vac | UL | CSA |
| 1 | 35 A | — | X | — |
| 2 to 3 | 100 A | — | X | — |
| 5 to 10 | 200 A | — | X | — |
| 15 | 750 A | — | X | — |
| 20 to 30 | — | 10 kA | — | — |

### Electrical characteristics

| % of fuse rating | Opening time |
|---|---|
| 110% | Indefinitely |
| 135% | 1 hour max. |

### Agency information

- UL Listed, Std. 248-14, 1-15 A, Guide JDYX, File E19180, CE

| Catalog no. (amps) | | | |
|---|---|---|---|
| MIC-1 | MIC-5 | MIC-15 | MIC-30 |
| MIC-2 | MIC-8 | MIC-20 | |
| MIC-3 | MIC-10 | MIC-25 | |

### Features

- Color coded by maximum voltage rating
- Pin indication for visual indication of open fuse condition
- Silver-plated pin for positive, electrical signal activation
- Fiber tube construction with nickel-plated bronze endcaps

### Typical applications

- Power electronic circuits in which fuse opening must be quickly apparent
- Control circuits
- PLC Circuits

Recommended signal block for, 13/32" x 1-1/2" indicating fuses, see page 2-2.

**Data sheet no. 2012** **Data sheet no. 10246**

## FNA time-delay 13/32" x 1-1/2" pin-indicating supplemental fuse

Pin-indicating time-delay supplemental fuse. Color coded green (250 Vac max 1/10 to 6 A), blue (125 Vac max 6-1/4 to 15 A) and gray (32 Vac max 20 to 30 A).

Dual-tube construction 12A and up

### Ratings

| Fuse amp range | IR at system voltage | | | Agency information | |
|---|---|---|---|---|---|
| | 250 Vac | 125 Vac | 32 Vac | UL | CSA |
| 1/10 to 8/10 | 35 A | 10 kA | — | X | X |
| 1 to 6 | 200 A | 10 kA | — | X | X |
| 6-1/4 to 15 | — | 10 kA | — | X | X |
| 20 to 30 | — | — | 1 kA | — | — |

### Agency information

- UL Listed, 1/10 to 8/10 A @ 125/250 Vac, 1-15 A @ 125 Vac, Guide JDYX, File E19180, CSA Certified, 1/10 to 10 A @ 125 Vac, Class 1422-01, File 53787, CE

| Catalog no. (amps) | | | |
|---|---|---|---|
| FNA-1/10 | FNA-1 | FNA-3 | FNA-9 |
| FNA-1/8 | FNA-1-1/8 | FNA-3-2/10 | FNA-10 |
| FNA-15/100 | FNA-1-1/4 | FNA-3-1/2 | FNA-12 |
| FNA-2/10 | FNA-1-4/10 | FNA-4 | FNA-15 |
| FNA-1/4 | FNA-1-1/2 | FNA-4-1/2 | FNA-20 |
| FNA-3/10 | FNA-1-6/10 | FNA-5 | FNA-25 |
| FNA-4/10 | FNA-1-8/10 | FNA-5-6/10 | FNA-30 |
| FNA-1/2 | FNA-2 | FNA-6 | |
| FNA-6/10 | FNA-2-1/4 | FNA-6-1/4 | |
| FNA-3/4 | FNA-2-1/2 | FNA-7 | |
| FNA-8/10 | FNA-2-8/10 | FNA-8 | |

### Features

- Color coded by maximum voltage rating
- Pin-indication for visual indication of open fuse condition
- Dual-element, time-delay performance permits close sizing on control transformers and relays
- Silver-plated pin for positive, electrical signal activation
- 12 amp and more versions are dual-tube construction

Recommended signal block for 13/32" x 1-1/2" indicating fuses, see page 2.2.

## MIS non time-delay 13/32" x 2" pin-indicating supplemental fuse and KAZ non-fuse pin-indicating actuator

**MIS** is a non time-delay pin-indicating fuse.

**KAZ** is a non-fuse actuator mounted in parallel with fuses having a 50 amp or larger rating to provide blown fuse dropout for shunt-trip fused switches. To order, specify catalog number **KAZ**.

### Ratings

| | MIS fuse | KAZ actuator |
|---|---|---|
| **Volts** | 600 Vac | 600 Vac |
| **Amps** | 1-12 A | N/A |
| **IR** | 200 kA | 200 kA |

### MIS fuse electrical characteristics

| MIS Fuse | Load | Opening time |
|---|---|---|
| All | 110% | 4 hrs. (min.) |
| 1-5 A | 150% | 6 min. (max.) |
| 6-12 A | 150% | 12 min. (max.) |

| MIS fuse catalog no. (amps) | | | |
|---|---|---|---|
| MIS-1 | MIS-3 | MIS-5 | MIS-10 |
| MIS-2 | MIS-4 | MIS-8 | MIS-12 |

### KAZ agency information

- UL Listed, Guide JDVS, File E58836, CE

### MIS fuse features

- Pin indicator provides visual identification of failed circuits, resulting in faster troubleshooting (reduced circuit downtime)
- Fuse can be used in circuits rated 600 V or less
- High 200 kA interrupting rating for high fault current circuits

### MIS fuse typical applications

- 480 V control circuits
- PLC circuits

### KAZ actuator features

- Convenient means to add open fuse signaling
- Actuator can be used in circuits rated 600 V or less
- High 200 kA interrupting rating for high fault current circuits

### KAZ actuator typical applications

- Large, shunt-trip fused switches
- Fuse protected circuits rated 50 A or larger with shunt-trip devices

Recommended signal blocks for MIS and KAZ, see page 2-2.

## GLQ fast-acting, size-rejecting supplemental fuse

Fast-acting, size-rejecting in-line fuse. Match fuse and holder amp rating per catalog number table below.

### Ratings

- Volts 300 Vac (or less)
- Amps 1-10 A
- IR 10 kA

### Agency information

- UL Listed, Std. 248-14, (Guide JDYX, File E19180), CSA Certified C22.2 No. 248.14, (Class 1422-01,File 53787), CE

| Catalog no. (amps) and holders | | | |
|---|---|---|---|
| **Fuse** | **Holder[1, 2]** | **Fuse** | **Holder[1, 2]** |
| GLQ-1 | HLQ-1-6/10 | GLQ-3 | HLQ-3-2/10 |
| GLQ-1-1/2 | HLQ-1-6/10 | GLQ-4 | HLQ-5 |
| GLQ-1-6/10 | HLQ-1-6/10 | GLQ-5 | HLQ-5 |
| GLQ-2 | HLQ-3-2/10 | GLQ-9 | HLQ-10 |
| GLQ-2-1/2 | HLQ-3-2/10 | GLQ-10 | HLQ-10 |

1 Carrier is UL Recognized, Guide IZLT2, File E14853 and CSA Certified, Class 6225-01, File 47235 10 A, 300 Vac.
2 Units can be panel-mounted either in a knockout hole with a separate steel clip (BK/A-104) or in a keyhole punch using separate mounting clip NO.6374 for panels of thickness 0.043"to 0.062" or NO.4909 for thickness 0.030" to 0.042".
**Note:** Do not put tension on line (rear) terminal of fuse holder.

### Features

- In-line, fast-acting circuit protection
- Rejection feature prevents overfusing

### Typical applications

- In-line lighting ballast protection

## GMQ time-delay, size-rejecting supplemental fuse

Time-delay, size-rejecting in-line fuse. Match fuse and holder amp rating per catalog number table below.

### Ratings

- Volts 300 Vac (or less)
- Amps 1/2 to 6-1/4 A
- IR 10 kA

### Agency information

- UL Listed, Std. 248-14, (Guide JDYX, File E19180), CSA Certified, (Class 1422-01, File 53787), CE

| Catalog no. (amps) and holders | | | |
|---|---|---|---|
| **Fuse** | **Holders[1, 2]** | **Fuse** | **Holders[1, 2]** |
| GMQ-1/2 | HLQ-1/2 | GMQ-2-1/2 | HLQ-3-2/10 |
| GMQ-6/10 | HLQ-1-6/10 | GMQ-3 | HLQ-3-2/10 |
| GMQ-8/10 | HLQ-1-6/10 | GMQ-3-2/10 | HLQ-3-2/10 |
| GMQ-1 | HLQ-1-6/10 | GMQ-4 | HLQ-5 |
| GMQ-1-1/4 | HLQ-1-6/10 | GMQ-5 | HLQ-5 |
| GMQ-1-6/10 | HLQ-1-6/10 | GMQ-6-1/4 | HLQ-8 |
| GMQ-2 | HLQ-3-2/10 | | |

1 Carrier is UL Recognized, Guide IZLT2, File E14853 and CSA Certified, Class 6225-01, File 47235 10 A, 300 Vac.
2 Units can be panel-mounted either in a knockout hole with a separate steel clip (BK/A-104) or in a keyhole punch using separate mounting clip NO.6374 for panels of thickness 0.043"to 0.062" or NO.4909 for thickness 0.030" to 0.042"
**Note:** Do not put tension on line (rear) terminal of fuse holder.

### Features

- In-line, fast-acting circuit protection
- Rejection feature prevents overfusing

### Typical applications

- In-line lighting ballast protection

## HLQ fuse holders for both GLQ and GMQ fuses

**Data sheet no. 2033**

**Data sheet no. 2030**

## GLR fast-acting, non size-rejecting supplemental fuse

Fast-acting, non-rejection, in-line fuse. All fuses use the same HLR or HLR-2A holders.

### Ratings

- Volts 300 Vac (or less)
- Amps 3/16-15 A
- IR 10 kA

### Agency information

- UL Listed, Std. 248-14, 0-15 A/300 Vac Guide JDYX, File E19180, CSA Certified C22.2, No. 248-14, 0-10 A/300 V Class 1422-01, File 53787, CE

| Catalog no. (amps) and holders | | | |
|---|---|---|---|
| **Fuse** | **Holder[1, 2]*** | **Fuse** | **Holder[1, 2]*** |
| GLR-1/2 | HLR | GLR-6 | HLR |
| GLR-1 | HLR | GLR-7 | HLR |
| GLR-1-1/2 | HLR | GLR-8 | HLR |
| GLR-1-6/10 | HLR | GLR-9 | HLR |
| GLR-2 | HLR | GLR-10 | HLR |
| GLR-3 | HLR | GLR-12 | HLR |
| GLR-4 | HLR | GLR-15 | HLR-2A |
| GLR-5 | HLR | | |

1 Carrier is UL Recognized, Guide IZLT2, File E14853 and CSA Certified, Class 6225-01, File 47235 12 A, 300 Vac.
2 Units can be panel-mounted either in a knockout hole with a separate steel clip (BK/A-104) or in a keyhole punch using separate mounting clip NO.6374 for panels of thickness 0.043"to 0.062" or NO.4909 for thickness 0.030" to 0.042".
* For two leads (one each for line and loadside) order HLR-2A, 15 A, 300 V
**Note:** Do not put tension on line (rear) terminal of fuse holder.

### "A" in-line holder

An alternative to the HLR fuse holder is the "A" fuse holder. The A fuse holder comes WITHOUT leads. The customer inserts NO.18 insulated solid copper wire into the lineside receptacle as well as into the load side receptacle. It has the same body dimensions, utilizes the same mounting hole, and takes the same mounting clips as the HLR. The A fuse holder is UL Recognized, 10 A, 300 Vac, Guide IZLT2, File E14853 and CSA Certified, 10 A, 300 Vac, Class 6225-01, File 47235. Order catalog number A.

### Features

- In-line, fast-acting circuit protection.

### Typical applications

- In-line lighting ballast protection

HLR-2A
fuse holder

## GMF/GRF time-delay, non size-rejecting supplemental fuses

Time-delay, non-rejection, in-line fuse. All fuses use the same HLR or HLR-2A holders.

### Ratings

- Volts 300 Vac (or less)
- Amps 3/10-10 A
- IR 10 kA

### Agency information

- UL Listed, Std. 248-14 0-10 A, Guide JDYX, File E19180, CSA Certified, Class 1422-01, File 53787, CE

| Catalog no. (amps) and holders | | | |
|---|---|---|---|
| **Fuse** | **Holder[1, 2]*** | **Fuse** | **Holder[1, 2]*** |
| GMF-3/10 | HLR | GMF-3 | HLR |
| GMF-1/2 | HLR | GMF-3-2/10 | HLR |
| GMF-6/10 | HLR | GMF-4 | HLR |
| GMF-8/10 | HLR | GMF-5 | HLR |
| GMF-1 | HLR | GMF-6-1/4 | HLR |
| GMF-1-1/4 | HLR | GMF-7 | HLR |
| GMF-1-6/10 | HLR | GRF-8 | HLR |
| GMF-2 | HLR | GMF-10 | HLR |
| GMF-2-1/2 | HLR | GRF-10 | HLR |
| GMF-2-8/10 | HLR | | |

1 Carrier is UL Recognized, Guide IZLT2, File E14853 and CSA Certified, Class 6225-01, File 47235 12 A, 300 Vac.
2 Units can be panel-mounted either in a knockout hole with a separate steel clip (BK/A-104) or in a keyhole punch using separate mounting clip NO.6374 for panels of thickness 0.043"to 0.062" or NO.4909 for thickness 0.030" to 0.042".
* For two leads order HLR-2A, 15 A, 300 V
**Note:** Do not put tension on line (rear) terminal of fuse holder.

### "A" in-line holder

An alternative to the HLR fuse holder is the A fuse holder. The A fuse holder comes WITHOUT leads. The customer inserts NO.18 insulated solid copper wire into the line side receptacle as well as into the load side receptacle. It has the same body dimensions, utilizes the same mounting hole, and takes the same mounting clips as the HLR. The A fuse holder is UL Recognized, 10 A, 300 Vac, Guide IZLT2, File E14853 and CSA Certified, 10 A, 300 Vac, Class 6225-01, File 47235. Order catalog number A.

### Features

- In-line, time-delay circuits protection

### Typical applications

- In-line lighting ballast protection

HLR
fuse holder



Data sheet no. 2032

Data sheet no. 2031

## ATR fast-acting micro blade fuse

Fast-acting, color-coded 2-leg micro blade fuse.

### Ratings

- Volts 32 Vdc
- Amps 5-30 A
- IR 1000 A

### Agency information

- RoHS compliant

| Catalog no. (amps) | | | |
|---|---|---|---|
| **Fuse** | **Color code** | **Fuse** | **Color code** |
| ATR-5 | Tan | ATR-20 | Yellow |
| ATR-7-1/2 | Brown | ATR-25 | Clear |
| ATR-10 | Red | ATR-30 | Green |
| ATR-15 | Blue | | |

### Features

- Space-savings size
- Industry standard color coding for easy identification of fuse rating

### Typical applications

- Automotive

Recommended holder for ATR fuses, see page 2-14.

## ATM and ATM-LP fast-acting blade fuses

Fast-acting, color-coded blade fuse available in standard and low-profile versions. Standard version available with indication.

*Low-profile*



*Indicating*

*Standard*

### Ratings

- Volts 32 Vdc
- Amps 1-30 A
- IR 1000 A

### Agency information

- UL Listed, Guide FHXT, File AU 169 (2-30 A non-indicating ATM)

| Catalog no. (amps) | | | |
|---|---|---|---|
| **Non-indicating** | ***Indicating** | **Low-profile** | **Color code** |
| ATM-1 | — | — | Black |
| ATM-2 | — | ATM-2LP | Gray |
| ATM-3 | ATM-3ID | ATM-3LP | Violet |
| ATM-4 | — | ATM-4LP | Pink |
| ATM-5 | ATM-5ID | ATM-5LP | Tan |
| ATM-7-1/2 | ATM-7-1/2ID | ATM-7-1/2LP | Brown |
| ATM-10 | ATM-10ID | ATM-10LP | Red |
| ATM-15 | ATM-15ID | ATM-15LP | Blue |
| ATM-20 | ATM-20ID | ATM-20LP | Yellow |
| ATM-25 | ATM-25ID | ATM-25LP | Clear |
| ATM-30 | ATM-30ID | ATM-30LP | Green |

* Call customer satisfaction for ordering information.

### Features

- Industry standard color coding for easy identification of fuse rating
- Indicating versions show blown fuse at a glance, speeds troubleshooting

### Typical applications

- Automotive

Recommended blocks and holders for ATM fuses, see page 2-14.

**Data sheet no. 2048 (ATM), 2050 (ATM-LP)**

## ATC fast-acting blade fuse

Fast-acting, color-coded blade fuse for automotive and control circuit applications.

*Standard*

*Indicating*

### Ratings

- Volts 32 Vdc
- Amps 1-40 A
- IR 1000 A

### Agency information

- UL Recognized, (1-40 A) (Guide JFHR2, File E56412), SAE Standard J1284

| Catalog no. (amps) | | |
|---|---|---|
| **Non-indicating** | ***Indicating** | **Color code** |
| ATC-1 | — | Black |
| ATC-2 | — | Gray |
| ATC-3 | ATC-3ID | Violet |
| ATC-4 | — | Pink |
| ATC-5 | ATC-5ID | Tan |
| ATC-7-1/2 | ATC-7-1/2ID | Brown |
| ATC-10 | ATC-10ID | Red |
| ATC-15 | ATC-15ID | Blue |
| ATC-20 | ATC-20ID | Yellow |
| ATC-25 | ATC-25ID | Clear |
| ATC-30 | ATC-30ID | Green |
| ATC-35 | ATC-35ID | Blue-green |
| ATC-40 | ATC-40ID | Orange |

* Call customer satisfaction for ordering information.

### Features

- Industry standard color coding for easy identification of fuse rating
- Indicating versions show blown fuse at a glance, speeds troubleshooting

### Typical applications

- Automotive
- Low voltage control circuits

Recommended blocks and holders for ATC fuses, see page 2-14.

## MAX (MAXI) fast-acting blade fuse

Fast-acting, color-coded, high amp blade fuse. Available with and without indication.

*Standard*

*Indicating*

### Ratings

- Volts 32 Vdc
- Amps
  - 20-80 A (non-indicating)
  - 20-100 A (indicating)
- IR 1000 A

| Catalog no. (amps) | | |
|---|---|---|
| **Non-indicating** | ***Indicating** | **Color code** |
| MAX-20 | MAX-20ID | Yellow |
| MAX-25 | — | Gray |
| MAX-30 | MAX-30ID | Green |
| MAX-35 | — | Brown |
| MAX-40 | MAX-40ID | Orange |
| MAX-50 | MAX-50ID | Red |
| MAX-60 | MAX-60ID | Blue |
| MAX-70 | MAX-70ID | Tan |
| MAX-80 | MAX-80ID | Clear |
| — | MAX-100ID | Purple |

* Call customer satisfaction for ordering information.

### Features

- Color coded housing for easy identification of fuse rating
- Indicating versions show blown fuse at a glance, speeds troubleshooting

### Typical applications

- Automotive

Recommended holders for MAX fuses, see page 2-14.

## In-line fuse holders for ATM, ATC and MAX fuses

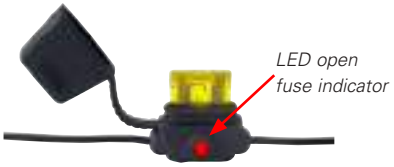


*easy*ID LED indicating holders available for ATM, ATC and MAX fuses

*Typical in-line blade fuse holders with leadwires*

In-line fuse holders for ATM, ATC and MAX blade fuses. Versions available with and without covers and with open fuse indication.

### Ratings

- Volts 32 Vdc
- Amps 80% continuous of fuse rating. See catalog numbers table for individual holder fuses amp ranges.

| Catalog no. | Description | Max amps | Electrical connection |
|---|---|---|---|
| **ATR holder** | | | |
| HH2 | Black w/ cover | 15 | 2x4" #16 red leadwire |
| **ATM holders - not for low-profile ATM fuses** | | | |
| HHL | Black w/ cover | 20 | 2x4" #16 black leadwire |
| HHM | Black w/ cover | 30 | 2x4" #12 red leadwire |
| HHU | Black w/ cover | 30 | 2x4" #12 red leadwire |
| ATM-FHID | Indicating holder, black w/ cover | 20 | 2x4" #16 black leadwire |
| **Low-profile ATM holder** | | | |
| HHV | Black w/ cover | 20 | 2x4" #12 red leadwire |
| **ATC holders** | | | |
| HHC | Yellow | 20 | 2x4" #16 black leadwire |
| HHD | Black | 30 | 2x4" #12 yellow leadwire |
| HHF | Black w/ cover | 20 | 2x4" #16 yellow leadwire |
| HHG | Black w/ cover | 30 | 2x4" #12 yellow leadwire |
| HHR | Black w/ cover | 30 | 2x5" #12 red leadwire |
| HHS | Blue, self-stripping | 20 | Accepts #14-18 leadwire |
| ATC-FHID | Indicating holder, black w/ cover | 20 | 2x6" #16 black leadwire |
| **MAX holders** | | | |
| HHX | Black w/ cover | 60 | 2x5" #6 red leadwire |
| MAX-FHID | Indicator, black w/ cover | 60 | 2x5" #6 red leadwire |

Fuses must be fully inserted into the holder to provide a solid connection. Poor or improper fuse insertion can result in fuse and holder failure and loss of power and/or circuit protection.

## PCB fuseclips for ATM and ATC fuses

### ATM fuseclips

Catalog no. 1A5778

- 15 A
- Nickel-plated brass

Dimensions — mm (in)

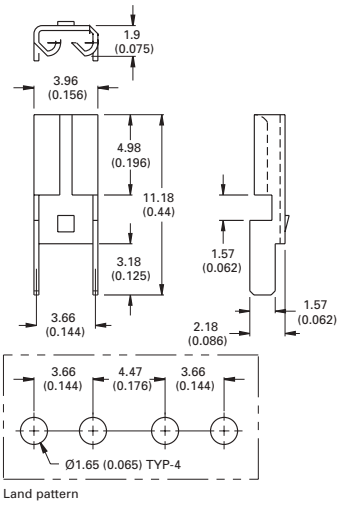


Catalog no. 1A5779

- 15 A
- Nickel-plated brass/glass-filled nylon

Dimensions — mm (in)

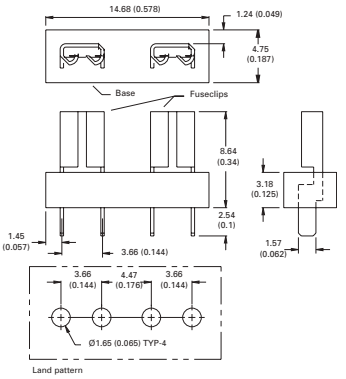


### ATC fuseclips

Catalog no. 1A5600

- 20 A
- Tin-plated cartridge brass

Dimensions — in (mm)

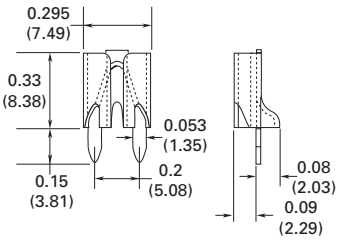


Catalog no. 1A5780

- 15 A
- Nickel-plated brass/glass-filled nylon

Dimensions — mm (in)

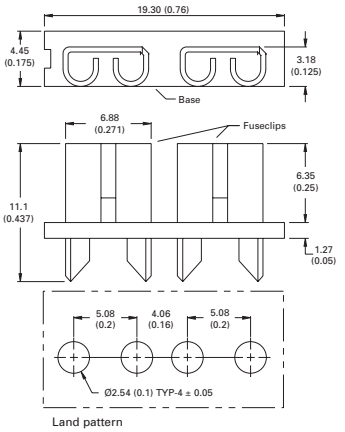


**Data sheet no. ATM fuses 2128 (HHM, HHL)**
**ATC fuses 2107 (HHC, HHD, HHF, HHG)**
**Max fuses 2129 (HHX)**

**Data sheet no. 2131**

# Full range of small dimension fast-acting and time-delay fuses

- 5x15 mm
- 5x20 mm IEC
- 5x20 mm UL
- 1/4″ x 5/8″
- 1/4″ x 7/8″
- 1/4″ x 1″
- 1/4″ x 1-1/4″

PLUS
PCB fuse holders and clips

## Contents


| Description | | Section page |
|---|---|---|
| **Product** | **Catalog symbol/type** | |
| **Fuses** | | |
| 5x15 mm fuses | C515, C519 time-delay | 2 |
| | C518, C520 fast-acting | |
| | C517 fast acting | 3 |
| IEC 5x20 mm fuses | GDB, S500, S500-V fast-acting | |
| | GDA, S501, S501-V fast-acting | 4 |
| | S505, S506SC time-delay | |
| | GDC, S505H, S505H-V, S505SCH, S506 S506-V time-delay | 5 |
| UL 5x20 mm fuses | GMA, GMA-V fast-acting | 6 |
| | GMC, GMC-V time-delay | |
| | GMD GMD-V time-delay | 7 |
| 1/4" x 5/8" fuse | AGA fast-acting | |
| 1/4" x 7/8" fuse | AGW fast-acting | 8 |
| 1/4" x 1" fuse | AGX fast acting | |
| 1/4" x 1-1/4" fuses | AGC, AGC-V, ABC, ABC-V fast-acting | 9 |
| | GBB, GBB-V fast-acting | 10 |
| | MDL, MDL-V time-delay | |
| | MDQ, MDQ-V, MDA, MDA-V time-delay | 11 |
| **PCB holders and fuseclips** | | |
| 5x20 mm holders | H15-V, H15-H, HTC-60M | 12 |
| 1/4" x 1-1/4" holders | HBH-I, HBH-M, HBV-I, HBV-M, HBW-I, HBW-M | 13 |
| 5 mm fuseclips | HTC-15M, HTC-140M, HTC-200M, HTC-210M, 1A3399, 1A5018, 1A5601, 1A5602 | 14 |
| 1/4" fuseclips | 1A1119, 1A1120, 1A1907, 1A3398, 1A4533, 1A4534 | 15 |
| | 5681, 5682 | 16 |
| 9/32" fuseclips | 5674 | |
| 13/32" fuseclips | 5960 1A3400 | |
| 9/16" fuseclips | 5592 | |


**For blocks and holders, see the following pages in Section 8**


| Fuse diameter | Pages |
|---|---|
| **Panel mount blocks** | |
| 1/4" fuses | 4-5 |
| **Through panel holders** | |
| 5 mm fuses | 41 |
| 1/4" fuses | 41-42 |
| **In-line holders** | |
| 5 mm fuses | 46 |
| 1/4" fuses | 46-48 |

## C519 ferrule and C515 axial lead time-delay 5x15 mm glass tube fuses

RoHS 2011/65/EU

### Ratings

- Volts
  - 125 Vac (3.5-7 A)
  - 250 Vac (125mA-3 A)
  - 32 Vdc (self certified)
- Amps 125mA-7 A
- IR
  - 25 A (350mA @ 600 Vac)
  - 35 A (125mA-1A @ 250 Vac)
  - 100 A (1.25-3 A @ 250 Vac)
  - 400 A (3.5-7 A @ 125 Vac)
  - 10 kA (125mA-3 A @ 125 Vac)

### Agency information

- UL Listed, Guide JDYX, File E19180 125mA-250mA and 375mA-3 A, UL Recognized, Guide JDYX2, File E19180, 350mA and 3.5-7 A, CSA Certified, Class 1422-01, File 53787 125mA-250mA and 375mA-3 A, RoHS compliant, CE

### Features

- Time-delay for closer sizing on inductive circuits

### Typical application

- Electronic circuits
- Printed circuit boards

| Catalog no. (amps) | | | |
|---|---|---|---|
| **Ferrule** | | | |
| C519-125-R | C519-600-R | C519-1.6-R | C519-3.5-R |
| C519-250-R | C519-750-R | C519-2-R | C519-4-R |
| C519-350-R | C519-1-R | C519-2.25-R | C519-5-R |
| C519-375-R | C519-1.25-R | C519-2.5-R | |
| C519-500-R | C519-1.5-R | C519-3-R | |
| **Axial lead** | | | |
| C515-125-R | C515-750-R | C515-2-R | C515-5-R |
| C515-250-R | C515-800-R | C515-2.25-R | C515-6-R |
| C515-350-R | C515-1-R | C515-2.5-R | C515-7-R |
| C515-375-R | C515-1.25-R | C515-3-R | |
| C515-500-R | C515-1.5-R | C515-3.5-R | |
| C515-600-R | C515-1.6-R | C515-4-R | |

**Data sheet no. 2006 (C515) and 2007 (C519)**

## C520 ferrule and C518 axial lead fast-acting 5x15 mm glass tube fuses

RoHS 2011/65/EU

### Ratings

- Volts
  - 250 Vac
  - 32 Vdc (self certified)
- Amps 100mA-5 A
- IR
  - 35 A (100mA-750mA @ 250 Vac)
  - 10 kA (100mA-5 A @ 125 Vac)
  - 100 A (1.5-3.5 A @ 250 Vac)
  - 200 A (4-5 A @ 250 Vac)

### Agency information

- UL Recognized, Guide JDYX2, File E19180, CSA Certified, Class 1422-01, File 53787, RoHS compliant, CE

### Features

- Small footprint saves space in equipment
- Fast-acting for maximum component protection
- Available in ferrule and axial leaded configurations

### Typical applications

- Electronic circuits
- Printed circuit boards

| Catalog no. (amps) | | | |
|---|---|---|---|
| **Ferrule** | | | |
| C520-100-R | C520-500-R | C520-2.5-R | C520-5-R |
| C520-125-R | C520-750-R | C520-3-R | |
| C520-250-R | C520-1.5-R | C520-3.5-R | |
| C520-375-R | C520-2-R | C520-4-R | |
| **Axial lead** | | | |
| C518-100-R | C518-375-R | C518-2-R | C518-3.5-R |
| C518-125-R | C518-500-R | C518-2.5-R | C518-4-R |
| C518-250-R | C518-750-R | C518-3-R | C518-5-R |

**Data sheet no. 2026 (C518) and 2027 (C520)**

## C517 axial lead fast-acting 5x15 mm glass tube fuse

RoHS 2011/65/EU

### Ratings

- Volts
  - 350 Vac
  - 32 Vdc (self certified)
- Amps 3 A
- IR
  - 100 A @ 350 Vac*
  - 100 A @ 250 Vac
  - 10 kA @ 125 Vac

* 350 Vac/100 A IR is UL Recognized.

### Agency information

- UL Listed, Guide JDYX, File E19180, CSA Certified, Class 1422-01, File 53787, UL Recognized, Guide JDYX2, File E19180, RoHS compliant, CE

### Features

- Small footprint saves space in equipment
- Fast-acting for maximum component protection
- 350 Vac rating for 277 V ballast circuit protection

### Typical applications

- Electronic circuits
- Printed circuit boards
- Electronic ballast protection

**To order, use catalog number C517-3-R**

## S500 ferrule (GDB†) and S500-V axial lead fast-acting, low breaking capacity 5x20 mm glass tube fuses

RoHS 2011/65/EU

### Ratings

- Volts
  - 250 Vac (or less)
  - 32 Vdc (self certified)
- Amps 32mA-10 A
- IR
  - 35 A (32mA-3.15 A)
  - 40 A (4 A)
  - 63 A (6.3 A)
  - 80 A (8 A)
  - 100 A (10 A)

### Agency information

- cURus, SEMKO, VDE, BSI, IMQ, CCC, RoHS compliant, CE
- Agency information not applicable to all ratings; see data sheet for details.

### Features

- Fast-acting for maximum protection, conforms to IEC 60127-2 (160mA-10 A)

### Typical applications

- Electronic circuits

| Catalog no. (amps)* | | | |
|---|---|---|---|
| S500-32-R | S500-160-R | S500-800-R | S500-4-R |
| S500-40-R | S500-200-R | S500-1-R | S500-5-R |
| S500-50-R | S500-250-R | S500-1.25-R | S500-6.3-R |
| S500-63-R | S500-315-R | S500-1.6-R | S500-8-R |
| S500-80-R | S500-400-R | S500-2-R | S500-10-R |
| S500-100-R | S500-500-R | S500-2.5-R | |
| S500-125-R | S500-630-R | S500-3.15-R | |

* GDB is not available with axial leads. To order axial leads, place "V" in the S500 catalog number. E.g., S500-**V**-32-R.
† When ordering GDB versions, do not add "-R" suffix to catalog number.

## S501 ferrule (GDA†) and S501-V Axial lead fast-acting high breaking capacity 5x20 mm ceramic tube fuses

### Ratings

- Volts
  - 250 Vac (or less)
  - 32 Vdc (self certified)
- Amps 50mA-10 A**
- IR 1500 A @ 250 Vac

### Agency information

- cURus, SEMKO, VDE, IMQ, CCC, CSA, BSI, MITI/JET, RoHS compliant, CE
- Agency information not applicable to all ratings, see data sheet for details.

### Features

- Fast-acting for maximum protection
- High break capacity for use in higher fault energy electronic circuitry
- Conforms to IEC standards

### Typical applications

- Electronic circuits

| Catalog no. (amps)* | | | |
|---|---|---|---|
| S501-50-R | S501-200-R | S501-800-R | S501-3.15-R |
| S501-63-R | S501-250-R | S501-1-R | S501-4-R |
| S501-80-R | S501-315-R | S501-1.25-R | S501-5-R |
| S501-100-R | S501-400-R | S501-1.6-R | S501-6.3-R |
| S501-125-R | S501-500-R | S501-2-R | S501-8-R |
| S501-160-R | S501-630-R | S501-2.5-R | S501-10-R |

* GDA is not available with axial leads. To order axial leads, place "V" in the S501 catalog number. E.g., S501-**V**-125-R.
† When ordering GDA version, do not add "-R" suffix to catalog number, GDA is not available above 6.3 A.

## S505 ferrule, and S505SC axial lead time-delay, high-breaking capacity 5x20 mm ceramic tube fuses

### Ratings

- Volts
  - 250 Vac (or less)
  - 32 Vdc (self certified)
- Amps 500mA-12 A
- IR 1500 A @ 250 Vac

### Agency information

- cURus, CSA, IMQ, VDE, SEMKO, CCC/CQC, PSE/JET, KC, BS, RoHS compliant
- Agency information not applicable to all ratings, see data sheet for details.

### Features

- Time-delay performance ideal for inductive circuits.
- Conforms to IEC standards.

### Typical applications

- Electronic circuits

| Catalog no. (amps)* | | | |
|---|---|---|---|
| S505-500-R** | S505-1.6-R | S505-4-R | S505-10-R |
| S505-800-R** | S505-2-R | S505-5-R | S505-12-R** |
| S505-1-R | S505-2.5-R | S505-6.3-R | |
| S505-1.25-R | S505-3.15-R | S505-8-R | |

* To order axial leads, place "SC" in catalog number. E.g., S505**SC**-2-R.
**Axial leads not available.

**Data sheet no. 2051 (S501), 2014 (GDA)**

**Data sheet no. 2037**

## S505H ferrule, and S505H-V and S505SCH axial time-delay high breaking capacity 5x20 mm ceramic tube fuses

RoHS 2011/65/EU

### Ratings

- Volts
  - 600 Vac/400 Vdc (S505H 500mA-5 A
  - 500 Vac/400 Vdc (S505H 6.3-10 A)
  - 250 Vac (S505SCH)
- Amps
  - 500mA-10 A (S505H)
  - 3.15-6.3 A (S505SCH)
- IR @ 250 Vac
  - 35 A (S505H)
  - 1.5 kA (S505SCH / 50 Hz / 250 Vac / 400 Vdc)
  - 100 A max AC

### Agency information

- cURus, CCC, CQC, TUV, PSE/JET (S505H)
- cURus, KC, CQC, TUV (S505SCH)
- RoHS compliant
- Agency information not applicable to all ratings; see data sheets for details.

### Features

- Time-delay, high breaking capacity
- Conforms to IEC standards

### Typical applications

- Power supplies/adapters
- Desktops/notebooks

| Catalog no. (amps) | | | |
|---|---|---|---|
| **S505H*** | | | |
| S505H-500-R | S505H-1.6-R | S505H-4-R | S505H-10-R |
| S505H-800-R | S505H-2-R | S505H-5-R | |
| S505H-1-R | S505H-2.5-R | S505H-6.3-R | |
| S505H-1.25-R | S505H-3.15-R | S505H-8-R | |
| **S505SCH (axial lead only** | | | |
| S505SCH-3.15-R | S505SCH-5-R | S505SCH-6.3-R | |

* To order an axial lead S505H fuse, place "V" in catalog number. E.g., S505H-**V**-5-R.

## S506 ferrule (GDC†) and S506-V axial lead time-delay low breaking capacity 5x20 mm glass tube fuses

RoHS 2011/65/EU

### Ratings

- Volts
  - 250 Vac (or less)
  - 32 Vdc (self certified)
- Amps 32mA-15 A**
- IR 35 A @ 250 Vac

### Agency information

- UR, CSA, cURus, SEMKO, VDE, BSI, IMQ, VDE, PSE/JET, CCC, RoHS compliant
- Agency information not applicable to all ratings; see data sheet for details.

### Features

- Time-delay for inductive circuits
- Conforms to IEC standards

### Typical applications

- Electronic circuits

| Catalog no. (amps)* | | | |
|---|---|---|---|
| S506-32-R | S506-160-R | S506-800-R | S506-4-R |
| S506-40-R | S506-200-R | S506-1-R | S506-5-R |
| S506-50-R | S506-250-R | S506-1.25-R | S506-6.3-R |
| S506-63-R | S506-315-R | S506-1.6-R | S506-8-R |
| S506-80-R | S506-400-R | S506-2-R | S506-10-R |
| S506-100-R | S506-500-R | S506-2.5-R | S506-12.5-R |
| S506-125-R | S506-630-R | S506-3.15-R | S506-15-R |

* GDC is not available with axial leads. To order axial leads, place "V" in the S506 catalog number. E.g., S506-**V**-15-R.
† When ordering GDC version, do not add "-R" suffix to catalog number., GDC fuses are not available above 6.3 A.

## GMA ferrule and GMA-V axial leads fast-acting 5x20 mm glass tube fuses

RoHS 2011/65/EU

### Ratings

- Volts
  - 250 Vac (63mA-3 A)
  - 125 Vac (3.15-15 A)
  - 32 Vdc (self certified)
- Amps 63mA-15 A
- IR
  - 35 A (63mA-1 A @ 250 Vac, p.f. = 0.7-0.8)
  - 10 kA (63mA-6 A @ 125 Vac, p.f. = 0.7-0.8)
  - 100 A (1.25-2.5 A @ 250 Vac, p.f. = 0.7-0.8)
  - 200 A (7-8 A @ 125 Vac, p.f. = 1.0)
  - 150 A (10-15 A @ 125 Vac, p.f. = 1.0)

### Agency information

- UL Listed, Std. 248-14 Guide JDYX, File E19180 up to 6 A, UL Recognized, Guide JDYX2, File E19180, 7-15 A, CSA Certified, Class 1422-01,File 53787 up to 6 A, PSE Approval 1-15 A, RoHS compliant, CE

### Features

- Fast-acting for maximum protection

### Typical applications

- Electronic circuits

| Catalog no. (amps)* | | | |
|---|---|---|---|
| GMA-63-R | GMA-600-R | GMA-2-R | GMA-7-R |
| GMA-100-R | GMA-750-R | GMA-2.5-R | GMA-8-R |
| GMA-125-R | GMA-800-R | GMA-3.15-R | GMA-10-R |
| GMA-200-R | GMA-1-R | GMA-3.5-R | GMA-15-R |
| GMA-250-R | GMA-1.25-R | GMA-4-R | |
| GMA-300-R | GMA-1.5-R | GMA-5-R | |
| GMA-500-R | GMA-1.6-R | GMA-6-R | |

* To order axial leads, place "V" in catalog number. E.g., GMA-**V**-8-R.

**Data sheet no. 2017**

## GMC ferrule and GMC-V axial lead medium time-delay 5x20 mm glass tube fuses

RoHS 2011/65/EU

### Ratings

- Volts
  - 250 Vac (63mA-3.15 A)
  - 125 Vac (3.5-10 A)
  - 32 Vdc (self certified)
- Amps 63mA-10 A
- IR
  - 35 A (63mA-1 A @ 250 Vac, p.f. = 0.7-0.8)
  - 10 kA (63mA-6 A @ 125 Vac, p.f. = 0.7-0.8)
  - 100 A (1.25-3.15 A @ 250 Vac, p.f. = 0.7-0.8)
  - 200 A (6.3-10 A @ 125 Vac, p.f. = 1.0)

### Agency information

- UL Listed, Std. 248-14, Guide JDYX, File E19180 up to 6.3 A, UL Recognized, Guide JDYX2, File E19180 7-10 A, CSA Certified, Class 1422-01, File 53787 up to 6.3 A, MITI Approval, 1-10 A, KC, RoHS compliant, CE
- KC not applicable to all ratings; see data sheet for details

### Features

- Conforms to UL standards

### Typical applications

- Electronic circuits

| Catalog no. (amps)* | | | |
|---|---|---|---|
| GMC-63-R | GMC-315-R | GMC-1.25-R | GMC-5-R |
| GMC-80-R | GMC-400-R | GMC-1.5-R | GMC-6-R |
| GMC-100-R | GMC-500-R | GMC-1.6-R | GMC-6.3-R |
| GMC-125-R | GMC-600-R | GMC-2-R | GMC-7-R |
| GMC-150-R | GMC-630-R | GMC-2.5-R | GMC-8-R |
| GMC-200-R | GMC-750-R | GMC-3.15-R | GMC-10-R |
| GMC-250-R | GMC-800-R | GMC-3.5-R | |
| GMC-300-R | GMC-1-R | GMC-4-R | |

* To order axial leads, place "V" in catalog number. E.g., GMC-**V**-5-R.

**Data sheet no. 4395**

## GMD ferrule and GMD-V axial leads time-delay 5x20 mm glass tube fuses

RoHS 2011/65/EU

### Ratings

- Volts
  - 250 Vac
  - 32 Vdc (self certified)
- Amps 125mA-4 A
- IR
  - 10 kA (125mA-3 A @ 125 Vac, p.f. = 0.7-0.8)
  - 10 kA (4 A @ 125 Vac, p.f. = 1.0)
  - 35 A (125mA-1 A @ 250 Vac, p.f. = 0.7-0.8)
  - 100 A (1.2-3. A @ 250 Vac, p.f. = 0.7-0.8)
  - 200 A (4 A @ 250 Vac, p.f. = 1.0)

### Agency information

- UL Listed Guide JDYX, File E19180, UL Recognized Card (4 A), Guide JDYX2, File E19180, 4 A, CSA Certified, Class 1422-01, File 53787, PSE/JET, File 1641-31003-1001, RoHS complaint, CE
- Agency information not applicable to all ratings; see data sheet for details

### Features

- Time-delay for inductive circuits
- Conforms to UL standards

### Typical applications

- Electronic circuits

| Catalog no. (amps)* | | | |
|---|---|---|---|
| GMD-125-R | GMD-375-R | GMD-800-R | GMD-2-R |
| GMD-150-R | GMD-400-R | GMD-1-R | GMD-2.5-R |
| GMD-200-R | GMD-500-R | GMD-1.2-R | GMD-3-R |
| GMD-250-R | GMD-600-R | GMD-1.25-R | GMD-4-R |
| GMD-300-R | GMD-630-R | GMD-1.5-R | |
| GMD-315-R | GMD-750-R | GMD-1.6-R | |

* To order axial leads, place "V" in catalog number. E.g., GMD-**V**-2.5-R.

## AGA fast-acting 1/4″ x 5/8″ glass tube fuse

### Ratings

- Volts
  - 125 Vac (or less)
  - 32 Vdc (self certified)
- Amps 1-30 A
- IR
  - 10 kA (1 to 1-1/2 A @ 125 Vac)
  - 200 A (2-5 A @ 125 Vac)
  - 1000 A (6-30 A @ 32 Vac)

### Agency information

- UL Listed, Std. 248-14, Guide JDYX, File E19180 up to 3-1/2 A UL Recognized, Guide JDYX2 12-30 A, CE

### Features

- Fast-acting for maximum protection
- Size rejects insertion of other fuse types

### Typical applications

- Electronic circuits

| Catalog no. (amps) | | | |
|---|---|---|---|
| AGA-1 | AGA-3 | AGA-7-1/2 | AGA-25 |
| AGA-1-1/2 | AGA-5 | AGA-10 | AGA-30 |
| AGA-2 | AGA-6 | AGA-15 | |
| AGA-2-1/2 | AGA-7 | AGA-20 | |



Data sheet no. 2019
Data sheet no. 2039

## AGW fast-acting 1/4″ x 7/8″ glass tube fuse

### Ratings

- Volts
  - 32 Vac
  - 32 Vdc (self certified)
- Amps 1-30 A
- IR 1 kA AC

### Features

- Fast-acting for maximum protection

### Typical applications

- Electronic circuits

| Catalog no. (amps) | | | |
|---|---|---|---|
| AGW-1 | AGW-3 | AGW-7-1/2 | AGW-25 |
| AGW-1-1/2 | AGW-4 | AGW-10 | AGW-30 |
| AGW-2 | AGW-5 | AGW-15 | |
| AGW-2-1/2 | AGW-6 | AGW-20 | |

## AGX fast-acting 1/4″ x 1″ glass tube fuse

### Ratings

- Volts
  - 250 Vac (1//4-20 A)
  - 125 Vac (25-30 A)
  - 32 Vdc (1/4-30 A)
- Amps 1/4-30 A
- IR
  - 35 A (1/4-1 A @ 250 Vac)
  - 10 kA (1/4-10 A @ 125 Vac)
  - 200 A (15-20 A @ 125 Vac)
  - 100 A (25-30 A @ 125 Vac)
  - 1000 A (8-30 A @ 32 Vac)

### Agency information

- cULus up to 10 A, Guide JDYX, File E 19180 and Guide JDYX7, File E19180, UL Recognized Card 15-30 A Guide JDYX2, File E19180, CSA Component Acceptance Card 15-30 A Class No. 1422-01, File 53787, RoHS compliant

### Features

- Size rejects insertion of other fuse types

### Typical applications

- Electronic circuits

| Catalog no. (amps) | | | |
|---|---|---|---|
| AGX-1/4 | AGX-1 | AGX-4 | AGX-15 |
| AGX-3/10 | AGX-1-1/4 | AGX-5 | AGX-20 |
| AGX-3/8 | AGX-1-1/2 | AGX-6 | AGX-25 |
| AGX-4/10 | AGX-2 | AGX-7 | AGX-30 |
| AGX-1/2 | AGX-2-1/2 | AGX-8 | |
| AGX-3/4 | AGX-3 | AGX-10 | |

Data sheet no. 2040

Data sheet no. 2041

## AGC ferrule and AGC-V axial lead fast-acing 1/4" x 1-1/4˝ glass tube fuses

### Ratings

- Volts
  - 250 Vac (1/20-10 A)
  - 32 Vac (12-40 A)
  - 32 Vdc (self certified)
- Amps 1/20-40 A
- IR
  - 35 A (1/20-1 A @ 250 Vac)
  - 100 A (11/4-3 A @ 250 Vac)
  - 200 A (4-10 A @ 250 Vac)
  - 10 kA (1/20-10 A @ 125 Vac)
  - 1000 A (12-40 A @ 32 Vac)

### Agency information

- UL Listed, Guide JDYX, File E19180, up to 10 A, UL Recognized, Guide JDYX2, File E19180, 12-30 A, CSA Certified, Class 1422-01, CSA Component Acceptance Card, Class No. 1422-30, RoHS compliant, CE

### Features

- Original electronic glass tube fuse
- Fast-acting for maximum protection
- Wide amp/volt ratings allow versatility of protecting electronic circuits

### Typical applications

- Electronic circuits

| Catalog no. (amps)* | | | |
|---|---|---|---|
| AGC-1/20-R | AGC-3/4-R | AGC-5-R | AGC-15-R |
| AGC-1/10-R | AGC-1-R | AGC-6-R | AGC-20-R |
| AGC-1/8-R | AGC-1-1/4-R | AGC-7-R | AGC-25-R |
| AGC-3/16-R | AGC-1-1/2-R | AGC-7-1/2-R | AGC-30-R |
| AGC-2/10-R | AGC-2-R | AGC-8-R | AGC-35-R |
| AGC-1/4-R | AGC-2-1/4-R | AGC-9-R | AGC-40-R |
| AGC-3/10-R | AGC-2-1/2-R | AGC-10-R | |
| AGC-3/8-R | AGC-3-R | AGC-12-R | |
| AGC-1/2-R | AGC-4-R | AGC-14-R | |

* To order axial leads, place "V" in catalog number. E.g., AGC-**V**-1/10-R.

## ABC ferrule and ABC-V axial leads fast-acting 1/4" x 1-1/4˝ ceramic tube fuse

### Ratings

- Volts
  - 250 Vac/125 Vdc (1/4-15 A, 20-30 A)*
  - 250 Vac (18 A)
  - 32 Vdc (self certified)
- Amps 1/4-30 A
- IR**
  - 35 A (1/4-1 A @ 250 Vac)
  - 100 A (11/2-3 A @ 250 Vac)
  - 200 A (4-10 A @ 250 Vac)
  - 750 A (12-15 A @ 250 Vac)
  - 400 A (18-20 A @ 250 Vac)
  - 10 kA (1/4-15 A @ 125 Vac)
  - 1 kA (18-30 A @ 125 Vac)
  - 10 kA (1/4-15, 20 A @ 125 Vdc)
  - 400 A (25-30 A @ 125 Vdc)
  - 200 A (25-30 A @ 250 Vac)

* CSA approvals for 25 A and 30 A are at 125 Vac – IR 1000 A and Vdc – IR 400 A (IR 1000 A at 75 Vdc)

** Interrupting ratings measured at 70% – 80% power factor on AC. The interrupting ratings for 18 A and 20 A were measured at 85%-95% power factor on AC. The interrupting ratings for 25 A and 30 A were measured at 89% power factor on AC.

### Agency information

- UL Listed, Std. 248-14, Guide JDYX File E19180 up to 15 A; UL Recognized, Guide JDYX2, File E19180, 18-30 A; CSA Certified, Class 1422-01 and 1422-30, File 53787, RoHS compliant, CE

### Features

- Ceramic body allows for higher amp/volt rating combinations

### Typical applications

- Electronic circuits

| Catalog no. (amps) | | | |
|---|---|---|---|
| ABC-1/4-R | ABC-2-R | ABC-6-R | ABC-15-R |
| ABC-1/2-R | ABC-2-1/2-R | ABC-7-R | ABC-18-R |
| ABC-3/4-R | ABC-3-R | ABC-8-R | ABC-20-R |
| ABC-1-R | ABC-4-R | ABC-10-R | ABC-25-R |
| ABC-1-1/2-R | ABC-5-R | ABC-12-R | ABC-30-R |

* To order axial leads, place "V" in catalog number. E.g., ABC-**V**-7-R.



Data sheet no. 2543
Data sheet no. 2000

## GBB ferrule and GBB-V axial lead very-fast-acting 1/4" x 1-1/4˝ ceramic tube fuses

### Ratings

- Volts 250 Vac/125 Vdc
- Amps 1-30 A
- IR
  - 200 A @ 250 Vac
  - 200 A (20-30 A @ 125 Vac/dc)
  - 10 kA (1-15 A @ 125 Vac/dc)

### Agency information

- UL Recognized, Std. 248-14, Guide JFHR2, File E56412, CSA Component Acceptance Class 1422-30, File 53787, RoHS complaint, CE

### Features

- Very fast-acting performance allows protection of highly sensitive electronic circuitry

### Typical applications

- Electronic circuits

| Catalog no. (amps)* | | | |
|---|---|---|---|
| GBB-1-R | GBB-4-R | GBB-8-R | GBB-15-R |
| GBB-1-1/4-R | GBB-5-R | GBB-9-R | GBB-20-R |
| GBB-2-R | GBB-6-R | GBB-10-R | GBB-25-R |
| GBB-3-R | GBB-7-R | GBB-12-R | GBB-30-R |

* To order axial leads, place "V" in catalog number. E.g., GBB-**V**-10-R.

## MDL ferrule and MDL-V axial lead time-delay 1/4" x 1-1/4˝ glass tube fuses

### Ratings

- Volts
  - 250 Vac (1/16-8 A)
  - 32 Vac (9-30 A)
  - 32 Vdc (self certified)
- Amps 1/16-30 A
- IR*
  - 35 A (1/16-1 A @ 250 Vac)
  - 100 A (11/4-3 A @ 250 Vac)
  - 200 A (4-8 A @ 250 Vac)
  - 10000 A (1/16-8 A @ 125 Vac)
  - 1000 A (9-30 A @ 32 Vac)

* Interrupting ratings were measured at 70% – 80% power factor on AC, and at a time constant described in UL 198L.

### Agency information

- UL Listed, Guide JDYX, File E19180 up to 8 A; CSA Certified Class 1422-01 up to 8 A; UL Recognized, Guide JDYX2, File E19180, 9-30 A; CSA Component Acceptance, Class 1422-30, 9-30 A, RoHS compliant, CE

### Features

- Time-delay allows close sizing on inductive circuits

### Typical applications

- Electronic circuits

| Catalog no. (amps)* | | | |
|---|---|---|---|
| MDL-1/16-R | MDL-1/2-R | MDL-3-R | MDL-10-R |
| MDL-1/10-R | MDL-3/4-R | MDL-3-2/10-R | MDL-12-R |
| MDL-1/8-R | MDL-1-R | MDL-4-R | MDL-15-R |
| MDL-2/10-R | MDL-1-1/4-R | MDL-5-R | MDL-20-R |
| MDL-3/16-R | MDL-1-1/2-R | MDL-6-R | MDL-25** |
| MDL-1/4-R | MDL-2-R | MDL-7-R | MDL-30** |
| MDL-3/10-R | MDL-2-1/4-R | MDL-8-R | |
| MDL-3/8-R | MDL-2-1/2-R | MDL-9-R | |

* To order axial leads, place "V" in catalog number. E.g., MDL-**V**-3-R.
**RoHS compliant construction not available.

**Data sheet no. 2013**

**Data sheet no. 2004**

## MDQ ferrule and MDQ-V axial lead dual-element, time-delay 1/4" x 1-1/4˝ glass tube fuses

### Ratings

- Volts
  - 250 Vac (1/100-7 A)
  - 32 Vac (7-1/2 to 15 A)
  - 32 Vdc (self certified)
- Amps 1/100-15 A
- IR
  - 35 A (1/100-1 A @ 250 Vac)
  - 100 A (1-1/4 to 3 A @ 250 Vac)
  - 200 A (4-7 A @ 250 Vac)
  - 1000 A (7-1/2 to 12 A @ 32 Vac)

### Agency information

- UL Listed, Std. 248-14, Guide JDYX, File E19180 1/16-7 A, CSA Component Acceptance, Class 1422-01, File 47233 1/16 -15 A, UL Recognized, Guide JDYX2, File E19180, 7-1/2-15 A.

### Features

- Dual-element design allows closer sizing to inductive circuits than any other fuses

### Typical applications

- Electronic relay and control circuits

| Catalog no. (amps)* | | | |
|---|---|---|---|
| MDQ-1/100 | MDQ-3/10 | MDQ-1-1/2 | MDQ-5 |
| MDQ-1/32 | MDQ-3/8 | MDQ-1-6/10 | MDQ-6 |
| MDQ-1/16 | MDQ-4/10 | MDQ-1-8/10 | MDQ-6-1/4 |
| MDQ-1/10 | MDQ-1/2 | MDQ-2 | MDQ-7 |
| MDQ-1/8 | MDQ-6/10 | MDQ-2-1/4 | MDQ-7-1/2 |
| MDQ-15/100 | MDQ-3/4 | MDQ-2-1/2 | MDQ-8 |
| MDQ-175/1000 | MDQ-8/10 | MDQ-2-8/10 | MDQ-9 |
| MDQ-3/16 | MDQ-1 | MDQ-3 | MDQ-10 |
| MDQ-2/10 | MDQ-1-2/10 | MDQ-3-2/10 | MDQ-12 |
| MDQ-1/4 | MDQ-1-1/4 | MDQ-4 | MDQ-15 |

* To order axial leads, place "V" in catalog number. E.g., MDQ-**V**-1-1/4.

## MDA ferrule and MDA-V axial lead time-delay 1/4" x 1-1/4˝ ceramic tube fuses

### Ratings

RoHS 2011/65/EU

- Volts
  - 250 Vac (or less)
  - 125 Vdc (20-30 A)
  - 32 Vdc (self certified)
- Amps 1/4-30 A
- IR**
  - 35 A (1/4 to 1 A @ 250 Vac)
  - 100 A (1-1/2 to 2 A @ 250 Vac)
  - 200 A (2-1/2 to 10 A @ 250 Vac)
  - 750 A (12-15 A @ 250 Vac)
  - 1500 A (20-30 A @ 250 Vac)
  - 10 kA (1/4-30 A @ 125 Vac)
  - 10 kA (20-30 A @ 125 Vdc)

**Interrupting ratings were measured at 70% – 80% power factor on AC, and at a time constant described in UL 248.

### Agency information

- UL Listed, Std. 248-14, Guide JDYX, File E19180 up to 20 A, CSA Certified, Class 1422-01, File 53787 up to 20 A.
  UL Recognized, Guide JDYX2, File E19180, 25-30 A, CSA Component Acceptance, Class 1422-30, 25-30 A, RoHS compliant, CE

### Features

- Ceramic body for higher amp/volt ratings
- Inventory consolidation by replacing MDL fuses allows for reduced SKU investment and minimizing potential for misapplying fuse

### Typical applications

- Electronic circuits

| Catalog no. (amps)* | | | |
|---|---|---|---|
| MDA-1/4-R | MDA-2-R | MDA-6-R | MDA-15-R |
| MDA-1/2-R | MDA-2-1/2-R | MDA-7-R | MDA-20-R |
| MDA-3/4-R | MDA-3-R | MDA-8-R | MDA-25 A-R |
| MDA-1-R | MDA-4-R | MDA-10-R | MDA-30 A-R |
| MDA-1-1 /2-R | MDA-5-R | MDA-12-R | |

* To order axial leads, place "V" in catalog number. E.g., MDA-**V**-1-1/2-R.

## H15-V vertical mount 5 mm fuse holder with threaded cap

RoHS 2011/65/EU

### Ratings

- Volts 250 Vac
- Amps 10 A (cURus and VDE)
- Temperature rise 41°C

### Agency information

- cURus Recognized, Guide IZLT2/IZLT8, File E14853
- VDE File 40039714

### Materials

- Tin-plated clip
- Tin-plated copper terminals
- Thermoplastic body (UL 94V0, glow wire test: 960°C per IEC 695-2-1)

| Catalog no. | Carton qty. |
|---|---|
| BK-H15-V-1 | 200 |
| BK1-H15-V-1 | 1000 |
| BK-H15-V-1-B | 100 holder body only |
| BK-H15-V-1-K | 100 holder cap only |

### Dimensions - in (mm)

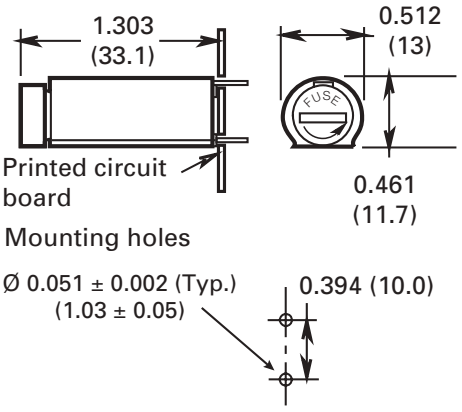


## H15-H horizontal mount 5 mm fuse holder with threaded cap

RoHS 2011/65/EU

### Ratings

- Volts 250 Vac
- Amps 10 A (cURus) 6.3 A (VDE)
- Temperature rise 41°C

### Agency information

- cURus Recognized, Guide IZLT2/IZLT8, File E14853
- VDE File 40039714

### Materials

- Tin-plated clip
- Tin-plated copper terminals
- Thermoplastic body (UL 94V0, glow wire test: 960°C per IEC 695-2-1)

| Catalog no. | Carton qty. |
|---|---|
| BK-H15-H-1 | 200 |
| BK1-H15-H-1 | 1000 |
| BK-H15-H-1-B | 100 holder body only |
| BK-H15-H-1-K | 100 holder cap only |

### Dimensions - in (mm)

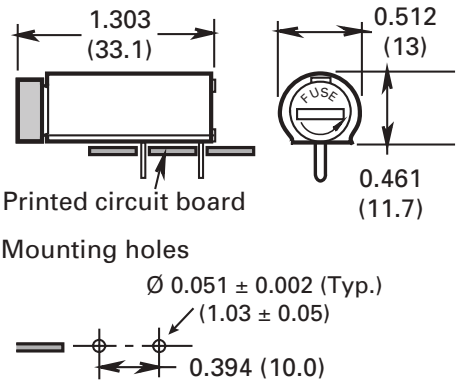


## HTC-60M four-leg stand-off mount 5 mm fuse holder

RoHS 2011/65/EU

### Ratings

- Volts 250 Vac
- Amps 6.3 (cURus and VDE)

### Agency information

- cURus Recognized, Guide IZLT2/IZLT8, |File E14853
- VDE File 4004459

### Materials

- Tin-plated brass terminals

| Catalog no. | Qty. |
|---|---|
| HTC-60M | 10 |
| BK-HTC-60M | 100 (bulk) |

### Dimensions - in (mm)

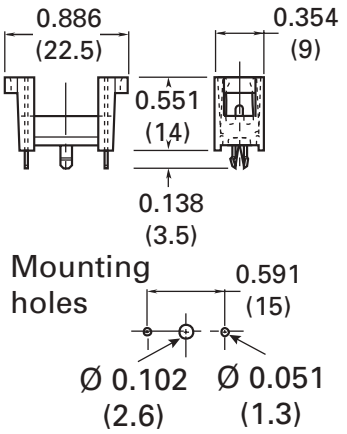

## HBH-I (1/4" x 1-1/4˝) and HBH-M (5x20 mm) horizontal mount fuse holders

### Dimensions - in (mm)

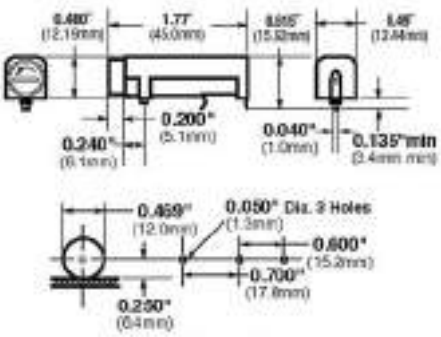


## HBV-I (1/4" x 1-1/4˝) and HBV-M (5x20 mm) vertical mount fuse holders with stability pins

### Dimensions - in (mm)

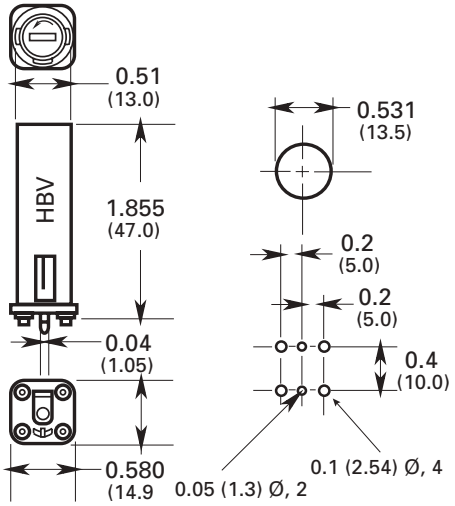


## HBW-I (1/4" x 1-1/4˝) and HBW-M (5x20 mm) vertical mount fuse holder without stability pins

### Dimensions - in (mm)

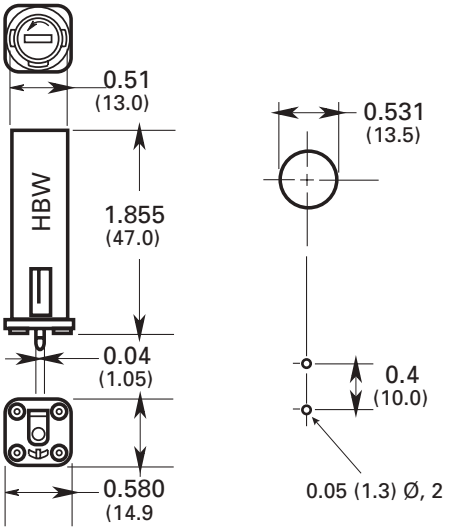


### Ratings

- UL 16 A/250 V
- CSA 12 A/250 V
- VDE 6.3 A/250 V
- SEMKO 10 A/250 V

### Agency information

- UL Recognized, Guide IZLT2, File EI4853, CSA Certified, Class 6225-01, File 47235, VDE 4009241 (HBV, HBW), SEMKO 800444, CE

### Electrical

- Insulation resistance 10 MΩ 500 Vdc
- Contact resistance less than 0.005 Ω @ 200mV
- Dielectric strength over 200 V/mil

### Material

- High dielectric molded phenolic with a UL 94V0 flammability rating
- Fuse carrier and knob: spring-loaded, bayonet-type, tin-plated brass with screwdriver slot

### Mounting

- "Kicked" terminals (all) and stability pins on HBV and HBW
- Temperature rating (RTI): body 150°C, knob 130°C

### Replacement fuse caps

FBI and FBM fuse caps fit PCB fuse holders HBH-_, HBV-_ and HBW-_.

To order, specify Catalog numbers:

- FBI for 1/4" diameter fuses
- FBM for 5 mm diameter fuses

FBI

FBM

## HTC-15M, HTC-140M 5 mm fuse holder and snap-on cover

### Ratings

- 250 V / 6.3 A / 1.6 W

### Agency information

- cURus, Guide 1ZLT2 and IZLT8, File E14853
- VDE 40004458
- RoHS compliant

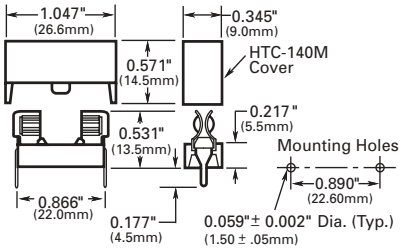


| Catalog no. | Description |
|---|---|
| HTC-15M | Holder only |
| HTC-140M | Holder with natural color cover |
| HTC-150M* | Holder with transparent cover |

* Available in bulk only, order BK/HTC-150M.

## HTC-200M 5 mm fuseclip

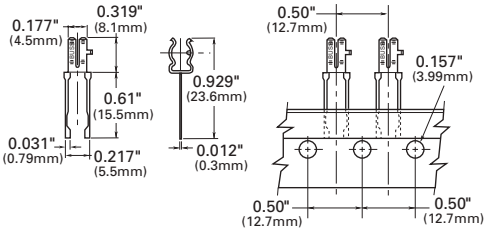


| Catalog no. | Material | Description |
|---|---|---|
| HTC-200M | Tin-plated bronze | Tape and fan fold pack |
| AP/HTC-200M | | Ammo pack 1000 pieces per box |

## HTC-210M 5 mm fuseclip with end stops

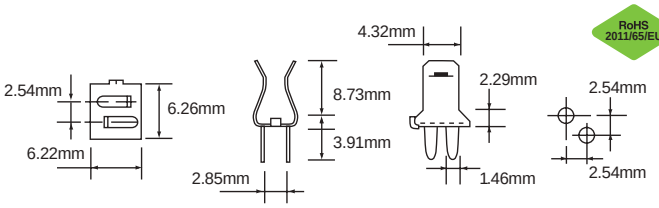


| Catalog no. | Material | Description |
|---|---|---|
| HTC-210M | Tin-plated bronze | Tape and fan fold pack |
| AP/HTC-210M | | Ammo pack 1000 pieces per box |

## 1A3399 low profile 5 mm fuseclips with end stops and straight leads

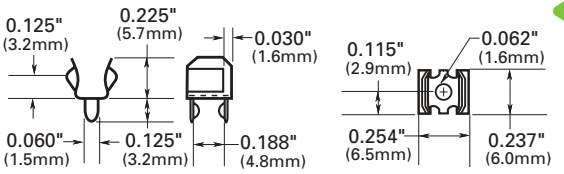


| Catalog no. | Material* | Finish |
|---|---|---|
| 1A3399-01 | BeCu | Silver |
| 1A3399-04-R | BeCu | Bright tin |
| 1A3399-10-R | Copper alloy | Bright tin |

* BeCu recommended for more than 15 A.

## 1A5018 high profile 5 mm fuseclips with end stops and straight leads

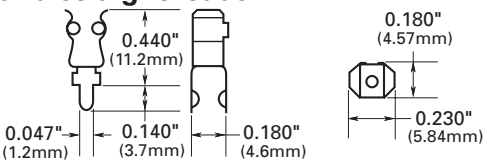


| Catalog no. | Material* | Finish |
|---|---|---|
| 1A5018-07 | Copper alloy | Silver |
| 1A5018-10-R | Copper alloy | Bright tin |

* BeCu 1A3399 fuseclips recommended for more than 15 A.

## 1A5601 5 mm fuseclip (≤ 7 A)

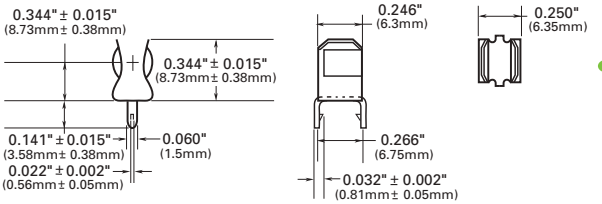


| Catalog no. | Material | Finish |
|---|---|---|
| 1A5601 | Cartridge brass | Bright tin |

## 1A5602 fuseclip with end stops (≤ 7 A)

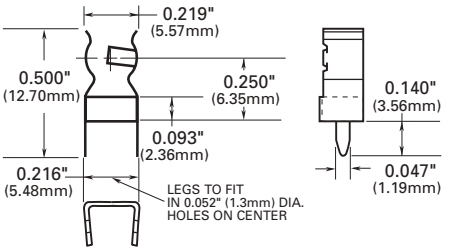


| Catalog no. | Material | Finish |
|---|---|---|
| 1A5602 | Cartridge brass | Bright tin |

**Data sheet no. 2110**

**Data sheet no. 2131**

## 1A1119 1/4" fuseclips with end stops and angled-in leads

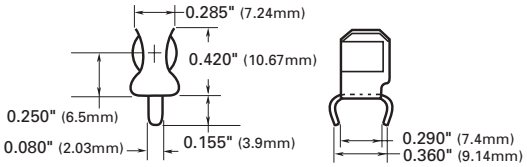


| Catalog no. | Material* | Finish |
|---|---|---|
| 1A1119-04-R | High performance copper | Bright tin |
| 1A1119-05 | High performance copper | Silver |
| 1A1119-10-R | Cartridge brass | Bright tin |

* High performance copper recommended for more than 15 A.

## 1A3398 PCB 1/4" fuseclips without end stops with straight leads

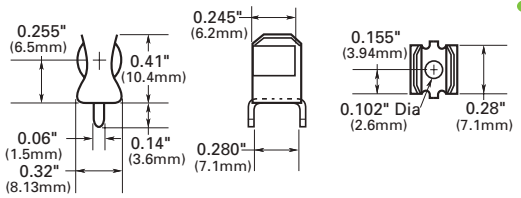


| Catalog no. | Material | Finish |
|---|---|---|
| 1A3398-07-R | Cartridge brass | Bright tin |

## 1A1120 1/4" fuseclips without end stops or angled-in leads

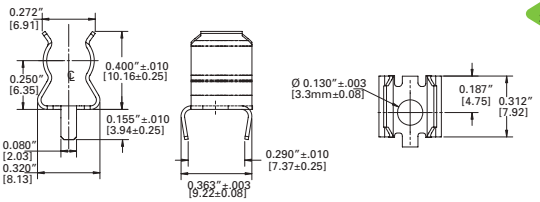


| Catalog no. | Material* | Finish |
|---|---|---|
| 1A1120-02 | Cartridge brass | None/bright dipped |
| 1A1120-05 | High performance copper | Silver |
| 1A1120-06-R | High performance copper | Bright tin |
| 1A1120-09-R | Cartridge brass | Bright tin |

* High performance copper recommended for more than 15 A.

## 1A4533 1/4" fuseclips without end stops or angled out leads

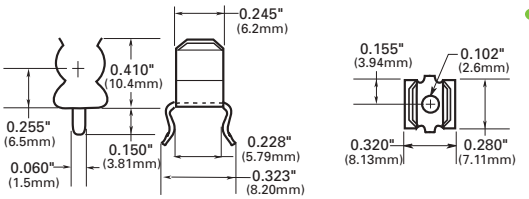


| Catalog no. | Material* | Finish |
|---|---|---|
| 1A4533-01-R | High performance copper | Bright tin |
| 1A4533-06-R | Cartridge brass | Bright tin |

* High performance copper recommended for more than 15 A.

## 1A1907 1/4" fuseclips with end stops and straight leads

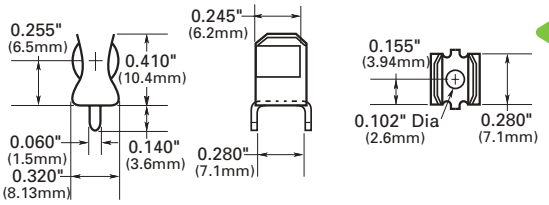


| Catalog no. | Material* | Finish |
|---|---|---|
| 1A1907-02 | Cartridge brass | None/bright dipped |
| 1A1907-03-R | High performance copper | Bright tin |
| 1A1907-05 | High performance copper | Silver |
| 1A1907-06-R | Cartridge brass | Bright tin |

* High performance copper recommended for more than 15 A.

## 1A4534 1/4" fuseclips with end stops and angled out leads

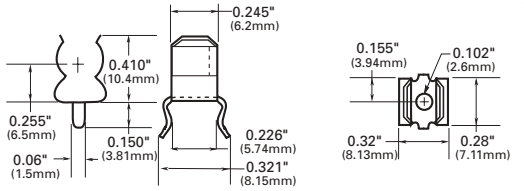


| Catalog no. | Material* | Finish |
|---|---|---|
| 1A4534-01-R | High performance copper | Bright tin |
| 1A4534-06-R | Cartridge brass | Bright tin |

* High performance copper recommended for more than 15 A.

### 5681 and 5682 1/4" fuseclips with mounting holes

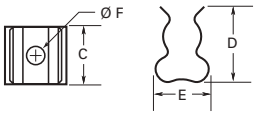

Figure 1

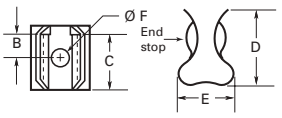

Figure 2

RoHS 2011/65/EU

| Catalog no. | Clip mat. | Finish | Dimensions - in B | C | D | E | Ø F | Ref. |
|---|---|---|---|---|---|---|---|---|
| **Without end stop** | | | | | | | | |
| 5681-01 | BeCu | Silver | † | 0.265 | 0.41 | 0.32 | 0.132 | Fig. 1 |
| **With end stop** | | | | | | | | |
| 5682-01 | BeCu | Silver | 0.108 | 0.262 | 0.41 | 0.32 | 0.132 | Fig. 2 |
| 5682-02 | | | 0.131 | | | | | |
| 5682-11-R | BeCu | Bright tin | 0.106 | | | | | |

† Hole in center of both clip and contact area.

**Data sheet no. 2132**

### 5674 PCB fuseclips with mounting holes for 9/32˝ dia. fuses

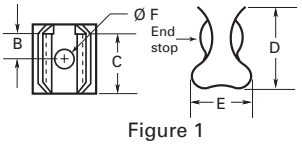

Figure 1

RoHS 2011/65/EU

| Catalog no. | Clip mat. | Finish | Dimensions - in B | C | D | E | Ø F | Ref. |
|---|---|---|---|---|---|---|---|---|
| **With end stop** | | | | | | | | |
| 5674-01 | BeCu | Silver | 0.168 | 0.356 | 0.52 | 0.38 | 0.172 | Fig. 1 |
| 5674-10 | | Bright tin | | | | | | |

**Data sheet no. 2132**

### 5960 PCB fuseclips with mounting holes for 13/32˝ dia. fuses

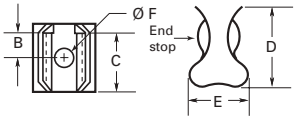

Figure 1

RoHS 2011/65/EU

| Catalog no. | Clip mat. | Finish | Dimensions - in B | C | D | E | Ø F | Ref. |
|---|---|---|---|---|---|---|---|---|
| **With end stop** | | | | | | | | |
| 5960-07 | BeCu | Silver | 0.168 | 0.387 | 0.71 | 0.47 | 0.196 | Fig. 1 |
| 5960-09 | | | 0.2 | | | | 0.172 | |

**Data sheet no. 2132**

### 5592 PCB fuseclips with mounting holes for 9/16˝ dia. fuses

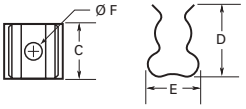

Figure 1

RoHS 2011/65/EU

| Catalog no. | Clip mat. | Finish | Dimensions - in B | C | D | E | Ø F | Ref. |
|---|---|---|---|---|---|---|---|---|
| **Without end stop** | | | | | | | | |
| 5592-01 | BeCu | Silver | 0.252 | 0.56 | 0.875 | 0.6 | 0.2 | Fig. 1 |

**Data sheet no. 2132**

### 1A3400 fuseclips with end stops and straight leads for 13/32˝ dia. fuses

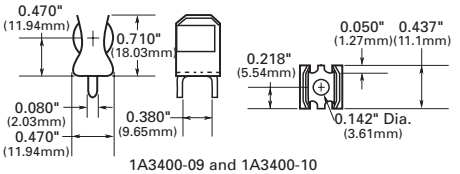

1A3400-09 and 1A3400-10

RoHS 2011/65/EU

| Catalog no. | Clip mat. | Finish | Max amps |
|---|---|---|---|
| 1A3400-09-R | Copper-clad steel | Bright tin | 20 |
| 1A3400-10-R | Copper-clad steel | Silver | 30 |

**Data sheet no. 2131**

Contents


| Fuse type | Volts | Amp range | Catalog symbol/size | Section page |
|---|---|---|---|---|
| **Compact high speed fuses** | | | | |
| **Fuses** | 500 Vac/dc | 50 to 400 | CHSF | 3 |
| **UL Class J full range drive fuse** | | | | |
| **Fuses** | 600 Vac/450 Vdc | 1 to 600 | DFJ | 4 |
| **North American fuses** | | | | |
| **Fuses** | 130 Vac/dc | 1000 to 4000 | FWA | 5 |
| | 150 Vac/dc | 70 to 1000 | FWA | 6 |
| | 250 Vac/dc | 35 to 2500 | FWX | 7 |
| | 500 Vac/dc | 35 to 1600 | FWH | 8 |
| | 600 Vac | 1 to 1000 | KAC | 9 |
| | 600 Vac | 35 to 800 | KBC | 10 |
| | 700 Vac/dc | 5 to 1200 | FWP | 11-12 |
| | 1000 Vac/800 Vdc | 35 to 2000 | FWJ | 13 |
| **Accessories** | Modular fuse blocks | | | 14 |
| **British Standard BS88 fuses** | | | | |
| **Fuses** | 240-250-280 Vac/150 Vdc | 6 to 180 | LCT, LET | 15 |
| | 240-250 Vac/150 Vdc | 160 to 900 | LMT, LMMT | 16 |
| | 690-700 Vac/500 Vdc | 6 to 200 | CT, ET, FE, EET and FEE | 17-18 |
| | 690-700 Vac/350-450-500 Vdc | 160 to 710 | FM, FMM, MT and MMT | 19-20 |
| **Accessories** | Trip indicators, clips and microswitches | | | 21 |


**Continued next page**



## Lead the charge with compact designs

Bussmann series 50-400 amp compact high speed fuses use up to 48% less enclosure space

Contents


| Fuse type | Volts | Amp range | Catalog symbol/size | Section page |
|---|---|---|---|---|
| **Ferrule** | | | | |
| **Fuses** | 150 Vac/dc | 5 to 30 | FWA-_A10F (10x38mm) | 22 |
| | 150 Vac/dc | 35 to 60 | FWA-_A21F (21x51mm) | |
| | 250 Vac/dc | 1 to 50 | FWX (14x51mm) | 23 |
| | 500 Vac | 0.25 to 30 | FWH-_A6F (6x32mm) | 24 |
| | 500 Vac/dc | 1 to 30 | FWH-_14F (14x51mm) | 25 |
| | 600-700 Vac/700 Vdc | 1 to 32 | FWC (10x38mm) | 26 |
| | 690 Vac | 4 to 32 | FWP-_G10F (10x38mm) | 27 |
| | 690-700 Vac/600-700 Vdc | 1 to 50 | FWP-_A14F (14x51mm) | 28 |
| | 690 Vac | 4 to 50 | FWP-_G14F_ (14x51mm) | 29 |
| | 700 Vac/dc | 20 to 100 | FWP-_A22F (22x58mm) | 30 |
| | 690 Vac | 20 to 100 | FWP-_G22F_ (22x58mm) | 31 |
| | 750 Vdc | 5 to 30 | FWK-_A20F (20x127mm) | 32 |
| | 750 Vdc | 35-60 | FWK-_A25F (25x146mm) | |
| | 1000 Vac/800 Vdc | 20 to 30 | FWJ (14x67mm) | 33 |
| | 1200 Vac/1000 Vdc | 20 to 30 | FWL (20x127mm) | 34 |
| | 1400-2000 Vac/1000 Vdc | 2 to 15 | FWS (20x127mm) | 35 |
| **Accessories** | J70032 700 V panel mount block for FWP 14x51mm fuses | | | 36 |
| | JM70100 700 V DIN-Rail/panel mount modular blocks for FWP 22x58mm fuses | | | |
| | CHM modular holders for FWA and FWC 10x38mm fuses | | | |
| | CH14 modular holders for FWX, FWH and FWP 14x51mm fuses | | | 37 |
| | CH22 modular holders for FWP 22x58mm fuses | | | |
| **Square body** | | | | |
| **DIN 43653** | 690-700 Vac/ 700 Vdc | 10 to 400 | 170M — size 000 and 00 | 38-39 |
| | 690-700 Vac | 40 to 2000 | 170M — size 1* to 3 | 40-41 |
| | 1000 Vac | 20 to 315 | 170M — size 00 | 42 |
| | 1000 Vac | 50 to 1400 | 170M — size 1* to 3 | 43-44 |
| | 1250-1300 Vac | 50 to 1400 | 170M — size 1* to 3 | 45-46 |
| **DIN 43620** | 690 Vac | 10 to 800 | 170M — size 00 to 3 | 47-48 |
| | 690-700 Vac | 10 to 1600 | 170M — size 000 to 3 dual indicator | 49-50 |
| | 1000 Vac | 20 to 225 | 170M — size 00 | 51 |
| **French style** | 690-700 Vac | 40 to 1600 | 170M — size 1* to 3 | 52-53 |
| **US style** | 690-700 Vac | 40 to 2000 | 170M — size 1* to 3 | 54-55 |
| | 1000 Vac | 50 to 1400 | 170M — size 1* to 3 | 56-57 |
| | 1250-1300 Vac | 50 to 1400 | 170M — size 1* to 3 | 58-59 |
| **Flush-end contact** | 690 Vac | 25 to 400 | 170M — size 00 | 60 |
| | 690-700 Vac | 40 to 2000 | 170M — size 1* to 3 | 61-62 |
| | 1000 Vac | 50 to 1400 | 170M — size 1* to 3 | 63-64 |
| | 1250-1300 Vac | 50 to 1400 | 170M — size 1* to 3 | 65-66 |
| | 690-700 Vac | 1000 to 4000 | 170M — size 4 | 67-68 |
| | 1000 Vac | 1000 to 3000 | 170M — size 4 | 69 |
| | 1250 Vac | 800 to 2500 | 170M — size 4 | 70 |
| | 660 Vac | 1000 to 4000 | 170M — size 23 | 71-72 |
| | 1250 Vac | 630 to 2800 | 170M — size 23 | 73 |
| | 690 Vac | 2000 to 7500 | 170M — size 24 | 74 |
| | 1000 Vac | 2000 to 5000 | 170M — size 24 | 75 |
| **Accessories** | Fixed center blocks for DIN 43653 fuses | | | 76-77 |
| | Indicators | | | 78 |
| | Microswitches | | | 78 |
| **IGBT fuses** | | | | |
| **Fuses** | 750-800 Vdc | 25 to 630 | 170M — size 000 and 230 | 79-80 |
| | 1000 Vdc | 25 to 500 | 170M — size 000 and 230 | 81-82 |

## CHSF — UL compact high speed fuse

### 500 Vac/dc (UL), 50 to 400 A

Bussmann™ series compact high speed fuses feature space-saving case sizes for protecting semiconductor devices up to 500 Vac/dc in ratings from 50 to 400 amps.

### Ratings

- Volts
  - 500 Vac/dc (UL)
- Amps 50-400 A
- Interrupting rating
  - Max AC – 200 kA
  - Min AC 400%
  - Max DC – 50 kA
  - Min DC 800%

### Operating class aR

### Agency information

- UL Recognized, Guide JFHR2, File E56412
- CSA Component Acceptance, Class 1422-30, File 53787
- IEC aR (self certified)
- RoHS compliant
- CE

### Features

- Requires up to 48% less enclosure space to help reduce the overall assembly size
- Innovative design allows for a significantly smaller package without compromising heat rise performance, preventing extensive equipment redesign
- Global acceptance with UL, CSA, IEC and RoHS for products sold worldwide
- Bolt-on design provides design flexibility for installation in fuse blocks or direct mounting on busbars
- Meets JASO D622 spec for thermal shock, humidity, and vibration
- Superior current cycling performance helps withstand demanding applications

### Recommended fuse blocks
### Up to 100 amps

| Catalog no. | AWG wire size | Stud size |
|---|---|---|
| BH-0111 | 14-2/0 Cu | 1/4-20 |
| BH-0112 | 14-2/0 Cu | 5/16-18 |
| BH-0121 | (2) 14-1/0 Cu | 1/4-20 |
| BH-0122 | (2) 14-1/0 Cu | 5/16-18 |
| 1BS101 | 14-2/0 Cu | 1/4-20 x 1/2 |
| See data sheet no. 1200 (BH-01_) and 1206 (1BS101) for details. | | |

### Up to 400 amps

| Catalog no. | AWG wire size | Stud size |
|---|---|---|
| BH-1131 | 6-250kcmil Cu | 1/4-20 |
| BH-1132 | 6-250kcmil Cu | 5/16-18 |
| 1BS102 | 6-250kcmil Cu | 1/4-20 x 1/2 |
| See data sheet no. 1201 (BH-11_) and 1207 (1BS102) for details. | | |



| Catalog no. | Amps | AC/DC $I^2t$ ($A^2s$) pre-arcing | AC* $I^2t$ ($A^2s$) total clear | DC** $I^2t$ ($A^2s$) total clear | Watts loss / percent of rated current @ 80% | @ 50% |
|---|---|---|---|---|---|---|
| CHSF-50 | 50 | 304 | 1875 | 935 | 3.8 | 1.3 |
| CHSF-60 | 60 | 438 | 2700 | 1346 | 4.5 | 1.5 |
| CHSF-70 | 70 | 596 | 3675 | 1833 | 5.3 | 1.8 |
| CHSF-80 | 80 | 778 | 4800 | 2394 | 6.1 | 2.0 |
| CHSF-100 | 100 | 1216 | 7500 | 3740 | 7.6 | 2.5 |
| CHSF-125 | 125 | 2042 | 12,721 | 6465 | 12.0 | 3.6 |
| CHSF-150 | 150 | 2941 | 18,318 | 9309 | 14.3 | 4.3 |
| CHSF-175 | 175 | 4003 | 24,933 | 12,671 | 16.7 | 5.1 |
| CHSF-200 | 200 | 5228 | 32,566 | 16,550 | 19.1 | 5.8 |
| CHSF-225 | 225 | 6835 | 48,028 | 21,278 | 26.1 | 7.0 |
| CHSF-250 | 250 | 8438 | 59,293 | 26,270 | 29.0 | 7.8 |
| CHSF-300 | 300 | 12,151 | 85, 382 | 37,828 | 34.8 | 9.4 |
| CHSF-350 | 350 | 16,539 | 116,215 | 51,488 | 40.6 | 10.9 |
| CHSF-400 | 400 | 21,603 | 151,791 | 67,250 | 46.4 | 12.5 |

* @ 200 kA/500 Vac.
**@ 50 kA/500 Vdc.

### Dimensions — mm

| Amps | A | B | C | D1 | D2 | E | F | G | H |
|---|---|---|---|---|---|---|---|---|---|
| 50-100 | 81 | 20 | 40 | 61 | 57 | 8.7 | 16 | 7.7 | 3.2 |
| 125-200 | 92 | 25 | 53 | 77 | 68 | 8.7 | 19 | 7.8 | 3.2 |
| 225-400 | 92 | 30 | 53 | 74 | 68 | 8.7 | 25 | 9.0 | 4.8 |

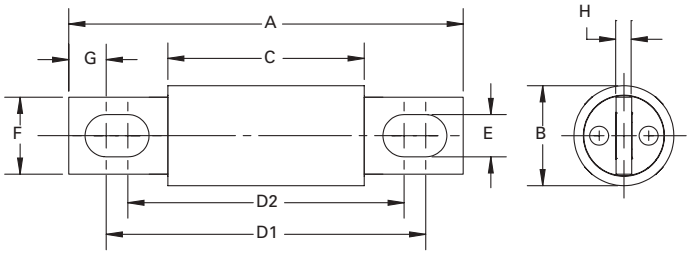


**Data sheet no. 10414**

## DFJ — UL Class J full range high speed fuse

### 600 Vac/450 Vdc (UL), 1 to 600 A

UL Class J high speed, full range current-limiting fuses provide maximum protection for AC and DC drives and controllers. The UL Class J Bussmann series DFJ fuse has the lowest $I^2t$ of any branch circuit fuse to protect power semiconductor devices that utilize diodes, GTOs, SCRs and SSRs. The DFJ fuse combines the performance of high speed fuses in a full range Class J branch circuit package, allowing the use of readily available Class J fuse blocks, holders and switches. The DFJ uses standard Class J holders and blocks. See section 8 for available catalog numbers.

### Ratings

- Volts
  - 600 Vac (UL)
  - 450 Vdc (UL 15-600 A)
- Amps 1-600 A
- IR
  - 200 kA RMS Sym.
  - 100 kA DC

### Operating class gR

### Agency information

- UL Listed, Std 248-8, Class J, Guide JDDZ, File E4273
- CSA Certified, C22-2 No 248.8, Class 1422-02, File 53787
- CE

### Dimensions — in

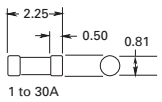

1 to 30A

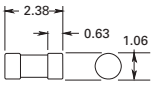

35 to 60A

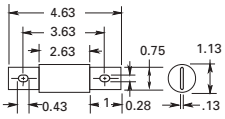

70 to 100A

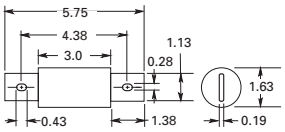

110 to 200A

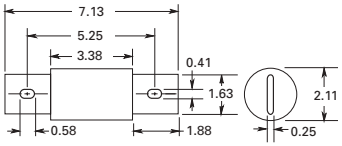

225 to 400A

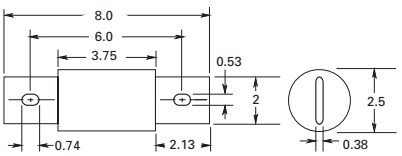

450 to 600A

| Catalog no. | Amps | $I^2t$ ($A^2Sec$) @ 600 Vac/100 kA Pre-arc | Clearing | Watts loss* |
|---|---|---|---|---|
| DFJ-1 | 1 | — | — | — |
| DFJ-2 | 2 | — | — | — |
| DFJ-3 | 3 | — | — | — |
| DFJ-4 | 4 | — | — | — |
| DFJ-5 | 5 | — | — | — |
| DFJ-6 | 6 | — | — | — |
| DFJ-8 | 8 | — | — | — |
| DFJ-10 | 10 | — | — | — |
| DFJ-12 | 12 | — | — | — |
| DFJ-15 | 15 | 4 | 110 | 4.1 |
| DFJ-17.5 | 17.5 | — | — | — |
| DFJ-20 | 20 | 8 | 365 | 4.0 |
| DFJ-25 | 25 | 12 | 610 | 4.9 |
| DFJ-30 | 30 | 20 | 1000 | 5.5 |
| DFJ-35 | 35 | 55 | 1100 | 6.8 |
| DFJ-40 | 40 | 90 | 1900 | 8.6 |
| DFJ-50 | 50 | 140 | 2800 | 8.7 |
| DFJ-60 | 60 | 290 | 6000 | 8.5 |
| DFJ-70 | 70 | 450 | 3100 | 12 |
| DFJ-80 | 80 | 650 | 4600 | 13 |
| DFJ-90 | 90 | 1010 | 7200 | 13 |
| DFJ-100 | 100 | 1460 | 10,500 | 13 |
| DFJ-110 | 110 | 1710 | 9500 | 17 |
| DFJ-125 | 125 | 3580 | 20,000 | 15 |
| DFJ-150 | 150 | 5080 | 28,000 | 19 |
| DFJ-175 | 175 | 6310 | 35,000 | 23 |
| DFJ-200 | 200 | 9850 | 54,500 | 24 |
| DFJ-225 | 225 | 11,420 | 51,000 | 29 |
| DFJ-250 | 250 | 17,000 | 74,500 | 30 |
| DFJ-300 | 300 | 23,500 | 103,000 | 36 |
| DFJ-350 | 350 | 38,800 | 170,000 | 39 |
| DFJ-400 | 400 | 62,200 | 272,000 | 40 |
| DFJ-450 | 450 | 44,600 | 270,000 | 56 |
| DFJ-500 | 500 | 79,500 | 480,000 | 52 |
| DFJ-600 | 600 | 138,000 | 830,000 | 57 |

† Watts loss at rated current.

### Data sheet no. 1048

## FWA — North American

### 130 Vac/dc (UL), 1000 to 4000 A

North American style flush-end high speed fuses for the protection of DC common bus, DC drives, power converters/rectifiers and reduced rated voltage starters.

### Ratings

- Volts 130 Vac/dc
- Amps 1000-4000 A
- IR
  - 200 kA RMS Sym at 130 Vac
  - 50 kA at 130 Vdc

### Agency information

- UL Recognized, JFHR2, E91958 on 1000-2000 A fuses
- CE



| Rated voltage | Rated current (amps) | $I^2t$ ($A^2s$) Pre-arcing | $I^2t$ ($A^2s$) Clearing at 130 Vac | Watts loss (W)† | Catalog no. |
|---|---|---|---|---|---|
| 130 Vac/dc (UL) | 1000 | 170,000 | 460,000 | 60 | FWA-1000AH |
| | 1200 | 270,000 | 730,000 | 70 | FWA-1200AH |
| | 1500 | 520,000 | 1,400,000 | 78 | FWA-1500AH |
| | 2000 | 860,000 | 2,400,000 | 108 | FWA-2000AH |
| | 2500 | 1,500,000 | 4,100,000 | 130 | FWA-2500AH |
| | 3000 | 2,100,000 | 5,700,000 | 150 | FWA-3000AH |
| | 4000 | 3,400,000 | 9,200,000 | 257 | FWA-4000AH |

† Watts loss at rated current.

### Dimensions — in

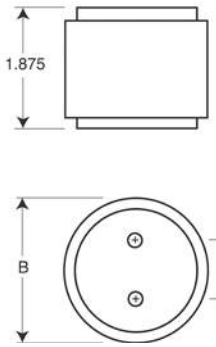


1000-3000 A

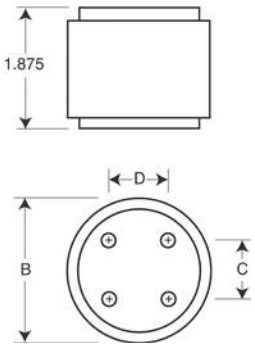


4000 A

| Amp range | B | C | D | Thread / depth |
|---|---|---|---|---|
| 1000 to 2000 | 2.0 | 1.0 | — | 3/8-24 x 1/2″ UNF |
| 2500 to 3000 | 3.0 | 1.5 | — | 1/2-20 x 1/2″ UNF |
| 4000 | 3.5 | 1.5 | 1.5 | 1/2-20 x 1/2″ UNF |

1″ = 25.4mm

For details on electrical characteristics, contact Application Engineering and ask for data sheets: 720001, 5785301

## FWA — North American

### 150 Vac/dc (UL), 70 to 1000 A

North American style bolted tag high speed fuses used for the protection of DC common bus, DC drives, power converters / rectifiers and reduced rated voltage starters.

### Ratings

- Volts
  - 150 Vac/dc (UL)
  - 80 Vdc 1000 A only
- Amps 70-1000 A
- IR
  - 100 kA RMS Sym. (70-400 A)
  - 200 kA RMS Sym. (450-1000 A)
  - 20 kA at 150 Vdc (70-800 A)
  - 100 kA at 80 Vdc (70-1000 A)

### Agency information

- UL Recognized JFHR2, E91958
- CE

| Rated voltage | Rated current (amps) | $I^2t$ ($A^2s$) Pre-arcing | $I^2t$ ($A^2s$) Clearing at 150 Vac | Watts loss (W)† | Catalog no. |
|---|---|---|---|---|---|
| 150 Vac/dc (UL) | 70 | 470 | 4000 | 6.9 | FWA-70B |
| | 80 | 670 | 6000 | 7.7 | FWA-80B |
| | 100 | 1200 | 12,000 | 9.0 | FWA-100B |
| | 125 | 1870 | 18,000 | 11.2 | FWA-125B |
| | 150 | 2700 | 26,000 | 13.5 | FWA-150B |
| | 200 | 4780 | 45,000 | 17.6 | FWA-200B |
| | 250 | 7470 | 70,000 | 22.5 | FWA-250B |
| | 300 | 10,760 | 100,000 | 27.0 | FWA-300B |
| | 350 | 15,700 | 140,000 | 30.6 | FWA-350B |
| | 400 | 20,300 | 180,000 | 35.2 | FWA-400B |
| | 500 | 39,000 | 120,000 | 35.0 | FWA-500A |
| | 600 | 46,000 | 140,000 | 47.0 | FWA-600A |
| | 700 | 75,000 | 220,000 | 49.0 | FWA-700A |
| | 800 | 92,000 | 280,000 | 58.0 | FWA-800A |
| 80 Vdc | 1000 | 170,000 | 510,000 | 60.0 | FWA-1000A |

† Watts loss at rated current.

### Dimensions — mm

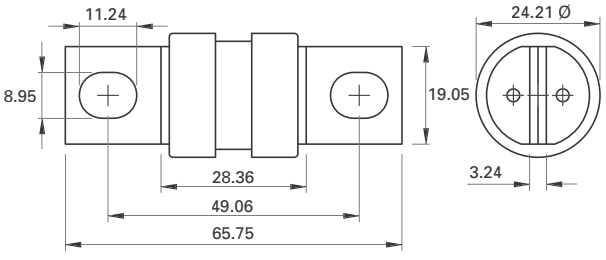


**70-400 A**

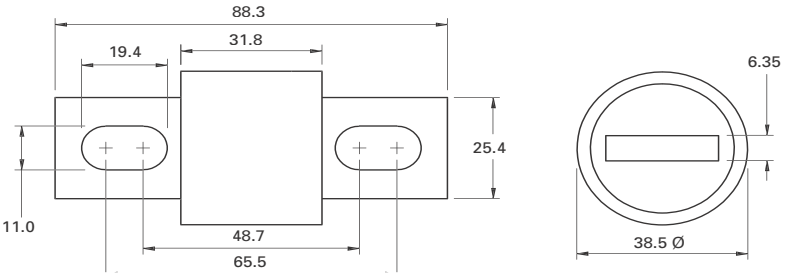


**500-1000 A**

For details on electrical characteristics, contact Application Engineering and ask for data sheets: 720002, 5785310

## FWX — North American

### 250 Vac/dc (UL), 35 to 2500 A

North American style bolted tags and flush-end high speed fuses for the protection of DC common bus, DC drives, power converters/ rectifiers and reduced rated voltage starters.

### Ratings

- Volts 250 Vac/dc (UL)
- Amps 35-2500 A
- IR
  - 200 kA RMS Sym.
  - 20 kA at 250 Vdc (35-800 A)

### Agency information

- UL Recognized, JFHR2, E56412
- CSA Class 1422-30, (53787) on 35-800 A fuses (20 kA IR at 250 Vdc)
- CE

### Dimensions — in

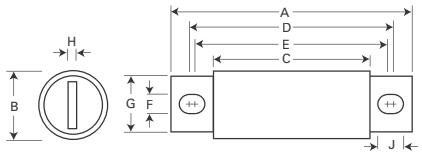


35-800 A

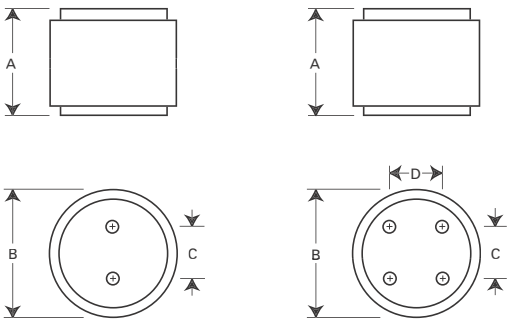


1000-1200 A

1500-2500 A

| Amp range | A | B | C | D | E | F | G | H | J | Thread / depth |
|---|---|---|---|---|---|---|---|---|---|---|
| 35-60 | 3.19 | 0.81 | 1.59 | 2.59 | 2.25 | 0.34 | 0.63 | 0.13 | 0.52 | — |
| 70-200 | 3.13 | 1.22 | 1.59 | 2.44 | 2.19 | 0.34 | 1.00 | 0.19 | 0.47 | — |
| 225-600 | 3.84 | 1.50 | 1.59 | 2.94 | 2.25 | 0.41 | 1.00 | 0.25 | 0.75 | — |
| 700-800 | 3.84 | 2.00 | 1.59 | 3.03 | 2.28 | 0.41 | 1.50 | 0.25 | 0.78 | — |
| 1000-1200 | 2.59 | 3.00 | 1.50 | — | — | — | — | — | — | 3/8-24 x 1/2" UNF |
| 1500-2500 | 2.59 | 3.50 | 1.50 | 1.50 | — | — | — | — | — | |

1" = 25.4mm

| Rated voltage | Rated current (amps) | I²t (A²s) Pre-arcing | I²t (A²s) Clearing at 250 Vac | Watts loss (W)† | Catalog no. |
|---|---|---|---|---|---|
| 250 Vac/dc (UL) | 35 | 50 | 230 | 4.2 | FWX-35A |
| | 40 | 60 | 310 | 5.2 | FWX-40A |
| | 45 | 80 | 390 | 5.7 | FWX-45A |
| | 50 | 100 | 520 | 6.0 | FWX-50A |
| | 60 | 140 | 740 | 8.1 | FWX-60A |
| | 70 | 330 | 1400 | 7.2 | FWX-70A |
| | 80 | 430 | 1850 | 8.1 | FWX-80A |
| | 90 | 570 | 2450 | 9.0 | FWX-90A |
| | 100 | 740 | 3150 | 10.0 | FWX-100A |
| | 125 | 1130 | 4850 | 12.5 | FWX-125A |
| | 150 | 1620 | 6950 | 15.7 | FWX-150A |
| | 175 | 2170 | 9300 | 18.5 | FWX-175A |
| | 200 | 2790 | 12,000 | 22.0 | FWX-200A |
| | 225 | 3210 | 14,700 | 24.0 | FWX-225A |
| | 250 | 3960 | 18,100 | 27.0 | FWX-250A |
| | 275 | 4720 | 21,600 | 31.0 | FWX-275A |
| | 300 | 6000 | 27,300 | 32.0 | FWX-300A |
| | 350 | 10,600 | 48,600 | 39.0 | FWX-350A |
| | 400 | 14,500 | 66,100 | 44.0 | FWX-400A |
| | 450 | 22,100 | 101,000 | 49.0 | FWX-450A |
| | 500 | 28,000 | 128,000 | 54.0 | FWX-500A |
| | 600 | 41,100 | 188,000 | 62.0 | FWX-600A |
| | 700 | 48,800 | 190,000 | 72.0 | FWX-700A |
| | 800 | 59,000 | 230,000 | 84.0 | FWX-800A |
| | 1000 | 44,000 | 360,000 | 100.0 | FWX-1000AH |
| | 1200 | 92,000 | 750,000 | 103.0 | FWX-1200AH |
| | 1500 | 120,000 | 880,000 | 140.0 | FWX-1500AH |
| | 1600 | 160,000 | 1,200,000 | 140.0 | FWX-1600AH |
| | 2000 | 320,000 | 2,300,000 | 151.0 | FWX-2000AH |
| | 2500 | 670,000 | 4,700,000 | 163.0 | FWX-2500AH |

† Watts loss at rated current.



For details on electrical characteristics, contact Application Engineering and ask for data sheets:720005, 359 (35-800 A), 5785299 (100-2500 A)

## FWH — North American

### 500 Vac/dc (UL), 35 to 1600 A

North American style bolted tags high speed fuses, for the protection of DC common bus, power converters/rectifiers and reduced rated voltage starters.

### Ratings

- Volts
  - 500 Vac (UL)
  - 500 Vdc (35-800 A only)
- Amps 35-1600 A
- IR
  - 200 kA RMS Sym.
  - 50 kA at 500 Vdc

### Agency information

- UL Recognized, JFHR2, E91958, FWH-_B (35-200 A) and FWH-_A (1000 and 1200 A), JFHR2, E56412 FWH-_A (225-800 A)
- CSA Class 1422-30, File 53787 (35-1600 A)
- CE

### Dimensions — in

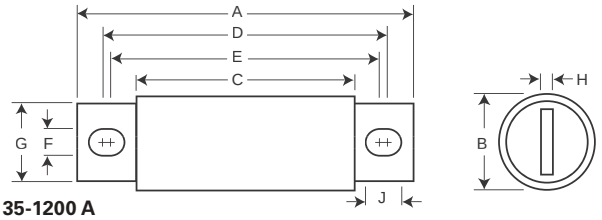


35-1200 A

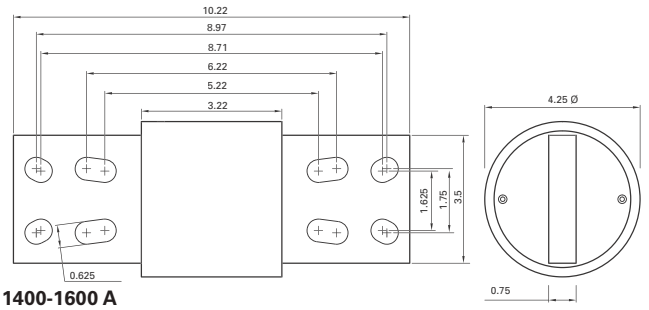


1400-1600 A

| Amp range | A | B | C | D | E | F | G | H | J |
|---|---|---|---|---|---|---|---|---|---|
| 35-60 | 3.19 | 0.81 | 1.59 | 2.54 | 2.19 | 0.34 | 0.72 | 0.13 | 0.52 |
| 70-100 | 3.62 | 0.95 | 1.74 | 2.85 | 2.81 | 0.35 | 0.75 | 0.13 | 0.38 |
| 125-200 | 3.62 | 1.16 | 1.84 | 2.89 | 2.77 | 0.34 | 1.00 | 0.19 | 0.41 |
| 225-400 | 4.34 | 1.50 | 2.09 | 3.44 | 2.75 | 0.41 | 1.00 | 0.25 | 0.75 |
| 450-600 | 4.34 | 2.00 | 2.09 | 3.53 | 2.78 | 0.41 | 1.50 | 0.25 | 0.78 |
| 700-800 | 6.34 | 2.50 | 2.09 | 4.97 | 3.44 | 0.53 | 2.00 | 0.38 | 1.30 |
| 1000-1200 | 6.97 | 3.00 | 3.22 | 5.47 | 4.48 | 0.62 | 2.38 | 0.44 | 1.12 |
| 1400-1600 | Refer to drawing | | | | | | | | |

1″ = 25.4mm

| Rated voltage | Rated current (amps) | I²t (A²s) Pre-arcing | I²t (A²s) Clearing at 250 Vac | Watts loss (W)† | Catalog no. |
|---|---|---|---|---|---|
| 500 Vac/dc (UL) | 35 | 34 | 150 | 8.0 | FWH-35B |
| | 40 | 76 | 320 | 7.5 | FWH-40B |
| | 45 | 105 | 450 | 7.5 | FWH-45B |
| | 50 | 135 | 670 | 7.5 | FWH-50B |
| | 60 | 210 | 900 | 9.9 | FWH-60B |
| | 70 | 210 | 900 | 10.6 | FWH-70B |
| | 80 | 305 | 1400 | 12.7 | FWH-80B |
| | 90 | 360 | 1600 | 15.0 | FWH-90B |
| | 100 | 475 | 2000 | 17.0 | FWH-100B |
| | 125 | 800 | 3500 | 25.0 | FWH-125B |
| | 150 | 1100 | 4600 | 30.0 | FWH-150B |
| | 175 | 1450 | 6200 | 35.0 | FWH-175B |
| | 200 | 1900 | 8500 | 40.0 | FWH-200B |
| 500 Vac/dc (UL) | 225 | 4600 | 23,300 | 39.0 | FWH-225A |
| | 250 | 6300 | 32,200 | 41.0 | FWH-250A |
| | 275 | 7900 | 40,300 | 46.0 | FWH-275A |
| | 300 | 9800 | 49,800 | 51.0 | FWH-300A |
| | 325 | 13,700 | 63,800 | 53.0 | FWH-325A |
| | 350 | 14,500 | 72,900 | 58.0 | FWH-350A |
| | 400 | 19,200 | 96,700 | 65.0 | FWH-400A |
| | 450 | 24,700 | 127,000 | 74.0 | FWH-450A |
| | 500 | 29,200 | 149,000 | 84.0 | FWH-500A |
| | 600 | 41,300 | 206,000 | 108.0 | FWH-600A |
| | 700 | 55,000 | 298,000 | 120.0 | FWH-700A |
| | 800 | 76,200 | 409,000 | 129.0 | FWH-800A |
| 500 Vac (UL) | 1000 | 92,000 | 450,000 | 145.0 | FWH-1000A |
| | 1200 | 122,000 | 600,000 | 180.0 | FWH-1200A |
| | 1400 | 200,000 | 1,000,000 | 210.0 | FWH-1400A |
| | 1600 | 290,000 | 1,400,000 | 230.0 | FWH-1600A |

† Watts loss at rated current.

For details on electrical characteristics, contact Application Engineering and ask for data sheets: 720007, 360 (225-800 A), 5785304 (35-200 A, 1000-1600 A)

## KAC — North American

### 600 Vac (UL), 1 to 1000 A

North American style bolted tags high speed fuses. These fuses are supplied as replacements only. For new installations, Eaton recommends the 700 V FWP. See page 4-11.

### Ratings

- Volts 600 Vac
- Amps 1-1000 A
- IR 200 kA RMS Sym.

### Agency information

- UL Recognized, JFHR2, E56413 (1-600 A only)
- CE

| Rated voltage | Rated current (amps) | Catalog no. |
|---|---|---|
| | 1 | KAC-1 |
| | 2 | KAC-2 |
| | 3 | KAC-3 |
| | 4 | KAC-4 |
| | 5 | KAC-5 |
| | 6 | KAC-6 |
| | 7 | KAC-7 |
| | 8 | KAC-8 |
| | 9 | KAC-9 |
| | 10 | KAC-10 |
| | 12 | KAC-12 |
| | 15 | KAC-15 |
| | 17.5 | KAC-17.5 |
| | 20 | KAC-20 |
| | 25 | KAC-25 |
| | 30 | KAC-30 |
| | 35 | KAC-35 |
| | 40 | KAC-40 |
| | 45 | KAC-45 |
| | 50 | KAC-50 |
| 600 Vac (UL) | 60 | KAC-60 |
| | 70 | KAC-70 |
| | 80 | KAC-80 |
| | 90 | KAC-90 |
| | 100 | KAC-100 |
| | 110 | KAC-110 |
| | 125 | KAC-125 |
| | 150 | KAC-150 |
| | 175 | KAC-175 |
| | 200 | KAC-200 |
| | 225 | KAC-225 |
| | 250 | KAC-250 |
| | 300 | KAC-300 |
| | 350 | KAC-350 |
| | 400 | KAC-400 |
| | 450 | KAC-450 |
| | 500 | KAC-500 |
| | 600 | KAC-600 |
| | 700 | KAC-700 |
| | 800 | KAC-800 |
| | 1000 | KAC-1000 |

### Dimensions — in

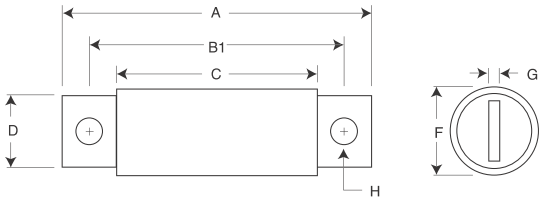


**1-30 A and 450-1000 A**

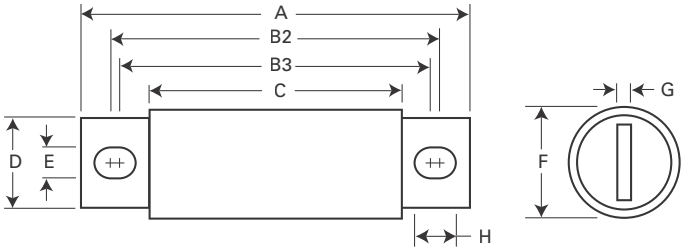


**35-400 A**

| Amp range | A | B1 | B2 | B3 | C | D | E | F | G | H |
|---|---|---|---|---|---|---|---|---|---|---|
| 1-30 | 2.88 | 2.50 | — | — | 1.88 | 0.41 | — | 0.56 | 0.06 | 0.26 |
| 35-60 | 4.38 | — | 3.75 | 3.50 | 2.75 | 0.63 | 0.34 | 0.81 | 0.09 | 0.47 |
| 70-100 | 5.00 | — | 4.06 | 3.66 | 2.75 | 0.75 | 0.41 | 1.00 | 0.13 | 0.61 |
| 110-200 | 5.14 | — | 4.39 | 3.77 | 2.91 | 1.00 | 0.41 | 1.50 | 0.19 | 0.72 |
| 225-400 | 6.18 | — | 4.82 | 4.57 | 3.00 | 1.63 | 0.56 | 2.00 | 0.25 | 0.69 |
| 450-800 | 6.25 | 4.75 | — | | 3.06 | 2.00 | — | 2.50 | 0.25 | 0.56 |
| 1000 | 7.25 | 4.75 | — | | 3.06 | 2.75 | — | 3.50 | 0.38 | 0.56 |

1 ″ = 25.4mm



**Data sheet no. 720009**

## KBC — North American

### 600 Vac (UL), 35 to 800 A

North American style bolted tags and flush-end high speed fuses. These fuses are supplied as replacements only. For new installations, Eaton recommends the 700 V FWP fuses. See page 4-11.

### Ratings

- Volts 600 Vac (UL)
- Amps 35-800 A
- IR 200 kA RMS Sym.

### Agency information

- UL Recognized, JFHR2, E56412 (35-600 A only)
- CE

| Rated voltage | Rated current (amps) | Catalog no. |
|---|---|---|
| | 35 | KBC-35 |
| | 40 | KBC-40 |
| | 45 | KBC-45 |
| | 50 | KBC-50 |
| | 60 | KBC-60 |
| | 70 | KBC-70 |
| | 80 | KBC-80 |
| | 90 | KBC-90 |
| | 100 | KBC-100 |
| | 110 | KBC-110 |
| | 125 | KBC-125 |
| 600 Vac (UL) | 150 | KBC-150 |
| | 175 | KBC-175 |
| | 200 | KBC-200 |
| | 225 | KBC-225 |
| | 250 | KBC-250 |
| | 300 | KBC-300 |
| | 350 | KBC-350 |
| | 400 | KBC-400 |
| | 450 | KBC-450 |
| | 500 | KBC-500 |
| | 600 | KBC-600 |
| | 800 | KBC-800 |

### Dimensions — in

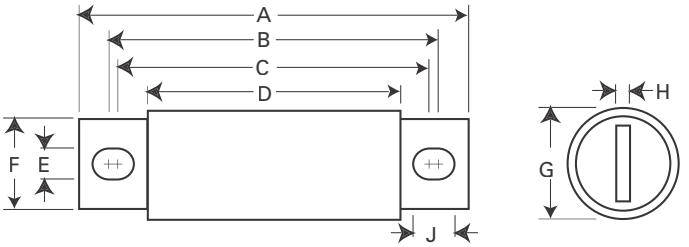


35-60 and 110-600 A

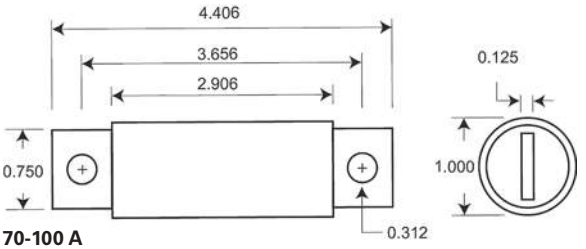


70-100 A

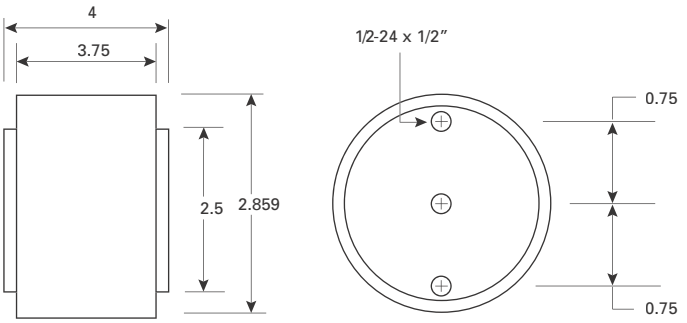


800 A

| Rated current (amps) | A | B | C | D | E | F | G | H | J |
|---|---|---|---|---|---|---|---|---|---|
| 35-60 | 4.38 | 3.75 | 3.50 | 2.75 | 0.34 | 0.63 | 0.81 | 0.09 | 0.47 |
| 70-100 | Refer to drawing | | | | | | | | |
| 110-200 | 4.41 | 3.72 | 3.59 | 2.91 | 0.31 | 0.88 | 1.22 | 0.19 | 0.38 |
| 225-400 | 5.13 | 4.19 | 3.56 | 2.91 | 0.41 | 1.00 | 1.50 | 0.25 | 0.72 |
| 450-600 | 5.13 | 4.39 | 3.69 | 2.88 | 0.41 | 1.50 | 2.00 | 0.25 | 0.76 |
| 800 | Refer to drawing | | | | | | | | |

1" = 25.4mm

**Data sheet no. 720010**

## FWP — North American

### 700 Vac/dc (UL), 5 to 1200 A

North American style bolted tags high speed fuses for the protection of DC common bus, DC drives, power converters/rectifiers, reduced rated voltage starters.

### Ratings

- Volts 700 Vac/dc (UL)
- Amps 5-1200 A
- IR
  - 200 kA RMS Sym.
  - 50 kA at 700 Vdc (Type A)
  - 50 kA at 500 Vdc (Type B)

### Agency information

- UL Recognized, JFHR2, E91958 FWP-_B (5-100 A, 700-1200 A), JFHR2, E56412 FWP-_A (125-600 A)
- CSA Class 1422-30, (53787) on 5-800 A
- CE



| Rated voltage | Rated current (amps) | I²t (A²s) Pre-arcing | I²t (A²s) Clearing at 700 Vac | Watts loss (W)† | Catalog no. |
|---|---|---|---|---|---|
| | 5 | 1.6 | 11 | 1.5 | FWP-5B |
| | 10 | 3.6 | 22 | 4.0 | FWP-10B |
| | 15 | 10.0 | 70 | 5.5 | FWP-15B |
| | 20 | 26.0 | 180 | 6.0 | FWP-20B |
| | 25 | 44.0 | 320 | 7.0 | FWP-25B |
| | 30 | 58.0 | 450 | 9.0 | FWP-30B |
| | 35 | 34.0 | 160 | 12.0 | FWP-35B |
| | 40 | 76.0 | 320 | 12.0 | FWP-40B |
| | 50 | 135.0 | 600 | 12.0 | FWP-50B |
| | 60 | 210.0 | 950 | 15.5 | FWP-60B |
| | 70 | 305.0 | 2000 | 18.0 | FWP-70B |
| | 80 | 360.0 | 2400 | 21.0 | FWP-80B |
| | 90 | 415.0 | 2700 | 25.0 | FWP-90B |
| | 100 | 540.0 | 3500 | 27.0 | FWP-100B |
| | 125 | 1800.0 | 7300 | 28.0 | FWP-125A |
| 700 Vac/dc (UL) | 150 | 2900.0 | 11,700 | 32.0 | FWP-150A |
| | 175 | 4200.0 | 16,700 | 35.0 | FWP-175A |
| | 200 | 5500.0 | 22,000 | 43.0 | FWP-200A |
| | 225 | 7700.0 | 31,300 | 45.0 | FWP-225A |
| | 250 | 10,500.0 | 42,500 | 48.0 | FWP-250A |
| | 300 | 17,600.0 | 71,200 | 58.0 | FWP-300A |
| | 350 | 23,700.0 | 95,600 | 65.0 | FWP-350A |
| | 400 | 31,000.0 | 125,000 | 78.0 | FWP-400A |
| | 450 | 36,400.0 | 137,000 | 94.0 | FWP-450A |
| | 500 | 45,200.0 | 170,000 | 107.0 | FWP-500A |
| | 600 | 66,700.0 | 250,000 | 122.0 | FWP-600A |
| | 700 | 54,000.0 | 300,000 | 125.0 | FWP-700A |
| | 800 | 78,000.0 | 450,000 | 140.0 | FWP-800A |
| | 900 | 91,500.0 | 530,000 | 150.0 | FWP-900A |
| | 1000 | 120,000.0 | 600,000 | 170.0 | FWP-1000A |
| | 1200 | 195,000.0 | 1,100,000 | 190.0 | FWP-1200A |

† Watts loss at rated current.

For details on electrical characteristics, contact Application Engineering and ask for data sheets: 720012, 5785316 (5-30 A), 361 (125-600 A), 5785308 (35-100 A, 700-1200 A)

## FWP — North American

**700 Vac/dc (UL), 5 to 1200 A**

### Dimensions — in

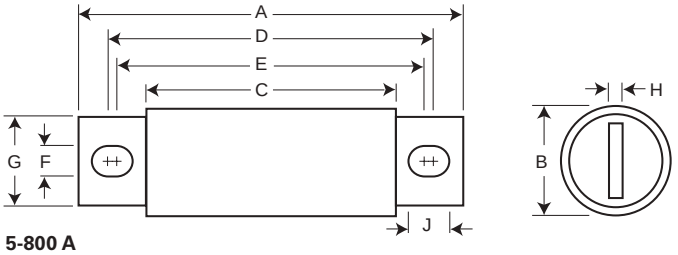


**5-800 A**

| Amp range | A | B | C | D | E | F | G | H | J |
|---|---|---|---|---|---|---|---|---|---|
| 5-30 | 2.87 | 0.56 | 1.86 | 2.48 | 2.48 | 0.25 | 0.41 | 0.06 | 0.25 |
| 35-60 | 4.38 | 0.81 | 2.75 | 3.71 | 3.31 | 0.34 | 0.73 | 0.13 | 0.54 |
| 70-100 | 4.41 | 0.95 | 2.59 | 3.63 | 3.56 | 0.34 | 0.75 | 0.13 | 0.38 |
| 125-200 | 5.09 | 1.50 | 2.84 | 4.19 | 3.5 | 0.41 | 1.00 | 0.25 | 0.75 |
| 225-400 | 5.09 | 2.00 | 2.84 | 4.28 | 3.53 | 0.41 | 1.50 | 0.25 | 0.78 |
| 450-600 | 7.09 | 2.50 | 2.84 | 5.72 | 4.19 | 0.53 | 2.00 | 0.38 | 1.30 |
| 700-800 | 6.63 | 2.00 | 2.76 | 5.56 | 5.06 | 0.63 | 1.50 | 0.25 | 0.88 |
| 900-1000 | Refer to drawing | | | | | | | | |
| 1200 | | | | | | | | | |

1″ = 25.4mm

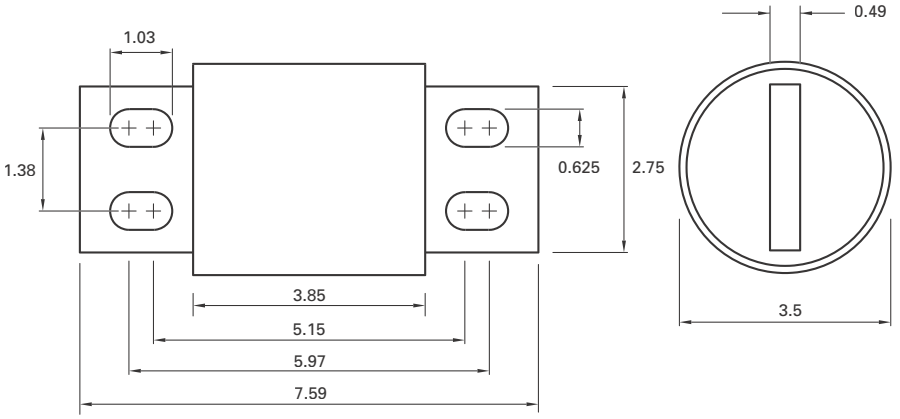


**900-1000 A -mm**

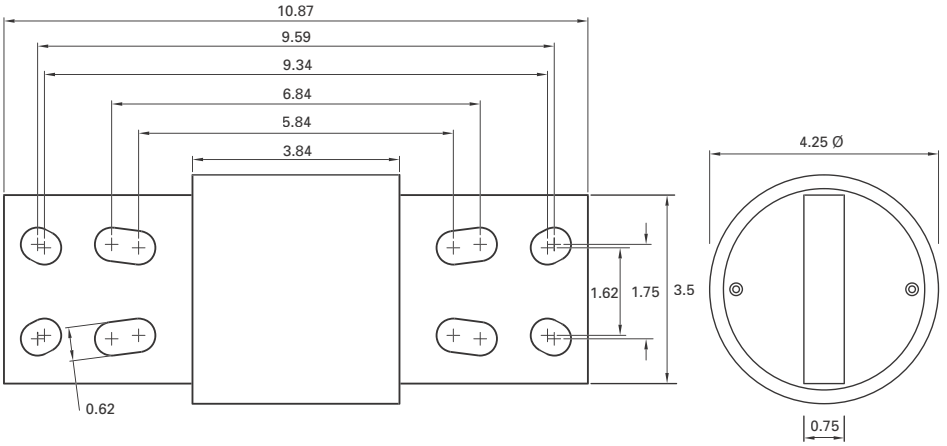


**1200 A -mm**

For details on electrical characteristics, contact Application Engineering and ask for data sheets: 720012, 5785316 (5-30 A), 361 (125-600 A), 5785308 (35-100 A, 700-1200 A)

## FWJ — North American

### 1000 Vac /800 Vdc (UL), 35 to 2000 A

North American style bolted tags high speed fuses for the protection of DC common bus, DC drives power converters/rectifiers, reduced rated voltage starters and high voltage traction inverters.

### Ratings

- Volts
  - 1000 Vac
  - 800 Vdc
- Amps 35-2000 A
- IR
  - 25 kA RMS Sym. (35-200 A)
  - 100 kA RMS Sym. (250-2000 A)
  - 50 kA at 800 Vdc (35-200 A and 450-600 A)

### Agency information

- UL Recognized, JFHR8, E91958 on 50-600 A only
- CE



| Rated voltage | Rated current (amps) | I²t (A²s) Pre-arcing | I²t (A²s) Clearing at 1000 Vac | Watts loss (W)† | Catalog no. |
|---|---|---|---|---|---|
| 1000 Vac/ 800 Vdc (UL) | 35 | 210 | 2000 | 7 | FWJ-35A |
| | 40 | 300 | 2500 | 8 | FWJ-40A |
| | 50 | 470 | 3500 | 10 | FWJ-50A |
| | 60 | 670 | 5000 | 11 | FWJ-60A |
| | 70 | 1100 | 6900 | 12 | FWJ-70A |
| | 80 | 1550 | 9700 | 13 | FWJ-80A |
| | 90 | 1900 | 12,000 | 14 | FWJ-90A |
| | 100 | 2800 | 17,500 | 15 | FWJ-100A |
| | 125 | 4800 | 35,000 | 16 | FWJ-125A |
| | 150 | 6300 | 45,000 | 25 | FWJ-150A |
| | 175 | 7500 | 65,000 | 30 | FWJ-175A |
| | 200 | 11,700 | 80,000 | 32 | FWJ-200A |
| | 250 | 16,000 | 112,000 | 50 | FWJ-250A |
| | 300 | 23,500 | 164,000 | 56 | FWJ-300A |
| | 350 | 33,000 | 231,000 | 62 | FWJ-350A |
| | 400 | 47,000 | 330,000 | 67 | FWJ-400A |
| | 500 | 39,500 | 329,000 | 95 | FWJ-500A |
| | 600 | 61,000 | 520,000 | 105 | FWJ-600A |
| | 800 | 87,000 | 500,000 | 182 | FWJ-800A |
| | 1000 | 190,000 | 1,100,000 | 206 | FWJ-1000A |
| | 1200 | 370,000 | 2,100,000 | 240 | FWJ-1200A |
| | 1400 | 470,000 | 2,700,000 | 248 | FWJ-1400A |
| | 1600 | 700,000 | 4,000,000 | 267 | FWJ-1600A |
| | 1800 | 925,000 | 5,300,000 | 239 | FWJ-1800A |
| | 2000 | 1,330,000 | 7,600,000 | 244 | FWJ-2000A |

† Watts loss at rated current.

### Dimensions — in

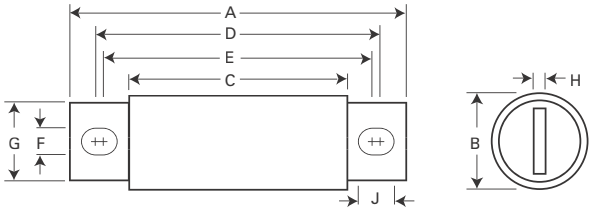


| Amp range | A | B | C | D | E | F | G | H | J |
|---|---|---|---|---|---|---|---|---|---|
| 35-60 | 5.00 | 0.94 | 3.11 | 4.24 | 4.18 | 0.35 | 0.75 | 0.13 | 0.38 |
| 70-100 | 4.93 | 1.13 | 3.09 | 4.27 | 4.16 | 0.35 | 1.00 | 0.19 | 0.41 |
| 125-200 | 5.69 | 1.53 | 3.26 | 4.80 | 4.06 | 0.45 | 1.00 | 0.25 | 0.82 |
| 250-400 | 5.77 | 2.00 | 3.50 | 4.81 | 4.15 | 0.43 | 1.50 | 0.25 | 0.76 |
| 500-600 | 7.20 | 2.50 | 3.47 | 5.98 | 4.71 | 0.56 | 2.00 | 0.38 | 1.20 |
| 800-2000 | 6.81 | 3.50 | 3.31 | 5.47 | 4.96 | 0.63 | 2.75 | 0.50 | 0.88 |

1″ = 25.4mm

For details on electrical characteristics, contact Application Engineering and ask for data sheets: 720027, 5785303 (35-600 A), 5785309 (800-2000 A),

## North American Accessories

### Modular fuse blocks

Bussmann series line of fuse blocks provides the user with design and manufacturing flexibility. Two identical half blocks make up a modular assembly that can be panel mounted any distance apart to accommodate any length fuse.

### C5268 stud type

The simpler design is the C5268 modular fuse block. With this design, the fuse terminal and cable (with termination) are mounted on the same stud, minimizing installation labor. The stud type block is available in the configurations shown in the table below.

| Catalog no. | Max fuse amp rating | Stud |
|---|---|---|
| C5268-1 | 200 | 5/16-18 x 1" |
| C5268-2 | 200 | 5/16-18 x 1-3/4" |
| C5268-3 | 200 | 5/16-18 x 3/4" |
| C5268-4 | 100 | 1/4-20 x 1" |
| C5268-5 | 100 | 1/4-20 x 1-3/4" |

### 1BS10x connector type

Bussmann series 1BS10 blocks utilize a tin-plated connector for wire termination and heat dissipation), and a plated-steel stud for fuse mounting. The connector type block is available in the configurations shown below. Consult your Bussmann series product representative for additional product details.

| Catalog no. | Max rated voltage | Max fuse amp rating |
|---|---|---|
| 1BS101 | 600 | 100 |
| 1BS102 | 600 | 400 |
| 1BS103 | 600 | 400 |
| 1BS104 | 600 | 600 |

### BH modular type

BH modular blocks provide a wide range of mounting configurations for Bussmann series high speed semiconductors fuses. BH fuse blocks have a short-circuit current rating up to 200 kA RMS Sym.

| Catalog no. | Max rated voltage | Max fuse amp rating |
|---|---|---|
| BH-0 | 700 | 100 |
| BH-1 | 2500 | 400 |
| BH-2 | 5000 | 600 |
| BH-3 | 1250 | 700 |

Data sheets: 1200 (BH-0), 1201 (BH-1), 1202 (BH-2), 1203 (BH-3), 1206 (1BS101), 1207 (1BS102), 1208 (1BS103), 1209 (1BS104)

## LCT, LET BS88

### 240 Vac/150 Vdc (IEC), 250-280 Vac/150 Vdc (UL), 6 to 180 A

BS88 style bolted tag high speed fuses for the protection of DC common bus, DC drives, power converters/rectifiers and reduced rated voltage starters. Low watts loss in a compact size.

### Ratings

- Volts
  - LCT 240 Vac/150 Vdc (IEC), 250 Vac/150 Vdc (UL)
  - LET 280 Vac/150 Vdc (UL, 25-160 A), 250 Vac/150 Vdc (UL 180 A)
- Amps 6-180 A
- IR
  - 200 kA RMS Sym.
  - 50 kA DC at 125 Vdc
  - 100 kA at 80 Vdc (70-1000 A)

### Operating class aR.

### Agency information

- Designed and tested to BS88 Part 4 and IEC 60269 Part 4
- UL Recognized*
- CCC (LCT only)
- CE

* All fuses have been tested at 318 Vac. Consult Bussmann series product representative for UL Recognized status.

**Dimensions — mm**

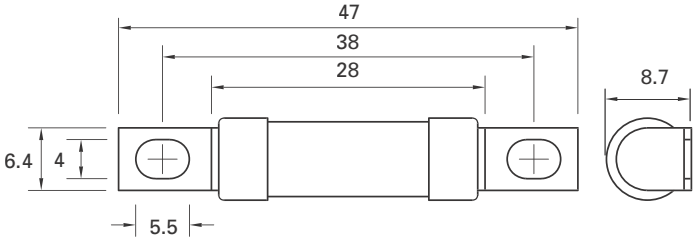


**LCT**

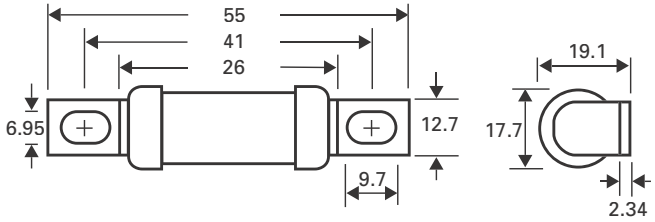


Indicator (optional)

**LET — indicator optional**

| Fuse symbol | Rated voltage | Rated current(amps) | I²t (A²s) Pre-arcing | I²t (A²s) Clearing at 240 Vac | Watts loss (W)† | Catalog no. |
|---|---|---|---|---|---|---|
| LCT | 240 Vac/150 Vdc (IEC) 250 Vac/150 Vdc (UL) | 6 | 2.0 | 9 | 1.0 | 6LCT |
| | | 10 | 3.8 | 22 | 2.5 | 10LCT |
| | | 12 | 7.0 | 32 | 2.5 | 12LCT |
| | | 16 | 20.0 | 100 | 2.5 | 16LCT |
| | | 20 | 25.0 | 160 | 4.0 | 20LCT |
| LET | 280 Vac/150 Vdc (UL) | 25 | 18.0 | 250 | 4.0 | 25LET |
| | | 32 | 32.0 | 450 | 5.0 | 32LET |
| | | 35 | 50.0 | 600 | 5.0 | 35LET |
| | | 50 | 100.0 | 1400 | 7.0 | 50LET |
| | | 63 | 180.0 | 2200 | 9.0 | 63LET |
| | | 80 | 300.0 | 3800 | 10.0 | 80LET |
| | | 100 | 600.0 | 7500 | 10.0 | 100LET |
| | | 125 | 600.0 | 7500 | 16.0 | 125LET |
| | | 160 | 1100.0 | 16,000 | 20.0 | 160LET |
| | 250 Vac/150 Vdc (UL) | 180 | 1600.0 | 29,000 | 21.0 | 180LET |

† Watts loss at rated current.
Note: 7LET, 10LET, 12LET and 16LET are available for replacement purposes on existing equipment.

For details on electrical characteristics, contact Application Engineering and ask for data sheets: 720004, 5785296 (LCT), 5785293 (LET)

## LMT, LMMT BS88

### 240 Vac/150 Vdc (IEC), 250 Vac/150 Vdc (UL), 160 to 900 A

BS88 style bolted tags high speed fuses for the protection of DC common bus, DC drives, power converters/rectifiers and reduced rated voltage starters. Low watts loss in a compact size.

### Ratings

- Volts
  - 240 Vac/150 Vdc (IEC)
  - 250 Vac/150 Vdc (UL)
- Amps 160-900 A
- IR
  - 200 kA RMS Sym., 40 kA at 150 Vdc (IEC)
  - 200 kA RMS Sym., 50 kA at 150 Vdc (UL)

### Operating class aR

### Agency information

- Designed and tested to BS88 Part 4 and IEC 60269 Part 4
- UL Recognized*
- CCC
- CE

* All fuses have been tested at 318 Vac. Consult Bussmann series product representative for UL Recognized status.

| Fuse symbol | Rated voltage | Rated current (amps) | I²t (A²s) Pre-arcing | I²t (A²s) Clearing at 120 Vac | I²t (A²s) Clearing at 240 Vac | Watts loss (W)† | Catalog no. |
|---|---|---|---|---|---|---|---|
| LMT | 240 Vac /150 Vdc (IEC) 250 Vac /150 Vdc (UL) | 160 | 1100 | 7000 | 16,000 | 17 | 160LMT |
| | | 200 | 1500 | 10,000 | 20,000 | 28 | 200LMT |
| | | 250 | 3200 | 20,000 | 40,000 | 28 | 250LMT |
| | | 315 | 6000 | 35,000 | 75,000 | 35 | 315LMT |
| | | 355 | 8000 | 50,000 | 100,000 | 35 | 355LMT |
| | | 400 | 14,000 | 70,000 | 160,000 | 40 | 400LMT |
| | | 450 | 18,000 | 100,000 | 220,000 | 42 | 450LMT |
| LMMT | 240 Vac /150 Vdc (IEC) 250 Vac /150 Vdc (UL) | 400 | 6000 | 35,000 | 80,000 | 60 | 400LMMT |
| | | 500 | 14,000 | 80,000 | 170,000 | 64 | 500LMMT |
| | | 630 | 24,000 | 150,000 | 300,000 | 75 | 630LMMT |
| | | 710 | 32,000 | 200,000 | 460,000 | 77 | 710LMMT |
| | | 800 | 52,000 | 300,000 | 600,000 | 82 | 800LMMT |
| | | 900 | 75,000 | 400,000 | 800,000 | 97 | 900LMMT |

† Watts loss at rated current.

### Dimensions — mm

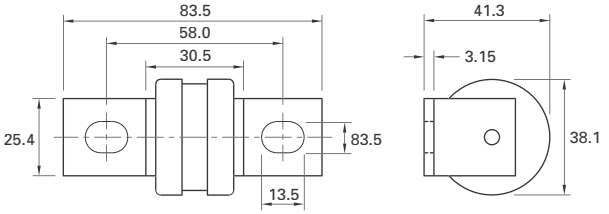


**LMT — indicator optional**

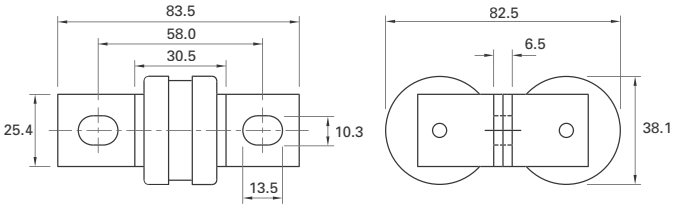


**LMMT — indicator optional**

For details on electrical characteristics, contact Application Engineering and ask for data sheets: 720004, 5785294 (LMT), 5785295 (LMMT)

# CT, ET, FE, EET, FEE BS88

## 690 Vac/500 Vdc (IEC), 700 Vac/500 Vdc (UL), 6 to 200 A

BS88 style bolted tags high speed fuses for the protection of DC common bus, DC drives, power converters /rectifiers and reduced rated voltage starters.

### Ratings

- Volts
  - 690 Vac/500 Vdc (IEC)
  - 700 Vac/500 Vdc (UL)
- Amps 6-200 A
- IR
  - CT: IEC — 90 kA RMS Sym., 40 kA at 500 Vdc, UL — 200 kA RMS Sym., 50 kA at 500 Vdc
  - ET, EET, FE and FEE: 200 kA RMS Sym.,50 kA at 500 Vdc

### Operating class aR

### Agency information

- Designed and tested to BS88 part 4 and IEC 60269 Part 4
- UL Recognized*
- CCC for ET, FE, EET, FEE
- CE

* Consult your Bussmann series product representative for UL Recognized status.

### Dimensions — mm

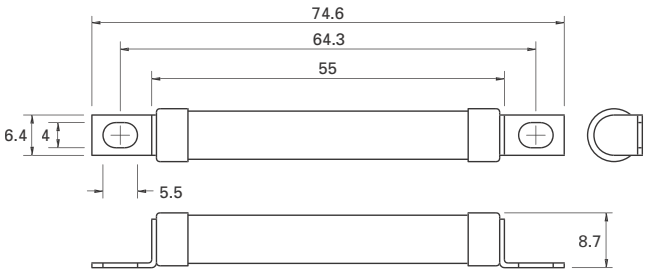


**CT**

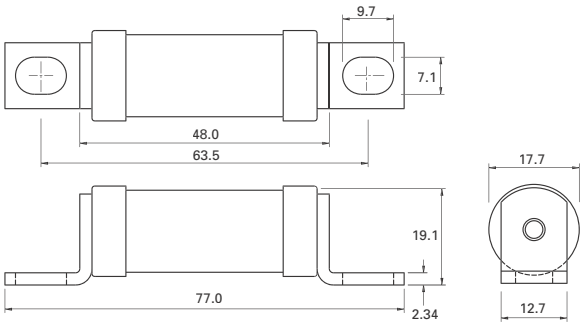


**ET, FE — indicator optional**

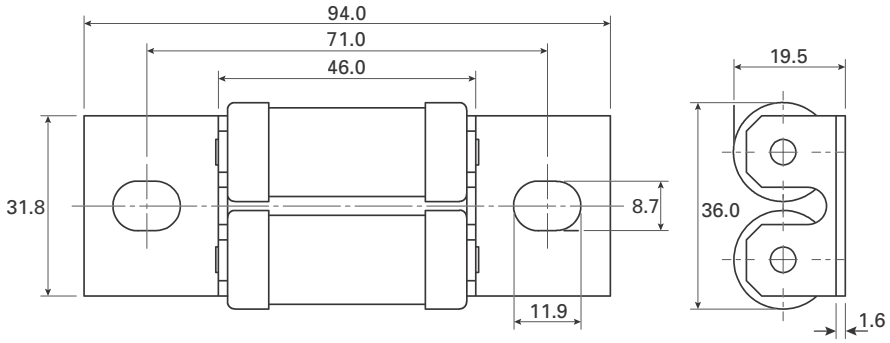


**EET, FEE — indicator optional**

For details on electrical characteristics, contact Application Engineering and ask for data sheets: 5785312 (CT, ET), 5785314 (FE), 5785313 (EET), 5785292 (FEE)

## CT, ET, FE, EET, FEE BS88

### 690 Vac/500 Vdc (IEC), 700 Vac/500 Vdc (UL), 6 to 200 A

| Fuse symbol | Rated voltage | Rated current (amps) | I²t (A²s) Pre-arcing | I²t (A²s) Clearing at 415 Vac | I²t (A²s) Clearing at 660 Vac | Watts loss (W)† | Catalog no. |
|---|---|---|---|---|---|---|---|
| CT | 690 Vac/500 Vdc (IEC) 700 Vac/500 Vdc (UL) | 6 | 1.8 | 8.5 | 12 | 2 | 6CT |
| | | 10 | 7.0 | 30.0 | 48 | 3 | 10CT |
| | | 12 | 10.0 | 40.0 | 65 | 3 | 12CT |
| | | 16 | 16.0 | 66.0 | 110 | 7 | 16CT |
| | | 20 | 32.0 | 150.0 | 220 | 7 | 20CT |
| ET | 690 Vac/500 Vdc (IEC) 700 Vac/500 Vdc (UL) | 25 | 25.0 | 150.0 | 250 | 7 | 25ET |
| | | 32 | 32.0 | 190.0 | 350 | 11 | 32ET |
| | | 35 | 52.0 | 310.0 | 500 | 11 | 35ET |
| | | 40 | 103.0 | 600.0 | 900 | 9 | 40ET |
| | | 45 | 103.0 | 680.0 | 1100 | 11 | 45ET |
| | | 56 | 135.0 | 950.0 | 1500 | 14 | 56ET |
| | | 63 | 171.0 | 1200.0 | 2000 | 16 | 63ET |
| | | 80 | 360.0 | 2500.0 | 4000 | 18 | 80ET |
| FE | 690 Vac/500 Vdc (IEC) 700 Vac/500 Vdc (UL) | 35 | 33.0 | 130.0 | 200 | 9 | 35FE |
| | | 40 | 52.0 | 180.0 | 300 | 9 | 40FE |
| | | 45 | 76.0 | 270.0 | 450 | 11 | 45FE |
| | | 50 | 103.0 | 380.0 | 600 | 11 | 50FE |
| | | 63 | 135.0 | 480.0 | 750 | 12 | 63FE |
| | | 71 | 210.0 | 600.0 | 950 | 17 | 71FE |
| | | 80 | 250.0 | 900.0 | 1500 | 20 | 80FE |
| | | 90 | 360.0 | 1300.0 | 2100 | 20 | 90FE |
| | | 100 | 470.0 | 1800.0 | 2800 | 23 | 100FE |
| EET | 690 Vac/500 Vdc (IEC) 700 Vac/500 Vdc (UL) | 90 | 490.0 | 300.0 | 4500 | 19 | 90EET |
| | | 110 | 600.0 | 4000.0 | 6500 | 27 | 110EET |
| | | 140 | 1050.0 | 7000.0 | 12,000 | 35 | 140EET |
| | | 160 | 1500.0 | 10,000.0 | 17,000 | 39 | 160EET |
| FEE | 690 Vac/500 Vdc (IEC) 700 Vac/500 Vdc (UL) | 100 | 400.0 | 1600.0 | 2400 | 24 | 100FEE |
| | | 120 | 540.0 | 1900.0 | 3100 | 32 | 120FEE |
| | | 140 | 850.0 | 2500.0 | 3800 | 36 | 140FEE |
| | | 160 | 1000.0 | 3700.0 | 5700 | 46 | 160FEE |
| | | 180 | 1400.0 | 5300.0 | 8400 | 46 | 180FEE |
| | | 200 | 1900.0 | 7100.0 | 11,400 | 52 | 200FEE |

† Watts loss at rated current.

**Note:** FC, 8ET, 12ET, 15ET, 20ET, 65EET and 75EET are available for replacement purposes on existing equipment.

For details on electrical characteristics, contact Application Engineering and ask for data sheets: 5785312 (CT, ET), 5785314 (FE), 5785313 (EET), 5785292 (FEE)

# FM, FMM, MT, MMT BS88

**690 Vac/350-450 Vdc (IEC),700 Vac/500 Vdc (UL), 160 to 710 A**

BS88 style bolted tags high speed fuses for the protection of DC common bus, DC drives, power converters /rectifiers and reduced rated voltage starters.

## Ratings

- Volts
  - FM: 690 Vac/450 Vdc (IEC); 700 Vac/500 Vdc (UL)
  - FMM: 690 Vac/450 Vdc (IEC); 700 Vac (UL)
  - MT and MMT: 690 Vac/350 Vdc (IEC); 700 Vac (UL)
- Amps 160-710 A
- IR
  - FM: 200 kA RMS Sym. (IEC/UL), 40 kA at 450 Vdc (IEC), 50 kA at 500 Vdc (UL)
  - FMM: 200 kA RMS Sym. (IEC/UL), 40 kA at 450 Vdc (IEC).
  - MT and MMT: 200 kA RMS Sym. (IEC/UL), 40 kA at 350 Vdc (IEC).

## Operating class aR

## Agency information

- Designed and tested to BS88 Part 4 and IEC 60269 Part 4
- UL Recognized MT and MMT 350 Vdc (IEC) rating*
- CCC for FM and FMM
- CE

Consult your Bussmann series product representative for UL Recognized status.

## Dimensions — mm

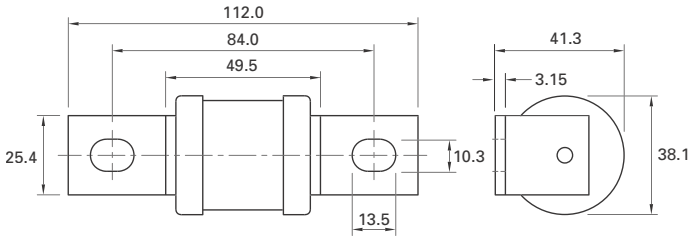


**FM, MT — indicator optional**

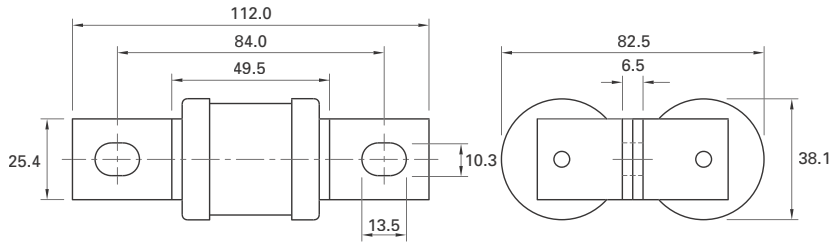


**FMM, MMT — indicator optional**

For details on electrical characteristics, contact Application Engineering and ask for data sheets: 5785314 (FM), 5785313 (MT), 5785292 (FMM), 5785311 (MMT)

## FM, FMM, MT, MMT BS88

### 690 Vac/350-450 Vdc (IEC), 700 Vac/500 Vdc (UL), 160 to 710 A

| Fuse symbol | Rated voltage | Rated current (amps) | I²t (A²s) Pre-arcing | I²t (A²s) Clearing at 415 Vac | I²t (A²s) Clearing at 660 Vac | Watts loss (W)† | Catalog no. |
|---|---|---|---|---|---|---|---|
| FM | 690 Vac/450 Vdc (IEC) 700 Vac/500 Vdc (UL) | 180 | 1400 | 7500 | 13,500 | 40 | 180FM |
| | | 200 | 2600 | 10,500 | 18,500 | 40 | 200FM |
| | | 225 | 3700 | 14,500 | 26,500 | 44 | 225FM |
| | | 250 | 5200 | 20,500 | 37,500 | 48 | 250FM |
| | | 280 | 7000 | 30,500 | 55,000 | 48 | 280FM |
| | | 315 | 10,000 | 40,000 | 77,000 | 55 | 315FM |
| | | 350 | 15,000 | 60,000 | 105,000 | 55 | 350FM |
| FMM | 690 Vac/450 Vdc (IEC) 700 Vac (UL) | 400 | 10,000 | 40,000 | 72,500 | 85 | 400FMM |
| | | 450 | 15,000 | 60,000 | 105,000 | 90 | 450FMM |
| | | 500 | 20,000 | 82,000 | 150,000 | 100 | 500FMM |
| | | 550 | 30,000 | 120,000 | 215,000 | 100 | 550FMM |
| | | 630 | 45,000 | 180,000 | 310,000 | 100 | 630FMM |
| | | 700 | 60,000 | 245,000 | 420,000 | 120 | 700FMM |
| MT | 690 Vac/350 Vdc (IEC) 700 Vac (UL) | 160 | 2400 | 15,000 | 25,000 | 26 | 160MT |
| | | 180 | 3800 | 25,000 | 38,000 | 26 | 180MT |
| | | 200 | 6000 | 40,000 | 58,000 | 27 | 200MT |
| | | 250 | 11,500 | 80,000 | 110,000 | 32 | 250MT |
| | | 280 | 16,500 | 100,000 | 150,000 | 35 | 280MT |
| | | 315 | 19,000 | 125,000 | 180,000 | 42 | 315MT |
| | | 355 | 22,000 | 160,000 | 200,000 | 51 | 355MT |
| MMT | 690 Vac/350 Vdc (IEC) 700 Vac (UL) | 180 | 1650 | 12,000 | 18,000 | 42 | 180MMT |
| | | 200 | 2200 | 16,000 | 23,000 | 42 | 200MMT |
| | | 225 | 3700 | 26,000 | 40,000 | 42 | 225MMT |
| | | 280 | 6600 | 47,000 | 70,000 | 47 | 280MMT |
| | | 315 | 8600 | 62,000 | 91,000 | 51 | 315MMT |
| | | 355 | 13,500 | 97,000 | 140,000 | 54 | 355MMT |
| | | 400 | 21,000 | 150,000 | 220,000 | 60 | 400MMT |
| | | 450 | 30,000 | 220,000 | 320,000 | 57 | 450MMT |
| | | 500 | 42,000 | 300,000 | 450,000 | 64 | 500MMT |
| | | 560 | 60,000 | 430,000 | 640,000 | 64 | 560MMT |
| | | 630 | 68,500 | 500,000 | 720,000 | 86 | 630MMT |
| | | 710 | 78,000 | 600,000 | 850,000 | 105 | 710MMT |

† Watts loss at rated current.

For details on electrical characteristics, contact Application Engineering and ask for data sheets: 5785314 (FM), 5785313 (MT), 5785292 (FMM), 5785311 (MMT)

# BS 88 Accessories

## Trip indicator

Trip-indicator fuses are available for use in parallel with the main BS88-4 fuses. They can either be attached to the associated fuse or mounted separately in panel mounted fuse clips. Push-on adapters with microswitch (catalog numbers MAI and MBI) are available for use with the trip indicator to provide a means for remote indication.

Fuse ratings of 20 A and below cannot usually accommodate a trip fuse in parallel.

When a trip-indicator is to be attached to the main fuse, an accessory pack comprising a pair of mounting clips and an appropriate trip indicator is required. The clips are snapped onto the fuse and the indicator is pressed into clips as shown below.

### Trip indicator kit catalog numbers (indicator + clips)

| For fuse symbol | Catalog no. |
|---|---|
| ET | EC-600 |
| EET | EC-600 |
| FE | EC-600 |
| FEE | EC-600 |
| LET | EC-250 |
| FM | MC-600 |
| FMM | MC-600 |
| LMT | MC-250 |
| LMMT | MC-250 |

### Indicator only

| Catalog no. | Rated current | Dim. 'A' (mm) |
|---|---|---|
| TI250 | 250 | 37.6 |
| TI500 | 500 | 47.5 |
| TI600 | 600 | 55.7 |
| TI700 | 700 | 61.8 |
| TI1100 | 1100 | 98.4 |
| TI1500 | 1500 | 120.8 |
| TI2000 | 2000 | 147.5 |
| TI2500 | 2500 | 198.3 |

### Indicator dimensions — mm

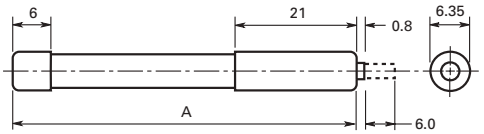


## Indicator panel mount clips

CL1 panel mount fuse clips are available for mounting a trip-indicator directly to a PCB or insulated panel, or when mounting directly on the fuse is impractical. Order catalog number CL1.

### CL1 dimensions — mm

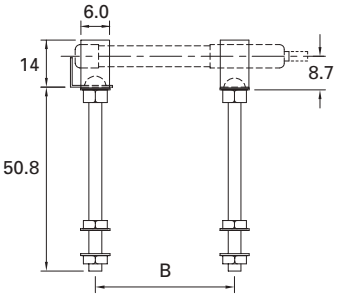


## Microswitches

### Microswitch/adapter: MAI and MBI

To provide a means of remote indication with the trip indicators, we offer two microswitch/adapters. The microswitches are provided with double pole, single throw contacts, having both a normally open (NO) and a normally closed (NC) position. A special material is used in the construction of the adapter to provide reliable operation in the temperatures ranges associated with standard operating conditions and during fuse operation.

| Catalog no. | Description | Terminal orientation |
|---|---|---|
| MAI | Trip indicator adapter and microswitch | Back |
| MBI | Trip indicator adapter and microswitch | Side |

| Microswitch ratings (MAI and MBI) | |
|---|---|
| **Terminals** | **Quick connect** |
| **Current rating** | |
| AC 50/60 Hz resistive load | 4 A @ 250 V RMS |
| | 6 A @ 127 V RMS |
| DC, resistive load | 0.7 A @ 110 Vdc |
| | 2 A @ 30 Vdc |
| **Maximum working voltage** | |
| Contact-to-contact (RMS) | 1000 V |
| | 1500 V |
| Maximum DC volts | 110 Vdc |

### Microswitch/adapter dimensions — mm

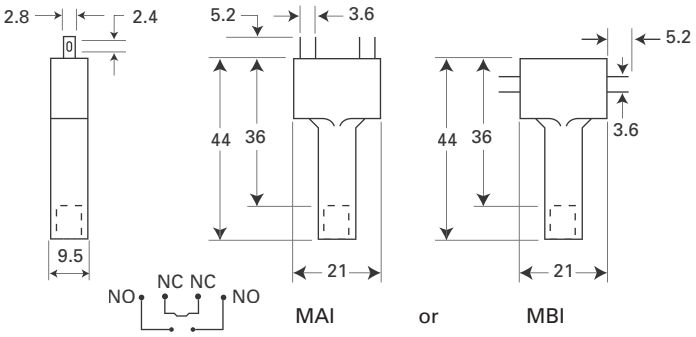

## FWA Ferrule

### 150 Vac/dc (UL), 10x38mm and 21x51mm, 5 to 60 A

Ferrule style high speed fuses for the protection of DC common bus, DC drives, power converters /rectifiers and reduced rated voltage starters.

### Ratings

- Volts 150 Vac/dc (UL)
- Amps 5-60 A
- IR
  - 200 kA RMS Sym.
  - 50 kA DC at 150 Vdc

### Operating class aR

### Agency information

- UL Recognized, JFHR2, E91958
- CE

| Fuse size | Rated voltage | Rated current (amps) | I²t (A²s) Pre-arcing | I²t (A²s) Clearing at 150 Vac | Watts loss (W)† | Catalog no. |
|---|---|---|---|---|---|---|
| 10x38mm (13/32"x1-1/2") | 150 Vac/dc (UL) | 5 | 1.6 | 8 | 2.0 | FWA-5A10F |
| | | 10 | 3.6 | 16 | 2.7 | FWA-10A10F |
| | | 15 | 14.0 | 50 | 3.3 | FWA-15A10F |
| | | 20 | 33.0 | 130 | 3.8 | FWA-20A10F |
| | | 25 | 58.0 | 220 | 4.9 | FWA-25A10F |
| | | 30 | 100.0 | 400 | 4.9 | FWA-30A10F |
| 21x51mm (13/16"x2") | | 35 | 75.0 | 800 | 4.5 | FWA-35A21F |
| | | 40 | 100.0 | 1000 | 5.1 | FWA-40A21F |
| | | 45 | 130.0 | 1300 | 6.0 | FWA-45A21F |
| | | 50 | 170.0 | 1600 | 7.3 | FWA-50A21F |
| | | 60 | 250.0 | 2400 | 8.0 | FWA-60A21F |

† Watts loss at rated current.

### Dimensions — in (mm)

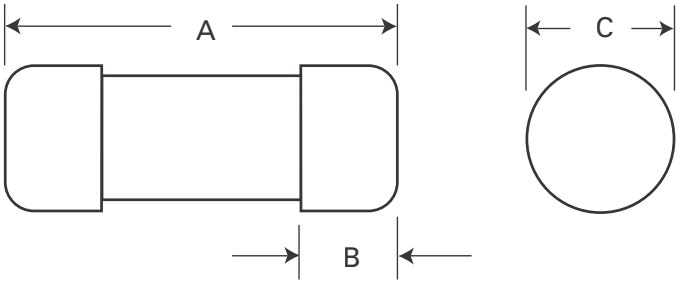


| Amp range | A | B | C |
|---|---|---|---|
| 5-30 | 1.5 (38.1) | 0.38 (9.5) | 0.41 (10.3) |
| 35-60 | 2.0 (50.8) | 0.63 (15.9) | 0.81 (20.6) |

For details on electrical characteristics, contact Application Engineering and ask for data sheets: 720003,5785317 (5-30 A), 5785305 (35-60 A)

## FWX Ferrule

### 250 Vac/dc (UL), 14x51mm, 1 to 50 A

Ferrule style high speed fuses for the protection of DC common bus, DC drives, power converters/rectifiers rated voltage starters.

### Ratings

- Volts
  - 250 Vac (UL, all ratings)
  - 250 Vdc (UL, 5-50 A only)
- Amps 1-50 A
- IR
  - 200 kA RMS Sym. (UL, all ratings)
  - 50 kA at 250 Vdc (UL, 5-50 A only)

### Operating class aR

### Agency information

- UL Recognized, JFHR2, E91958 1-50 A
- CSA Class 1422-30, 1422-90 (53787) 5-30 A
- CE



| Fuse size | Rated voltage | Rated current(amps) | I²t (A²s) Pre-arcing | I²t (A²s) Clearing at 250 Vac | Watts loss (W)† | Catalog no. |
|---|---|---|---|---|---|---|
| 14x51mm (9/16"x2") | 250 Vac (UL) | 1 | 0.03 | 0.40 | 5.7 | FWX-1A14F |
| | | 2 | 0.08 | 0.10 | 8.6 | FWX-2A14F |
| | | 3 | 0.11 | 0.26 | 2.8 | FWX-3A14F |
| | | 4 | 0.1 | 0.23 | 3.0 | FWX-4A14F |
| | 250 Vac/dc (UL) | 5 | 1.6 | 13.00 | 1.3 | FWX-5A14F |
| | | 10 | 3.6 | 24.00 | 3.4 | FWX-10A14F |
| | | 15 | 14.0 | 83.00 | 3.8 | FWX-15A14F |
| | | 20 | 33.0 | 200.00 | 4.6 | FWX-20A14F |
| | | 25 | 58.0 | 300.00 | 5.3 | FWX-25A14F |
| | | 30 | 100.0 | 500.00 | 5.9 | FWX-30A14F |
| | | 50 | 200.0 | 1800.00 | 5.7 | FWX-50A14F |

† Watts loss at rated current.

### Dimensions — mm (in)

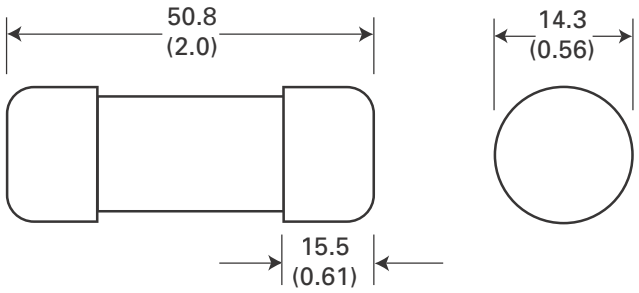


For details on electrical characteristics, contact Application Engineering and ask for data sheets: 720006, 5785302

## FWH Ferrule

### 500 Vac (UL), 6x32mm, 0.25 to 30 A

Ferrule style high speed fuses for the protection of DC common bus, DC drives, power converters/rectifiers and reduced rated voltage starters.

### Ratings

- Volts
  - 500 Vac (UL — 0.25-1 A and 3.15-30 A)
  - 1000 Vac (UL — 2 A)
  - 600 Vdc (UL — 1-5 A)
- Amps 0.25-30 A
- IR
  - 50 kA AC (0.25-1 A and 3.15-20 A)
  - 30 kA AC (2 A)
  - 20 kA AC (25-30 A)[1]
  - 50 kA DC (1-5 A))

[1] Tested at PF = 76%.

### Dimensions — mm (in)

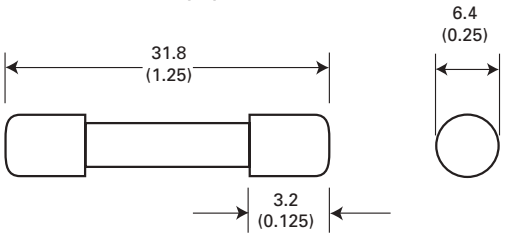


### Operating class aR

### Agency information

- UL Recognized, JFHR2, E91958 (0.25-7 A) and JDYX2, E19180 (10-30 A)
- CSA Component Acceptance Class 1422-30, 1422-90 (53787) 0.25-7 A
- RoHS compliant
- CE

### Opening times

| Amp range | 150% | 200% | 300% | Min IR |
|---|---|---|---|---|
| 0.25-7 | >30 min | >30 min | ≤ 10 sec | 300 % |
| 10-30 | | | | 200 % |

| | Rated voltage | | I²t (A²s) | | | Catalog no. | |
|---|---|---|---|---|---|---|---|
| Amps | Vac | Vdc | Pre-arcing | Clearing @ 500Vac | Watts loss (W)† | Standard | RoHS compliant |
| 0.25 | 500 | — | 0.01 | 0.05 | 2.7 | — | FWH-.250A6F |
| 0.5 | | | 0.05 | 0.25 | 1.2 | | FWH-.500A6F |
| 1 | 1000 | 600 | 0.4 | 2 | 1.7 | | FWH-001A6F |
| 2 | | | 1.3 | 3.5 | 3.2 | | FWH-002A6F |
| 3.15 | 500 | | 3.1 | 7.7 | 2.9 | | FWH-3.15A6F |
| 4 | | | — | — | — | | FWH-004A6F |
| 5 | | | 15 | 40 | 2.1 | | FWH-005A6F |
| 6.3 | | — | 36 | 90 | 2.3 | | FWH-6.30A6F |
| 7 | | | 50 | 125 | 2.5 | | FWH-007A6F |
| 10 | | | 9.9 | 139 | 2.86 | FWH5-010A6F | FWH5-010A6FR |
| 12.5 | | | 20 | 60 | 3.53 | FWH5-12-5A6F | FWH5-12-5A6FR |
| 15 | | | 44 | 146 | 3.08 | FWH5-015A6F | FWH5-015A6FR |
| 16 | | | 48 | 177 | 4.48 | FWH5-016A6F | FWH5-016A6FR |
| 20 | | | 75 | 259 | 4.26 | FWH5-020A6F | FWH5-020A6FR |
| 25 | | | 126 | 345 | — | FWH-025A6F | FWH-025A6FR |
| 30 | | | 145 | 430 | — | FWH-030A6F | FWH-030A6FR |

† Watts loss at rated current.

**Data sheet no.720038**

## FWH Ferrule

### 500 Vac/ Vdc (UL), 14x51mm, 1 to 30 A

Ferrule style high speed fuses for the protection of DC common bus, DC drives, power converters/rectifiers and reduced rated voltage starters.

### Ratings

- Volts
  - 500 Vac (UL, all ratings)
  - 500 Vdc (UL, 5-30 A only)
- Amps 1-30 A
- IR
  - 200 kA RMS Sym. all ratings
  - 50 kA at 500 Vdc 5-30 A only

### Operating class aR

### Agency information

- UL Recognized 1-30 A
- CSA Class 1422-30, (53787) 5-30 A
- CE



| Fuse size | Rated voltage | Rated current (amps) | I²t (A²s) Pre-arcing | I²t (A²s) Clearing at 500 Vac | Watts loss (W)† | Catalog no. |
|---|---|---|---|---|---|---|
| 14x51mm (9/16"x2") | 500 Vac (UL) | 1 | 0.04 | 0.2 | 5.7 | FWH-1A14F |
| | | 2 | 0.08 | 0.1 | 8.7 | FWH-2A14F |
| | | 3 | 0.11 | 0.2 | 2.8 | FWH-3A14F |
| | | 4 | 0.10 | 0.2 | 3.0 | FWH-4A14F |
| | 500 Vac/dc (UL) | 5 | 2.00 | 7.0 | 1.5 | FWH-5A14F |
| | | 6 | 2.00 | 7.0 | 1.5 | FWH-6A14F |
| | | 10 | 4.00 | 15.0 | 4.0 | FWH-10A14F |
| | | 12 | 7.00 | 25.0 | 4.3 | FWH-12A14F |
| | | 15 | 10.00 | 40.0 | 5.5 | FWH-15A14F |
| | | 20 | 26.00 | 100.0 | 6.5 | FWH-20A14F |
| | | 25 | 49.00 | 200.0 | 7.0 | FWH-25A14F |
| | | 30 | 58.00 | 240.0 | 9.0 | FWH-30A14F |

† Watts loss at rated current.

### Dimensions — mm (in)

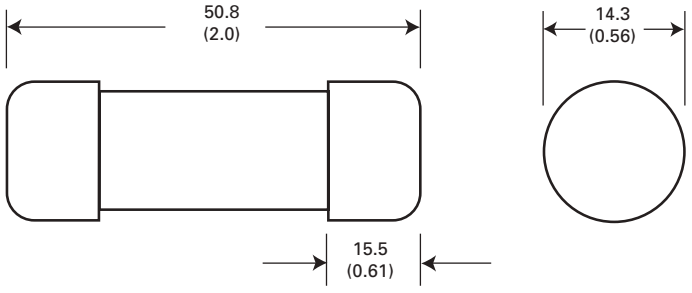


For details on electrical characteristics, contact Application Engineering and ask for data sheets:720008, 5785298

## FWC Ferrule

### 600-700 Vac/700 Vdc (UL), 10x38mm, 1 to 32 A

Ferrule style high speed fuses for the protection of DC common bus, DC drives, power converters/rectifiers and reduced rated voltage starters.

### Ratings

- Volts
  - 700 Vac/dc (UL, 1-4 A)
  - 600 Vac (UL, 6-32 A), 700 Vdc (UL, 6-25 A)
- Amps 1-32 A
- IR
  - 200 kA RMS Sym. at 600 Vac (6-32 A)
  - 200 kA RMS Sym. at 700 Vac (1-4 A)
  - 10 kA DC at 700 Vdc (1-25 A)

### Operating class aR

### Agency information

- UL Recognized, JFHR8, E91958 6-32 A
- CSA Class 1422-30, (53787) 6-32 A
- CE

| Fuse size | Rated voltage | Rated current (amps) | $I^2t$ ($A^2s$) Pre-arcing | $I^2t$ ($A^2s$) Clearing at 600 Vac | Watts loss (W)† | Catalog no. |
|---|---|---|---|---|---|---|
| 10x38mm (13/32"x1-1/2") | 700 Vac/dc (UL) | 1 | 0.2 | 1.2 | 0.5 | FWC-1A10F |
| | | 2 | 0.5 | 3.0 | 1.2 | FWC-2A10F |
| | | 3 | 1.6 | 11.0 | 1.5 | FWC-3A10F |
| | | 4 | 5.2 | 32.0 | 1.5 | FWC-4A10F |
| | 600 Vac/700 Vdc (UL) | 6 | 4.0 | 30.0 | 1.5 | FWC-6A10F |
| | | 8 | 6.0 | 50.0 | 2.0 | FWC-8A10F |
| | | 10 | 9.0 | 70.0 | 2.5 | FWC-10A10F |
| | | 12 | 15.0 | 120.0 | 3.0 | FWC-12A10F |
| | | 16 | 25.0 | 150.0 | 3.5 | FWC-16A10F |
| | | 20 | 34.0 | 260.0 | 4.8 | FWC-20A10F |
| | | 25 | 60.0 | 390.0 | 6.0 | FWC-25A10F |
| | 600 Vac (UL) | 32 | 95.0 | 600.0 | 7.5 | FWC-32A10F |

† Watts loss at rated current.

### Dimensions — mm

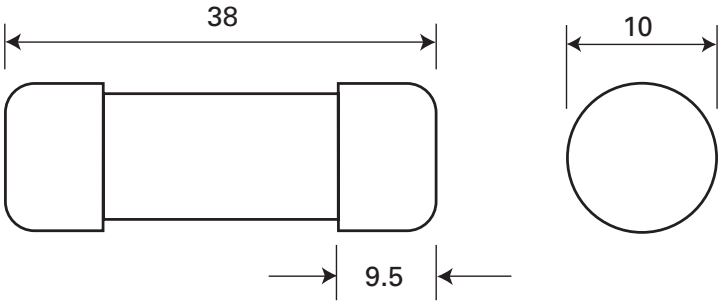


For details on electrical characteristics, contact Application Engineering and ask for data sheets:720011, 5785306

## FWP Ferrule

### 690 Vac (IEC) 10x38mm, 4 to 32 A

Ferrule style Class gR high speed fuses for the protection of AC/DC drives and semiconductors.

### Ratings

- Volts 690 Vac
- Amps 4-32 A
- IR
  - 200 kA RMS Sym.

### Operating class gR

### Agency information

- UL 248-13
- Designed and tested to IEC 60269, Part 4
- CE



| Fuse type | Fuse size | Rated voltage | Rated current (amps) | I²t (A²s) Pre-arcing | I²t (A²s) Clearing at 690 Vac | Watts loss (W)† $0.8I_n$ | Watts loss (W)† $I_n$ | Catalog no. |
|---|---|---|---|---|---|---|---|---|
| Without striker | 10x38 mm | 690 Vac (IEC) | 4 | 5.6 | 17 | 1.13 | 2.05 | FWP-4G10F |
| | | | 6 | 16.0 | 48 | 1.56 | 3.0 | FWP-6G10F |
| | | | 8 | 4.3 | 38 | 0.97 | 1.68 | FWP-8G10F |
| | | | 10 | 6.6 | 59 | 1.20 | 2.09 | FWP-10G10F |
| | | | 12 | 9.6 | 84 | 1.69 | 2.99 | FWP-12G10F |
| | | | 16 | 17.0 | 150 | 2.31 | 4.27 | FWP-16G10F |
| | | | 20 | 23.5 | 200 | 2.86 | 5.35 | FWP-20G10F |
| | | | 25 | 60.2 | 512 | 2.94 | 5.52 | FWP-25G10F |
| | | | 32** | 94.0 | 800 | 3.82 | 7.43 | FWP-32G10F |

† Watts loss at rated current.
**32 A rated current with 25mm² conductors, derate to 27 A with 6mm² conductors.

**Data sheet no. 10467**

## FWP Ferrule

### 690 Vac (IEC), 700 Vac (UL), 600 - 700 Vdc (UL), 14x51mm, 1 to 50 A

Ferrule style Class aR high speed fuses for the protection of DC common bus, DC drives, power converters/rectifiers and reduced rated voltage starters. Available with or without striker.

### Ratings

- Volts 690 Vac (IEC), 700 Vac/600 Vdc (UL) with striker (see table for striker version)
- Amps 1-50 A
- IR
  - 200 kA RMS Sym.
  - 50 kA at 800 Vdc (5-50 A non striker version)
  - 600 Vdc for striker version

### Operating class aR

### Agency information

- UL Recognized, (without striker only) JFHR2, E91958
- CSA (without striker only) Class 1422-30, 1422-90 (53787)
- Designed and tested to IEC 60269, Part 4
- CE

| Fuse type | Fuse size | Rated voltage | Rated current (amps) | $I^2t$ ($A^2s$) Pre-arcing | $I^2t$ ($A^2s$) Clearing at 700 Vac | Watts loss (W)† | Catalog no. |
|---|---|---|---|---|---|---|---|
| Without striker | 14x51mm (9/16"x2") | 700 Vac (UL) | 1 | 0.04 | 0.41 | 5.7 | FWP-1A14F |
| | | | 2 | 0.08 | 0.11 | 8.7 | FWP-2A14F |
| | | | 3 | 0.11 | 0.26 | 2.8 | FWP-3A14F |
| | | | 4 | 0.10 | 0.23 | 3.0 | FWP-4A14F |
| | | 690 Vac (IEC) 700 Vac/dc (UL) | 5 | 2.00 | 11.00 | 1.5 | FWP-5A14F |
| | | | 10 | 4.00 | 22.00 | 4.0 | FWP-10A14F |
| | | | 15 | 10.00 | 70.00 | 5.5 | FWP-15A14F |
| | | | 20 | 26.00 | 180.00 | 6.5 | FWP-20A14F |
| | | | 25 | 49.00 | 320.00 | 7.0 | FWP-25A14F |
| | | | 30 | 58.00 | 400.00 | 9.0 | FWP-30A14F |
| | | | 32 | 68.00 | 600.00 | 8.0 | FWP-32A14F |
| | | | 40 | 84.00 | 750.00 | 8.0 | FWP-40A14F |
| | | | 50 | 200.00 | 1800.00 | 9.0 | FWP-50A14F |
| With striker | | 700 Vac/600 Vdc (UL) | 10 | 4.00 | 32.00 | 2.0 | FWP-10A14FI |
| | | | 15 | 7.00 | 63.00 | 4.0 | FWP-15A14FI |
| | | | 20 | 26.00 | 234.00 | 4.0 | FWP-20A14FI |
| | | | 25 | 42.00 | 378.00 | 4.0 | FWP-25A14FI |
| | | | 30 | 52.00 | 468.00 | 6.0 | FWP-30A14FI |
| | | | 32 | 68.00 | 600.00 | 8.0 | FWP-32A14FI |
| | | | 40 | 84.00 | 750.00 | 8.0 | FWP-40A14FI |
| | | | 50 | 200.00 | 1800.00 | 9.0 | FWP-50A14FI |

† Watts loss at rated current.

### Dimensions — mm (in)

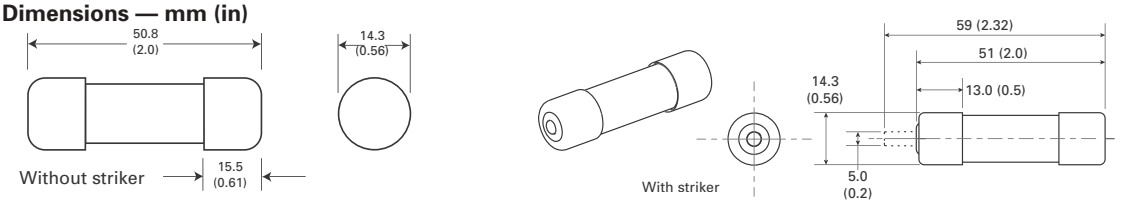


For details on electrical characteristics, contact Application Engineering and ask for data sheets: 720025, 5781724 fuses without striker; 5785566 fuses with striker

# FWP Ferrule

## 690 Vac 14x51mm, 1 to 50 A

Ferrule style Class gR high speed fuses for the protection of AC/DC drives, semiconductors and high voltage auxiliary circuits in electric vehicles. Available with or without striker.

### Ratings

- Volts 690 Vac
- Amps 4-50 A
- IR 200 kA RMS Sym.

### Operating class gR

### Agency information

- UL 248-13
- Designed and tested to IEC 60269, Part 4
- CE



| Fuse type | Fuse size | Rated voltage | Rated current (amps) | $I^2t$ ($A^2s$) Pre-arcing | $I^2t$ ($A^2s$) Clearing at 690 Vac | Watts loss (W)† $0.8I_n$ | Watts loss (W)† $I_n$ | Catalog no. |
|---|---|---|---|---|---|---|---|---|
| Without striker | 14x51mm (9/16"x2") | 690 Vac (UL/IEC) | 4 | 5.6 | 17 | 1.56 | 2.94 | FWP-4G14F |
| | | | 6 | 16 | 48 | 2.25 | 4.2 | FWP-6G14F |
| | | | 8 | 3.8 | 30 | 1.18 | 2.0 | FWP-8G14F |
| | | | 10 | 5.9 | 47 | 1.41 | 2.52 | FWP-10G14F |
| | | | 12 | 8.4 | 68 | 1.95 | 3.54 | FWP-12G14F |
| | | | 16 | 15 | 120 | 5.67 | 4.83 | FWP-16G14F |
| | | | 20 | 27 | 170 | 2.91 | 5.4 | FWP-20G14F |
| | | | 25 | 53 | 333 | 3.38 | 6.0 | FWP-25G14F |
| | | | 32 | 108 | 679 | 3.72 | 6.93 | FWP-32G14F |
| | | | 40 | 211 | 1331 | 4.13 | 7.52 | FWP-40G14F |
| | | | 50 | 350 | 2200 | 5.36 | 9.8 | FWP-50G14F |
| With striker | | | 8 | 3.8 | 30 | 1.18 | 2.0 | FWP-8G14FI |
| | | | 10 | 5.9 | 47 | 1.41 | 2.52 | FWP-10G14FI |
| | | | 12 | 8.4 | 68 | 1.95 | 3.54 | FWP-12G14FI |
| | | | 16 | 15 | 120 | 5.67 | 4.83 | FWP-16G14FI |
| | | | 20 | 27 | 170 | 2.91 | 5.4 | FWP-20G14FI |
| | | | 25 | 53 | 333 | 3.38 | 6.0 | FWP-25G14FI |
| | | | 32 | 108 | 679 | 3.72 | 6.93 | FWP-32G14FI |
| | | | 40 | 211 | 1331 | 4.13 | 7.52 | FWP-40G14FI |
| | | | 50 | 350 | 2200 | 5.36 | 9.8 | FWP-50G14FI |

† Watts loss at rated current.

### Dimensions — mm (in)

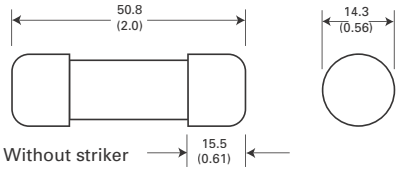


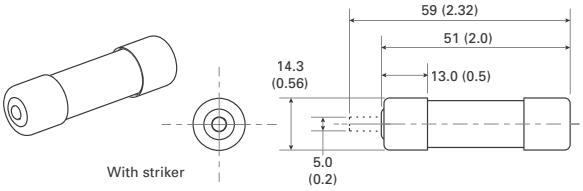


**Data sheet no. 10468**

## FWP Ferrule

### 700 Vac/dc (UL), 22x58mm, 20 to 100 A

Ferrule style high speed fuses for the protection of DC common bus, DC drives, power converters/rectifiers and reduced rated voltage starters. Available with or without striker.

### Ratings

- Volts 700 Vac/dc (UL)
- Amps 20-100 A
- IR
  - 200 kA RMS Sym.
  - 50 kA at 700 Vdc, L/R 5 ms

### Operating class aR

### Agency information

- UL Recognized, (without striker only) JFHR2, E91958
- CSA (without striker only) Class 1422-30, 1422-90 (53787)
- CE

| Fuse type | Fuse size | Rated voltage | Rated current (amps) | I²t (A²s) Pre-arcing | I²t (A²s) Clearing at 700 Vac | Watts loss (W)† | Catalog no. |
|---|---|---|---|---|---|---|---|
| Without striker | 22x58mm (7/8"x2-9/32") | 700 Vac/dc (UL | 20 | 23.0 | 330 | 5.0 | FWP-20A22F |
| | | | 25 | 37.0 | 530 | 6.0 | FWP-25A22F |
| | | | 32 | 55.0 | 780 | 8.0 | FWP-32A22F |
| | | | 40 | 68.0 | 960 | 12.0 | FWP-40A22F |
| | | | 50 | 155.0 | 2200 | 12.5 | FWP-50A22F |
| | | | 63 | 280.0 | 4000 | 15.0 | FWP-63A22F |
| | | | 80 | 550.0 | 7800 | 15.0 | FWP-80A22F |
| | | | 100 | 1100.0 | 15,600 | 16.5 | FWP-100A22F |
| With striker | | | 20 | 19.0 | 260 | 5.0 | FWP-20A22FI |
| | | | 25 | 34.0 | 410 | 6.0 | FWP-25A22FI |
| | | | 32 | 53.5 | 605 | 8.0 | FWP-32A22FI |
| | | | 40 | 68.0 | 750 | 9.0 | FWP-40A22FI |
| | | | 50 | 135.0 | 1600 | 9.5 | FWP-50A22FI |
| | | | 63 | 280.0 | 3080 | 11.0 | FWP-63A22FI |
| | | | 80 | 600.0 | 6600 | 13.5 | FWP-80A22FI |
| | | | 100 | 1100.0 | 12,500 | 16.0 | FWP-100A22FI |

† Watts loss at rated current.

### Dimensions — mm (in)

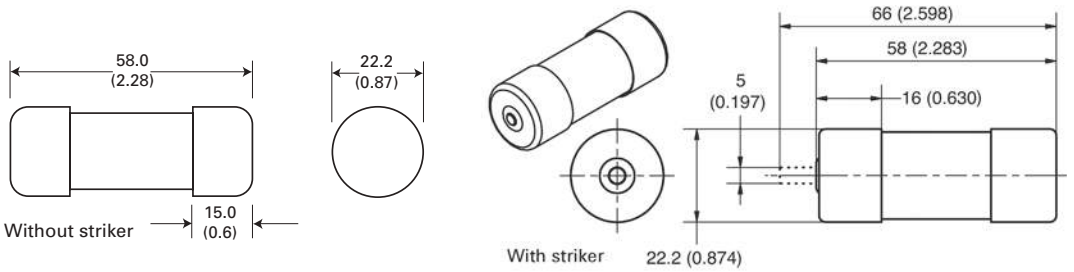


For details on electrical characteristics, contact Application Engineering and ask for data sheets:720026, 5781723

# FWP Ferrule

## 690 Vac, 500 Vdc 22x58mm, 20 to 100 A

Ferrule style Class gR high speed fuses for the protection of AC/DC drives, semiconductors and high voltage auxiliary circuits in electric vehicles. Available with or without striker.

### Ratings

- Volts
  - 690 Vac
  - 500 Vdc
- Amps 20-100 A
- IR
  - 200 kA RMS Sym.
  - 50 kA DC

### Operating class gR

### Agency information

- UL 248-13
- Designed and tested to IEC 60269, Part 4
- CE

| Fuse type | Fuse size | Rated voltage | Rated current (amps) | I²t (A²s) Pre-arcing | I²t (A²s) Clearing at 690 Vac | Watts loss (W)† $0.8I_n$ | Watts loss (W)† $I_n$ | Catalog no. |
|---|---|---|---|---|---|---|---|---|
| Without striker | 22x58 mm (7/8"x2-9/32") | 690 Vac, 500Vdc | 20 | 24 | 154 | 3.23 | 6.00 | FWP-20G22F |
| | | | 25 | 43 | 274 | 3.66 | 6.65 | FWP-25G22F |
| | | | 32 | 97 | 616 | 4.86 | 9.21 | FWP-32G22F |
| | | | 40 | 180 | 899 | 4.50 | 8.24 | FWP-40G22F |
| | | | 50 | 273 | 1362 | 6.26 | 11.85 | FWP-50G22F |
| | | | 63 | 516 | 2575 | 7.35 | 13.80 | FWP-63G22F |
| | | | 80 | 1092 | 5448 | 8.40 | 14.00 | FWP-80G22F |
| | | | 100 | 2065 | 10,300 | 9.40 | 17.70 | FWP-100G22F |
| With striker | | | 20 | 24 | 154 | 3.23 | 6.00 | FWP-20G22FI |
| | | | 25 | 43 | 274 | 3.66 | 6.65 | FWP-25G22FI |
| | | | 32 | 97 | 616 | 4.86 | 9.21 | FWP-32G22FI |
| | | | 40 | 180 | 899 | 4.50 | 8.24 | FWP-40G22FI |
| | | | 50 | 273 | 1362 | 6.26 | 11.85 | FWP-50G22FI |
| | | | 63 | 516 | 2575 | 7.35 | 13.80 | FWP-63G22FI |
| | | | 80 | 1092 | 5448 | 8.40 | 14.00 | FWP-80G22FI |
| | | | 100 | 2065 | 10,300 | 9.40 | 17.70 | FWP-100G22FI |

† Watts loss at rated current.

### Dimensions — mm (in)

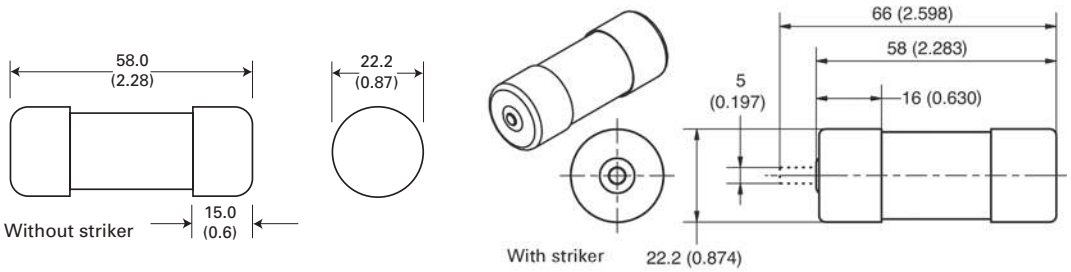


Data sheet no. 10469

## FWK Ferrule

### 750 Vdc (IEC), 20x127mm and 25x146mm, 5 to 60 A

Ferrule style high speed fuses for the protection of DC common bus, DC drives, power converters/rectifiers and reduced rated voltage starters.

### Ratings

- Volts 750 Vdc (IEC)
- Amps
  - 5-30 A (20x127mm)
  - 35-60 A (25x146mm)
- IR 50 kA at 750 Vdc, L/R 10-15 ms

### Operating class gG

### Agency information

- CE

| Fuse size | Rated voltage | Rated current (amps) | I²t (A²s) Pre-arcing | I²t (A²s) Clearing at 750 Vac | Watts loss (W)† | Catalog no. |
|---|---|---|---|---|---|---|
| 20x127mm (13/32"x5") | 750 Vdc (IEC) | 5 | 8.5 | 16 | 6.7 | FWK-5A20F |
| | | 8 | 50 | 100 | 8.8 | FWK-8A20F |
| | | 10 | 95 | 200 | 8.5 | FWK-10A20F |
| | | 15 | 100 | 240 | 5.0 | FWK-15A20F |
| | | 20 | 125 | 315 | 7.8 | FWK-20A20F |
| | | 25 | 400 | 1100 | 6.5 | FWK-25A20F |
| | | 30 | 800 | 2600 | 6.5 | FWK-30A20F |
| 25x146mm (1"x5-3/4") | | 35 | 1300 | 4600 | 6.0 | FWK-35A25F |
| | | 40 | 1600 | 5300 | 6.8 | FWK-40A25F |
| | | 50 | 3100 | 12,000 | 7.3 | FWK-50A25F |
| | | 60 | 5900 | 24,000 | 7.7 | FWK-60A25F |

† Watts loss at rated current.

### Dimensions — mm (in)

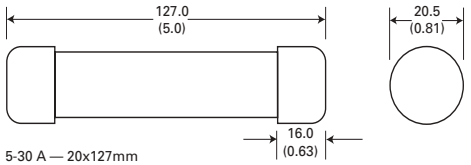


5-30 A — 20x127mm

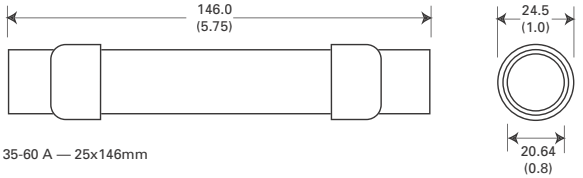


35-60 A — 25x146mm

For details on electrical characteristics, contact Application Engineering and ask for data sheets:720039, 5785031

## FWJ Ferrule

### 1000 Vac/800 Vdc (UL), 14x67mm, 20 to 30 A

Ferrule style high speed fuses for the protection of DC common bus, DC drives, power converters/rectifiers, reduced rated voltage starters and high voltage auxiliary circuits in electric vehicles.. Available with or without striker for remote indication.

### Ratings

- Volts 1000 Vac/800 Vdc
- Amps 20-30 A
- IR
  - 25 kA RMS Sym.
  - 50 kA at 800 Vdc

### Operating class aR

### Agency information

- UL Recognized, JFHR2, E91958
- CE



| Fuse size | Rated voltage | Rated current (amps) | $I^2t$ ($A^2s$) Pre-arcing | $I^2t$ ($A^2s$) Clearing at 1000 Vac | Watts loss (W)† | Catalog no. |
|---|---|---|---|---|---|---|
| 14x67mm (9/16"x2-5/8") | 1000 Vac/ 800 Vdc (UL) | 20 | 25 | 220 | 9 | FWJ-20A14F |
| | | 25 | 33 | 350 | 11 | FWJ-25A14F |
| | | 30 | 52 | 450 | 14 | FWJ-30A14F |

† Watts loss at rated current.

### Dimensions — mm

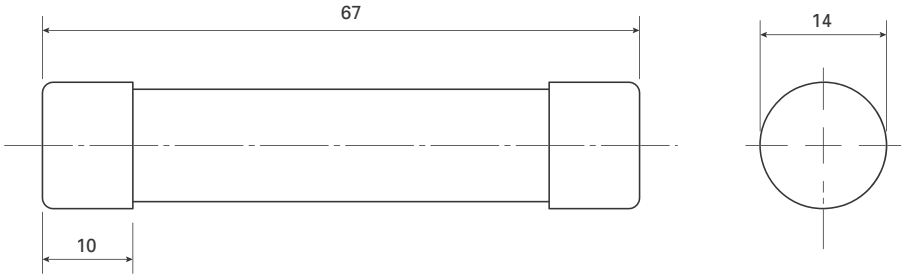


For details on electrical characteristics, contact Application Engineering and ask for data sheets:720028, 5785315

## FWL Ferrule

### 1200 Vac/1000 Vdc (IEC), 20x127mm, 20 to 30 A

Ferrule style high speed fuses for the protection of DC common bus, DC drives, power converters/rectifiers and reduced rated voltage starters. Available with indicator.

### Ratings

- Volts
  - 1200 Vac (IEC)
  - 1000 Vdc (IEC)
- Amps 20-30 A
- IR
  - 50 kA RMS Sym.
  - 50 kA at 1000 Vdc

### Operating class gR

### Agency information

- IEC 60077
- CE

| Fuse type | Fuse size | Rated voltage | Rated current (amps) | I²t (A²s) Pre-arcing | I²t (A²s) Clearing at 1000 Vac | Watts loss (W)† | Catalog no. |
|---|---|---|---|---|---|---|---|
| Without indicator | 20x127mm (13/16"x5") | 1200 Vac/1000 Vdc (IEC) | 20 | 675 | 1550 | 5.9 | FWL-20A20F |
| | | | 25 | 1200 | 2760 | 6.5 | FWL-25A20F |
| | | | 30 | 1850 | 4300 | 7.5 | FWL-30A20F |
| With indicator | | | 20 | 675 | 1550 | 5.9 | FWL-20A20FI |
| | | | 25 | 1200 | 2760 | 6.5 | FWL-25A20FI |
| | | | 30 | 1850 | 4300 | 7.5 | FWL-30A20FI |

† Watts loss at rated current.

### Dimensions — mm

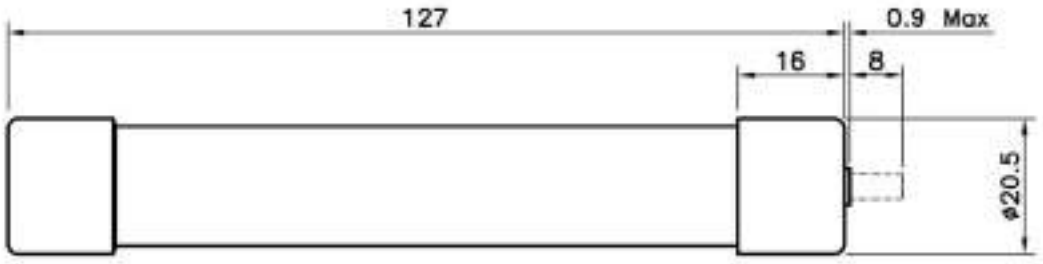


For details on electrical characteristics, contact Application Engineering and ask for data sheets:720040, 5785455

## FWS Ferrule

### 1400 - 2000 Vac/1000 Vdc (IEC), 20x127mm, 2 to 15 A

Ferrule style high speed fuses for the protection of DC common bus, DC drives, power converters/rectifiers and reduced rated voltage starters. Available with indicator.

### Ratings

- Volts
  - 2000 Vac/1000 Vdc (IEC, 2-8 A)
  - 1400 Vac/1000 Vdc (IEC, 10-15 A)
- Amps 2-15 A
- IR
  - 50 kA RMS Sym.
  - 50 kA at 1000 Vdc (2-10 A only)

### Operating class gG

### Agency information

- IEC 60077
- CE



| Fuse type | Fuse size | Rated voltage | Rated current (amps) | I²t (A²s) Pre-arcing | I²t (A²s) Clearing at 1000 Vac | Watts loss (W)† | Catalog no. |
|---|---|---|---|---|---|---|---|
| Without indicator | 20x127mm (13/16"x5") | 2000 Vac/1000 Vdc (IEC) | 2 | 0.8 | 2.4 | 4.4 | FWS-2A20F |
| | | | 6 | 27.0 | 81.0 | 6.7 | FWS-6A20F |
| | | | 8 | 64.0 | 192.0 | 7.6 | FWS-8A20F |
| | | 1400 Vac/1000 Vdc (IEC) | 10 | 118.0 | 277.0 | 3.0 | FWS-10A20F |
| | | | 12 | 170.0 | 380.0 | 3.4 | FWS-12A20F |
| | | | 15 | 209.0 | 500.0 | 5.0 | FWS-15A20F |
| With indicator | | 2000 Vac/1000 Vdc (IEC) | 2 | 0.8 | 2.4 | 4.4 | FWS-2A20FI |
| | | | 6 | 27.0 | 81.0 | 6.7 | FWS-6A20FI |
| | | | 8 | 64.0 | 192.0 | 7.6 | FWS-8A20FI |
| | | 1400 Vac/1000 Vdc (IEC) | 10 | 118.0 | 277.0 | 3.0 | FWS-10A20FI |
| | | | 12 | 170.0 | 380.0 | 3.4 | FWS-12A20FI |
| | | | 15 | 209.0 | 500.0 | 5.0 | FWS-15A20FI |

† Watts loss at rated current.

### Dimensions — mm

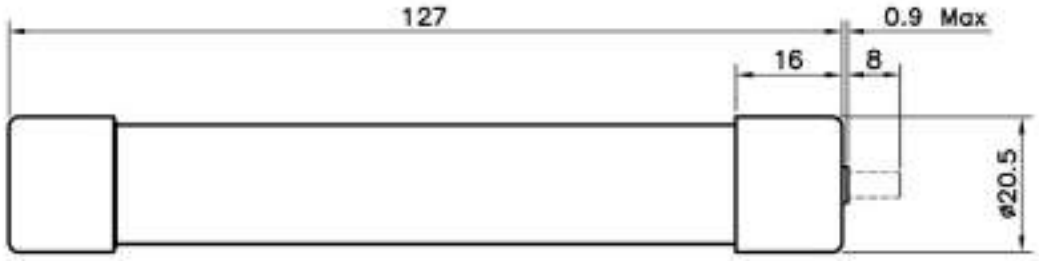


For details on electrical characteristics, contact Application Engineering and ask for data sheets:720040, 5785109

## Ferrule fuse accessories

### JM70100 DIN-Rail/panel mount block for 22x58mm fuses

Modular, open-style fuse blocks for 22x58mm cylindrical fuses feature versatile 35mm DIN-Rail or screw-to-panel mounting. Available optional IP20 finger-safe covers with lockout/tagout capability come in indicating and non-indicating versions. For use with FWP fuses.

#### Ratings

- Volts 700 Vac
- Amps 100 A
- Withstand rating 200 kA

#### Agency information

- UL Recognized, Guide IZTL2, File 14853

| Catalog no. | Poles | Terminal type | Optional IP20 cover catalog no.* Indicating** | Non-indicating |
|---|---|---|---|---|
| JM70100-1CR | 1 | Box lug | CVRI-J-60060 | CVR-J-60060 |
| JM70100-2CR | 2 | | | |
| JM70100-3CR | 3 | | | |

* Order separately, one cover per pole.
**Indication requires 90 V minimum and energized, closed circuit.

**Data sheet no. 10496**

### CHM modular DIN-Rail mount holders for 10x38mm fuses

Bussmann series compact IP20 finger-safe modular DIN-Rail mount fuse holders for 10x38mm cylindrical fuses.

| Catalog no. With indicator | Without indicator | Rated voltage and current | Agency information | Number of poles | Terminal rating | Rated withstand capacity | Compatible Bussmann series fuses |
|---|---|---|---|---|---|---|---|
| CHM1DIU | CHM1DU | IEC 690 Vac/32 A<br>UL 600 Vac/30 A | IEC 60269-2<br>UR; CSA; CCC | 1 | IEC: 1 to 25mm² 70°C PVC/copper cable, solid, stranded, fine stranded, fork lug, comb busbar; single and dual | IEC 120 kA RMS Sym.<br>UL 200 kA RMS Sym.<br>CCC 100 kA RMS Sym. | FWA, FWC. |
| CHM2DIU | CHM2DU | | | 2 | | | |
| CHM3DIU | CHM3DU | | | 3 | | | |
| CHM4DIU | CHM4DU | | | 4 | | | |
| CHM1DNIU | CHM1DNU | | IEC 60269-2 | 1-pole + 1 neutral | | | |
| CHM3DNIU | CHM3DNU | | | 3-pole + 1 neutral | | | |
| — | CHM1DNXU | IEC 690 Vac/32 A | IEC 60269-2 | 1 neutral | | N/A | N/A |

**Data sheet no. 10430**

## Ferrule fuse accessories

### CH14 and CH22 modular DIN-Rail holders

Bussmann series compact DIN-Rail mount fuse holders for 14x51mm and 22x58mm cylindrical fuses. Available in different versions with neutral and microswitch.

### Mounting

- 35mm DIN-Rail
- Panel mount (2xM4 screws)

CH14

CH22

| Catalog no. | | | | | | | |
|---|---|---|---|---|---|---|---|
| Without indicator | With indicator | Description | Rated voltage and current | Agency markings | Terminal rating | Rated withstand capacity | Compatible Bussmann series fuses |
| **14x51mm** | | | | | | | |
| CH141DNXU | — | Neutral only | 690 Vac/50 A<br>750 Vdc/50 A | IEC 60269-1<br>IEC 60269-2 | Size: 2.5-50mm²<br>Torque: 3 N•m max | 120 kA AC | FWX-A14F[1,]<br>FWH-A14F[1,]<br>FWP-A14F[1, 2] |
| CH141DU | CH141DIU | 1 pole | | | | | |
| CH142DU | CH142DIU | 2 pole | | | | | |
| CH143DU | CH143DIU | 3 pole | | | | | |
| CH144DU | CH144DIU | 4 pole | | | | | |
| CH141DNU | CH141DNIU | 1 pole + neutral | | | | | |
| CH143DNU | CH143DNIU | 3 pole + neutral | | | | | |
| CH141DMSU-F | — | 1 pole with microswitch | | | | | |
| CH143DMSU-F | — | 3 pole with microswitch | | | | | |
| CH143DNMSU-F | — | 3 pole +neutral with microswitch | | | | | |
| **22x58mm** | | | | | | | |
| CH221DNXU | — | Neutral holder | 690 Vac/125 A<br>1000 Vdc/125 A | IEC 60269-1<br>IEC 60269-2 | Size: 4 - 50 mm²<br>Torque: 4 N•m max | 120 kA AC<br>50 kA DC | FWP ferrule[1, 2] |
| CH221DU | CH221DIU | 1 pole fuse holder | | | | | |
| CH222DU | CH222DIU | 2 pole fuse holder | | | | | |
| CH223DU | CH223DIU | 3 pole fuse holder | | | | | |
| CH224DU | CH224DIU | 4 pole fuse holder | | | | | |
| CH221DNU | CH221DNIU | 1 pole + neutral | | | | | |
| CH223DNU | CH223DNIU | 3 pole + neutral | | | | | |
| — | CH221DMSU-F | 1 pole with microswitch | | | | | |
| — | CH223DMSU-F | 3 pole with microswitch | | | | | |
| — | CH223DNMSU-F | 3 pole with microswitch + neutral | | | | | |

[1] Maximum allowed continuous current applies. Please refer to data sheet for details.
[2] Please consult our application engineers if you wish to use a FWP fuse with a striker option.

### CH14 and CH22 accessories

| Catalog no. | Description | For holder |
|---|---|---|
| AL-D | Multi-pole ganging clips, one kit will gang up to 4-poles together | CH14 and CH22 |
| CH14-P | Multi-pole handle pins, one kit will gang up to 12 handles together | CH14 and CH22 |
| CH14-L | Lockout padlock support, it will accept up to 5mm diameter padlock shank | CH14 |
| CH22-L | Lockout padlock support, it will accept up to 5mm diameter padlock shank | CH22 |
| CH14-IP20 | IP20 protection accessory, provides IP20 protection to terminals with 10mm² or less cable | CH14 |
| CH22-IP20 | | CH22 |
| CH14-MS1 | 1-pole microswitch for blown fuse monitoring | CH14 |
| CH22-MS1 | | CH22 |
| CH14-MS3 | 3-pole microswitch for blown fuse monitoring | CH14 |
| CH22-MS3 | | CH22 |

**Data sheet no. 10080 (CH14), 10115 (CH22)**

## 170M — Square Body size 000 and 00, DIN 43653

### 690 Vac (IEC), 700 Vac/dc (UL), 10 to 400 A

Square body DIN 43653 bolted tags high speed fuses, for the protection of DC common bus, DC drives, power converters/ rectifiers and reduced rated voltage starters. Available with and without visual indicator, and Type T indicator for a microswitch.

### Ratings

- Volts
  - 690 Vac (IEC, size 000 and 00)
  - 700 Vac (UL, size 000; size 00 100-400 A only)
  - 700 Vdc (UL, size 000)
- Amps 10-400 A
- IR
  - 200 kA RMS Sym.
  - 50 kA at 700 Vdc (size 000 only)

### Operating class

- gR - size 000 (10-63 A), size 00 (25-80 A)
- aR - size 000 (>63 A), size 00 (>80 A)

### Agency Information

- Designed and tested to IEC 60269 Part 4
- UL Recognized, JFHR2, E125085
- CSA Class 53787, File 1422-30 on size 000
- CCC
- CE

### Dimensions — mm

The dotted line represents the Type T indicator fuse.

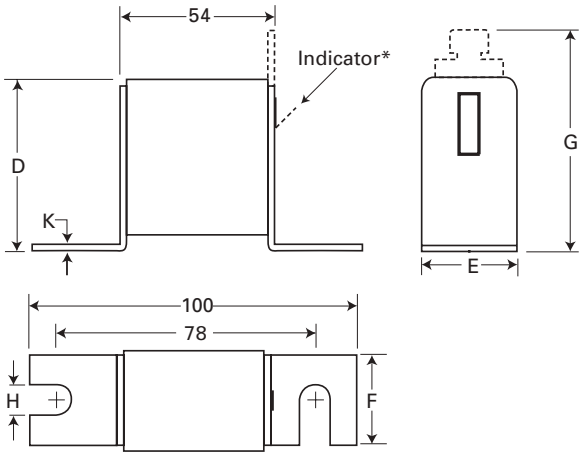


**Type -U/80, -/80, -TN/80**

| Size | D | E | F | G | H | K |
|---|---|---|---|---|---|---|
| 000 | 40 | 21 | 20 | 51 | 8 | 2 |
| 00 | 51 | 30 | 28 | 67 | 10 | 2 |

* Indicatior for size 00 fuses is a red pin.

For details on electrical characteristics, contact Application Engineering and ask for data sheets:170K6310 (Size 000), 170K6312 (Size 00)

## 170M — Square Body size 000 and 00, DIN 43653

### 690 Vac (IEC), 700 Vac/dc (UL), 10 to 400 A

| Fuse size | Rated voltage | Rated current (amps) | I²t (A²s) Pre-Arcing | I²t (A²s) Clearing at 660 Vac | Watts loss (W)† | Catalog no. -U/80 without indicator | Catalog no. -/80 with indicator | Catalog no. -TN/80 Type T indicator for microswitch |
|---|---|---|---|---|---|---|---|---|
| 000 | 690 Vac (IEC) 700 Vac/dc (UL) | 10 | 3.8 | 25.5 | 3.0 | 170M1308 | 170M1358 | 170M1408 |
| | | 16 | 7.2 | 48.0 | 5.5 | 170M1309 | 170M1359 | 170M1409 |
| | | 20 | 11.5 | 78.0 | 7.0 | 170M1310 | 170M1360 | 170M1410 |
| | | 25 | 19.0 | 130.0 | 9.0 | 170M1311 | 170M1361 | 170M1411 |
| | | 32 | 40.0 | 270.0 | 10.0 | 170M1312 | 170M1362 | 170M1412 |
| | | 40 | 69.0 | 460.0 | 12.0 | 170M1313 | 170M1363 | 170M1413 |
| | | 50 | 115.0 | 770.0 | 15.0 | 170M1314 | 170M1364 | 170M1414 |
| | | 63 | 215.0 | 1450.0 | 16.0 | 170M1315 | 170M1365 | 170M1415 |
| | | 80 | 380.0 | 2550.0 | 19.0 | 170M1316 | 170M1366 | 170M1416 |
| | | 100 | 695.0 | 4650.0 | 24.0 | 170M1317 | 170M1367 | 170M1417 |
| | | 125 | 1250.0 | 8500.0 | 28.0 | 170M1318 | 170M1368 | 170M1418 |
| | | 160 | 2350.0 | 16,000.0 | 32.0 | 170M1319 | 170M1369 | 170M1419 |
| | | 200 | 4200.0 | 28,000.0 | 37.0 | 170M1320 | 170M1370 | 170M1420 |
| | | 250 | 7750.0 | 51,500.0 | 42.0 | 170M1321 | 170M1371 | 170M1421 |
| | | 315 | 12,000.0 | 80,500.0 | 53.0 | 170M1322 | 170M1372 | 170M1422 |
| 00 | 690 Vac (IEC) | 25 | 19.0 | 130.0 | 6.0 | — | 170M2608 | 170M2658 |
| | | 32 | 28.5 | 195.0 | 7.0 | | 170M2609 | 170M2659 |
| | | 40 | 50.0 | 360.0 | 9.0 | | 170M2610 | 170M2660 |
| | | 50 | 95.0 | 640.0 | 10.0 | | 170M2611 | 170M2661 |
| | | 63 | 170.0 | 1200.0 | 12.0 | | 170M2612 | 170M2662 |
| | | 80 | 310.0 | 2100.0 | 15.0 | | 170M2613 | 170M2663 |
| 00 | 690 Vac (IEC) 700 Vac (UL) | 100 | 620.0 | 4150.0 | 20.0 | | 170M2614 | 170M2664 |
| | | 125 | 1000.0 | 6950.0 | 25.0 | | 170M2615 | 170M2665 |
| | | 160 | 1900.0 | 13,000.0 | 30.0 | | 170M2616 | 170M2666 |
| | | 200 | 3400.0 | 23,000.0 | 35.0 | | 170M2617 | 170M2667 |
| | | 250 | 6250.0 | 42,000.0 | 45.0 | | 170M2618 | 170M2668 |
| | | 315 | 10,000.0 | 68,500.0 | 55.0 | | 170M2619 | 170M2669 |
| | | 350 | 13,500.0 | 91,500.0 | 60.0 | | 170M2620 | 170M2670 |
| | | 400 | 18,000.0 | 125,000.0 | 70.0 | | 170M2621 | 170M2671 |

† Watts loss at rated current.



For details on electrical characteristics, contact Application Engineering and ask for data sheets:170K6310 (Size 000), 170K6312 (Size 00)

## 170M — Square Body size 1* to 3, DIN 43653

### 690 Vac (IEC), 700 Vac (UL), 40 to 2000 A

Square body DIN 43653 bolted tags high speed fuses, for the protection of DC common bus, DC drives, power converters/ rectifiers and reduced rated voltage starters. Available with visual indicator, and Type K and T indicator for a microswitch.

Ratings

- Volts
  - 690 Vac (IEC)/700 Vac (UL)
  - 750 Vdc (UL, see catalog number table for specific fuses)
- Amps 40-2000 A
- IR 200 kA RMS Sym.

### Operating class aR

### Agency information

- Designed and tested to IEC 60269 Part 4
- UL Recognized, JFHR2*, E125085
- CSA Class 53787, File 1422-30*
- CCC except where noted
- CE

* Consult your Bussmann series product representative for status.

### Dimensions — mm

1mm = 0.0394"

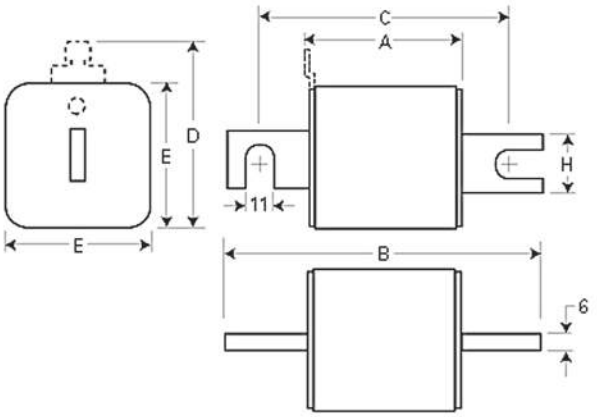


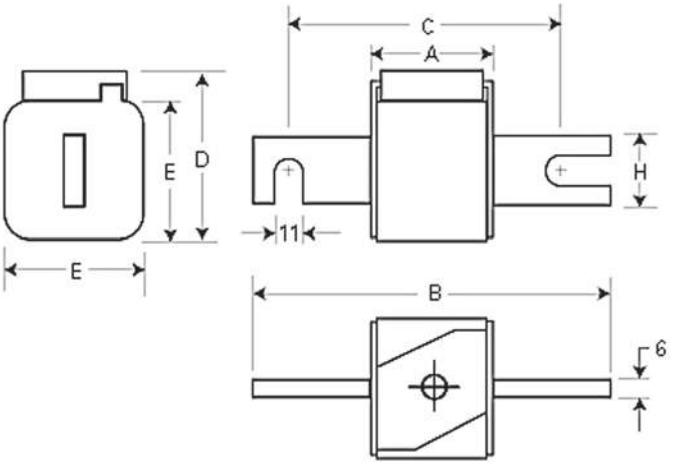


**Type -/80, -TN/80, -/110, -TN/110**

| Size | A | B | B[1] | C | C[1] | D[2] | E | H |
|---|---|---|---|---|---|---|---|---|
| 1* | 50 | 104 | 134 | 78 | 108 | 58 | 45 | 22 |
| 1 | 50 | 108 | 138 | 78 | 108 | 66 | 53 | 25 |
| 2 | 50 | 108 | 138 | 78 | 108 | 75 | 61 | 25 |
| 3 | 51 | 109 | 139 | 78 | 108 | 90 | 76 | 30 |

1 Valid for fuse Types -/110 and -TN/110.
2 Valid for fuse Types -TN/80 and -TN/110.

**Type -KN/80, -KN/110**

| Size | A | B | B[3] | C | C[3] | D | E | H |
|---|---|---|---|---|---|---|---|---|
| 1* | 50 | 104 | 134 | 78 | 108 | 59 | 45 | 22 |
| 1 | 50 | 108 | 138 | 78 | 108 | 69 | 53 | 25 |
| 2 | 50 | 108 | 138 | 78 | 108 | 77 | 61 | 25 |
| 3 | 51 | 109 | 139 | 78 | 108 | 92 | 76 | 30 |

3 Valid for fuse Type -KN/110.

For details on electrical characteristics, contact Application Engineering and ask for data sheets:170K6314 (Size 1*), 170K6316 (Size 1), 170K6318 (Size 2), 170K6320 (Size 3)

## 170M — Square Body size 1* to 3, DIN 43653

### 690 Vac (IEC), 700 Vac (UL), 40 to 2000 A

| Fuse size | Rated voltage | Rated current (amps) | I²t (A²s) Pre-arcing | I²t (A²s) Clearing at 660 Vac | Watts loss (W)† | Catalog no. -/80 with indicator | Catalog no. -TN/80 Type T indicator for micro | Catalog no. -KN/80 Type K indicator for micro | Catalog no. -/110 with indicator | Catalog no. -TN/110 Type T indicator for micro | Catalog no. -KN/110 Type K indicator for micro |
|---|---|---|---|---|---|---|---|---|---|---|---|
| 1* | 690 Vac (IEC) 700 Vac (UL) | 40 | 40 | 270 | 9 | 170M3008 | 170M3058 | 170M3108 | 170M3158 | 170M3208 | 170M3258 |
| | | 50 | 77 | 515 | 11 | 170M3009 | 170M3059 | 170M3109 | 170M3159 | 170M3209 | 170M3259 |
| | | 63 | 115 | 770 | 14 | 170M3010 | 170M3060 | 170M3110 | 170M3160 | 170M3210 | 170M3260 |
| | | 80 | 185 | 1250 | 18 | 170M3011 | 170M3061 | 170M3111 | 170M3161 | 170M3211 | 170M3261 |
| | | 100 | 360 | 2450 | 21 | 170M3012 | 170M3062 | 170M3112 | 170M3162 | 170M3212 | 170M3262 |
| | | 125 | 550 | 3700 | 26 | 170M3013 | 170M3063 | 170M3113 | 170M3163 | 170M3213 | 170M3263 |
| | | 160 | 1100 | 7500 | 30 | 170M3014 | 170M3064 | 170M3114 | 170M3164 | 170M3214 | 170M3264 |
| | | 200 | 2200 | 15,000 | 35 | 170M3015 | 170M3065 | 170M3115 | 170M3165 | 170M3215 | 170M3265 |
| | | 250 | 4200 | 28,500 | 40 | 170M3016 | 170M3066 | 170M3116 | 170M3166 | 170M3216 | 170M3266 |
| | | 315 | 7000 | 46,500 | 50 | 170M3017 | 170M3067 | 170M3117 | 170M3167 | 170M3217 | 170M3267 |
| | | 350 | 10,000 | 68,500 | 55 | 170M3018 | 170M3068 | 170M3118 | 170M3168 | 170M3218 | 170M3268 |
| | | 400 | 15,000 | 105,000 | 60 | 170M3019 | 170M3069 | 170M3119 | 170M3169 | 170M3219 | 170M3269 |
| | | 450 | 21,000 | 140,000 | 65 | 170M3020 | 170M3070 | 170M3120 | 170M3170 | 170M3220 | 170M3270 |
| | | 500 | 27,000 | 180,000 | 70 | 170M3021 | 170M3071 | 170M3121 | 170M3171 | 170M3221 | 170M3271 |
| | | 550 | 34,000 | 230,000 | 75 | 170M3022 | 170M3072 | 170M3122 | 170M3172 | 170M3222 | 170M3272 |
| | | 630 | 48,500 | 325,000 | 80 | 170M3023 | 170M3073 | 170M3123 | 170M3173 | 170M3223 | 170M3273 |
| 1 | 690 Vac (IEC) 700 Vac (UL) | 200 | 1650 | 11,500 | 45 | 170M4008 | 170M4058 | 170M4108 | 170M4158 | 170M4208 | 170M4258 |
| | | 250 | 3100 | 21,000 | 55 | 170M4009 | 170M4059 | 170M4109 | 170M4159 | 170M4209 | 170M4259 |
| | | 315 | 6200 | 42,000 | 58 | 170M4010 | 170M4060 | 170M4110 | 170M4160 | 170M4210 | 170M4260 |
| | | 350 | 8500 | 59,000 | 60 | 170M4011 | 170M4061 | 170M4111 | 170M4161 | 170M4211 | 170M4261 |
| | | 400 | 13,500 | 91,500 | 65 | 170M4012 | 170M4062 | 170M4112 | 170M4162 | 170M4212 | 170M4262 |
| | | 450 | 17,000 | 120,000 | 70 | 170M4013 | 170M4063 | 170M4113 | 170M4163 | 170M4213 | 170M4263 |
| | | 500 | 25,000 | 170,000 | 72 | 170M4014 | 170M4064 | 170M4114 | 170M4164 | 170M4214 | 170M4264 |
| | | 550 | 34,000 | 230,000 | 75 | 170M4015 | 170M4065 | 170M4115 | 170M4165 | 170M4215 | 170M4265 |
| | | 630 | 52,000 | 350,000 | 80 | 170M4016 | 170M4066 | 170M4116 | 170M4166 | 170M4216 | 170M4266 |
| | | 700 | 69,500 | 465,000 | 85 | 170M4017 | 170M4067 | 170M4117 | 170M4167 | 170M4217 | 170M4267 |
| | | 800 | 105,000 | 725,000 | 95 | 170M4018 | 170M4068 | 170M4118 | 170M4168 | 170M4218 | 170M4268 |
| | | 900[2] | 155,000 | 850,000[2] | 100 | 170M4019[1] | 170M4069[1] | 170M4119[1] | 170M4169[1] | 170M4219[1] | 170M4269[1] |
| 2 | 690 Vac (IEC) 700 Vac (UL) | 400 | 11,000 | 74,000 | 65 | 170M5008 | 170M5058 | 170M5108 | 170M5158 | 170M5208 | 170M5258 |
| | | 450 | 15,500 | 105,000 | 70 | 170M5009 | 170M5059 | 170M5109 | 170M5159 | 170M5209 | 170M5259 |
| | | 500 | 21,500 | 145,000 | 75 | 170M5010 | 170M5060 | 170M5110 | 170M5160 | 170M5210 | 170M5260 |
| | | 550 | 28,000 | 190,000 | 80 | 170M5011 | 170M5061 | 170M5111 | 170M5161 | 170M5211 | 170M5261 |
| | | 630 | 41,000 | 275,000 | 90 | 170M5012 | 170M5062 | 170M5112 | 170M5162 | 170M5212 | 170M5262 |
| | | 700 | 60,500 | 405,000 | 95 | 170M5013 | 170M5063 | 170M5113 | 170M5163 | 170M5213 | 170M5263 |
| | | 800 | 86,000 | 575,000 | 105 | 170M5014 | 170M5064 | 170M5114 | 170M5164 | 170M5214 | 170M5264 |
| | | 900 | 125,000 | 840,000 | 110 | 170M5015 | 170M5065 | 170M5115 | 170M5165 | 170M5215 | 170M5265 |
| | | 1000 | 180,000 | 1,250,000 | 115 | 170M5016 | 170M5066 | 170M5116 | 170M5166 | 170M5216 | 170M5266 |
| | | 1100[3] | 245,000 | 1,600,000 | 120 | 170M5017 | 170M5067 | 170M5117 | 170M5167 | 170M5217 | 170M5267 |
| | | 1250[3] | 365,000 | 2,400,000 | 130 | 170M5018 | 170M5068 | 170M5118 | 170M5168 | 170M5218 | 170M5268 |
| 3 | 690 Vac (IEC) 700 Vac (UL) | 500 | 14,000 | 95,000 | 95 | 170M6008 | 170M6058 | 170M6108 | 170M6158 | 170M6208 | 170M6258 |
| | | 550 | 19,500 | 135,000 | 100 | 170M6009 | 170M6059 | 170M6109 | 170M6159 | 170M6209 | 170M6259 |
| | | 630 | 31,000 | 210,000 | 105 | 170M6010 | 170M6060 | 170M6110 | 170M6160 | 170M6210 | 170M6260 |
| | | 700 | 44,500 | 300,000 | 110 | 170M6011 | 170M6061 | 170M6111 | 170M6161 | 170M6211 | 170M6261 |
| | | 800 | 69,500 | 465,000 | 115 | 170M6012 | 170M6062 | 170M6112 | 170M6162 | 170M6212 | 170M6262 |
| | | 900 | 100,000 | 670,000 | 120 | 170M6013 | 170M6063 | 170M6113 | 170M6163 | 170M6213 | 170M6263 |
| | | 1000 | 140,000 | 945,000 | 125 | 170M6014 | 170M6064 | 170M6114 | 170M6164 | 170M6214 | 170M6264 |
| | | 1100 | 190,000 | 1,300,000 | 130 | 170M6015 | 170M6065 | 170M6115 | 170M6165 | 170M6215 | 170M6265 |
| | | 1250 | 290,000 | 1,950,000 | 140 | 170M6016 | 170M6066 | 170M6116 | 170M6166 | 170M6216 | 170M6266 |
| | | 1400 | 370,000 | 2,450,000 | 155 | 170M6017 | 170M6067 | 170M6117 | 170M6167 | 170M6217 | 170M6267 |
| | | 1500 | 460,000 | 3,100,000 | 160 | 170M6018 | 170M6068 | 170M6118 | 170M6168 | 170M6218 | 170M6268 |
| | | 1600 | 580,000 | 3,900,000 | 160 | 170M6019 | 170M6069 | 170M6119 | 170M6169 | 170M6219 | 170M6269 |
| | | 1800[4] | 880,000 | 5,250,000[4] | 165 | 170M6020†† | 170M6070†† | 170M6120 | 170M6170†† | 170M6220†† | 170M6270 |
| | | 2000[5] | 1,150,000 | 6,350,000[5] | 175 | 170M6021 | 170M6071 | 170M6121 | 170M6171 | 170M6221 | 170M6271 |

† Watts loss at rated current.
††DC voltage rated at 750 Vdc, IR 130 kA DC, UL Recognized, File E12085.
1 Not UL Recognized, 2 Rated voltage: 550 Vac IEC, 3 Rated voltage: 600 Vac IEC, 700 Vac UL, 4 Rated voltage: 600 Vac IEC, 500 Vac UL, 5 Rated voltage: 550 Vac IEC, 500 Vac UL.

For details on electrical characteristics, contact Application Engineering and ask for data sheets: 170K6314 (Size 1*), 170K6316 (Size 1), 170K6318 (Size 2), 170K6320 (Size 3)

## 170M — Square Body size 00, DIN 43653

### 1000 Vac (IEC and UL), 20 to 315 A

Square body DIN 43653 bolted tags high speed fuses, for the protection of DC common bus, DC drives, power converters/ rectifiers and reduced rated voltage starters. Available with indicator or Type T indicator for a microswitch.

### Ratings

- Volts
  - 1000 Vac (IEC and UL 20-250 A)
  - 900 Vac (IEC, 315 A)
- Amps 20-315 A
- IR 125 kA RMS Sym.

### Operating class aR

### Agency information

- Designed and tested to IEC 60269 Part 4
- UL Recognized, E125085, JFHR2 (20-250 A)
- CSA Class 53787, File 1422-30 (20-250 A)
- CE

| Fuse size | Rated voltage | Rated current (amps) | $I^2t$ ($A^2s$) Pre-arcing | $I^2t$ ($A^2s$) Clearing at rated voltage | Watts loss (W)† | Catalog no. 00/80 with indicator | Catalog no. 00TN/80 Type T indicator for micro |
|---|---|---|---|---|---|---|---|
| 00 | 1000 Vac (IEC/UL) | 20 | 20 | 140 | 5 | 170M4802 | 170M4822 |
| | | 25 | 30 | 210 | 7 | 170M4803 | 170M4823 |
| | | 32 | 55 | 390 | 9 | 170M4804 | 170M4824 |
| | | 35 | 69 | 500 | 10 | 170M4805 | 170M4825 |
| | | 40 | 100 | 690 | 11 | 170M4806 | 170M4826 |
| | | 50 | 170 | 1200 | 13 | 170M4807 | 170M4827 |
| | | 63 | 280 | 2000 | 18 | 170M4808 | 170M4828 |
| | | 80 | 500 | 3500 | 22 | 170M4809 | 170M4829 |
| | | 100 | 950 | 6850 | 25 | 170M4810 | 170M4830 |
| | | 125 | 1500 | 11,500 | 33 | 170M4811 | 170M4831 |
| | | 160 | 3000 | 22,000 | 37 | 170M4812 | 170M4832 |
| | | 200 | 5600 | 40,500 | 40 | 170M4813 | 170M4833 |
| | | 250 | 10,000 | 74,000 | 48 | 170M4814 | 170M4834 |
| | 900 Vac (IEC) | 315 | 18,000 | 115,000 | 58 | 170M4815 | 170M4835 |

† Watts loss at rated current.

### Dimensions — mm

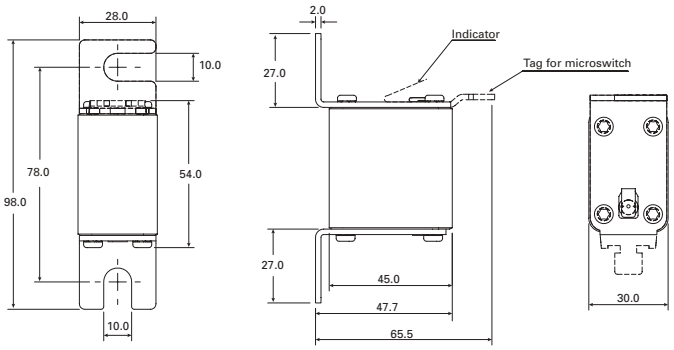


For details on electrical characteristics, contact Application Engineering and ask for Data sheet no. 170K8504

## 170M — Square Body size 1* to 3, DIN 43653

### 1000 Vac (IEC and UL), 50 to 1400 A

Square body DIN 43653 bolted tags high speed fuses, for the protection of DC common bus, DC drives, power converters/ rectifiers and reduced rated voltage starters. Available with a Type T or K indicator for a microswitch.

### Ratings

- Volts
  - 1000 Vac (IEC, 50-1250 A), 900 Vac (IEC, 1400 A)
  - 1000 Vac (UL size 2, size 3, 315-1100 A only)
  - 900 Vdc (UL, see catalog number table for specific fuses)
- Amps 50-1400 A
- IR 125 kA RMS Sym.

### Operating class aR

### Agency Information

- Designed and tested to IEC 60269 Part 4
- UL Recognized, JFHR2, E125085 (only sizes 2 and 3)
- CCC (only size 3, 315-1100 A)
- CE

### Dimensions — mm

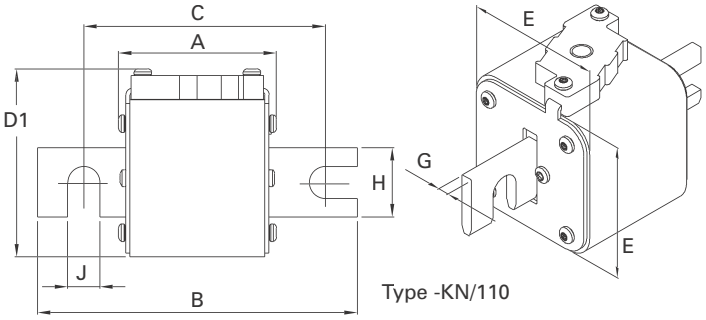


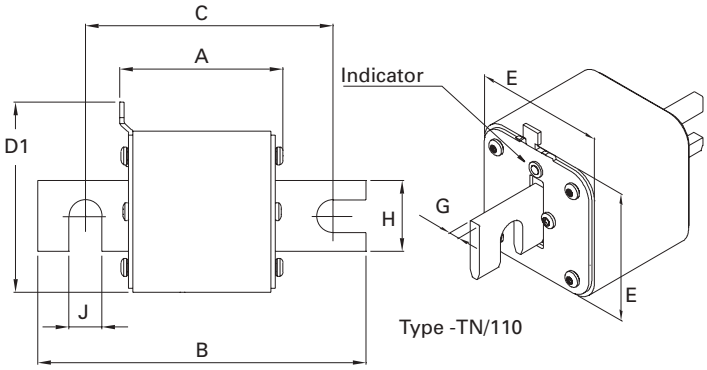


**Type -KN/110**

| Size | A | B | C | D1 (max) | E | G | H | J |
|---|---|---|---|---|---|---|---|---|
| 1*KN/110 | 80 | 138 | 108 | 61 | 43 | 6 | 22 | 11 |
| 1KN/110 | 80 | 138 | 108 | 69 | 51 | 6 | 25 | 11 |
| 2KN/110 | 80 | 138 | 108 | 77 | 59 | 6 | 25 | 11 |
| 3KN/110 | 81 | 139 | 108 | 92 | 74 | 6 | 30 | 11 |

**Type -TN/110**

| Size | A | B | C | D1 (max) | E | G | H | J |
|---|---|---|---|---|---|---|---|---|
| 1*TN/110 | 80 | 138 | 108 | 61 | 43 | 6 | 22 | 11 |
| 1TN/110 | 80 | 138 | 108 | 69 | 51 | 6 | 25 | 11 |
| 2TN/110 | 80 | 138 | 108 | 75 | 59 | 6 | 25 | 11 |
| 3TN/110 | 81 | 139 | 108 | 90 | 74 | 6 | 30 | 11 |

For details on electrical characteristics, contact Application Engineering and ask for data sheets:170K8564 (Size 1*), 170K8566 (Size 1), 170K8568 (Size 2), 170K8570 (Size 3)

## 170M — Square Body size 1* to 3, DIN 43653

### 1000 Vac (IEC and UL), 50 to 1400 A

| Fuse size | Rated voltage | Rated current (amps) | I²t (A²s) Pre-arcing | I²t (A²s) Clearing at rated voltage | Watts loss (W)† | Catalog no. -KN/110 Type K indicator for microswitch | Catalog no. -TN/110 Type T indicator for microswitch |
|---|---|---|---|---|---|---|---|
| 1* | 1000 Vac (IEC) | 50 | 135 | 815 | 20 | 170M3965 | 170M3981 |
| | | 63 | 215 | 1300 | 25 | 170M3966 | 170M3982 |
| | | 80 | 460 | 2750 | 30 | 170M3967 | 170M3983 |
| | | 100 | 860 | 5100 | 35 | 170M3968 | 170M3984 |
| | | 125 | 1450 | 8600 | 40 | 170M3969 | 170M3985 |
| | | 160 | 2850 | 17,500 | 45 | 170M3970 | 170M3986 |
| | | 200 | 4950 | 29,500 | 50 | 170M3971 | 170M3987 |
| | | 250 | 9550 | 57,000 | 55 | 170M3972 | 170M3988 |
| | | 315 | 21,500 | 130,000 | 65 | 170M3973 | 170M3989 |
| | | 350 | 29,000 | 175,000 | 70 | 170M3974 | 170M3990 |
| | | 400 | 42,000 | 250,000 | 75 | 170M3975 | 170M3991 |
| 1 | 1000 Vac (IEC) | 160 | 2200 | 13,500 | 40 | 170M4965 | 170M4980 |
| | | 200 | 4150 | 24,500 | 45 | 170M4966 | 170M4981 |
| | | 250 | 7750 | 46,000 | 52 | 170M4967 | 170M4982 |
| | | 315 | 16,500 | 98,500 | 60 | 170M4968 | 170M4983 |
| | | 350 | 21,500 | 130,000 | 65 | 170M4969 | 170M4984 |
| | | 400 | 31,000 | 185,000 | 70 | 170M4970 | 170M4985 |
| | | 450 | 44,500 | 265,000 | 80 | 170M4971 | 170M4986 |
| | | 500 | 63,000 | 375,000 | 85 | 170M4972 | 170M4987 |
| | | 550 | 84,500 | 500,000 | 90 | 170M4973 | 170M4988 |
| | | 630 | 125,000 | 755,000 | 98 | 170M4974 | 170M4989 |
| 2 | 1000 Vac (IEC and UL) | 250 | 6750 | 40,000 | 65 | 170M5966 | 170M5981 |
| | | 315 | 13,500 | 81,500 | 75 | 170M5967 | 170M5982 |
| | | 350 | 16,500 | 99,000 | 80 | 170M5968 | 170M5983 |
| | | 400 | 26,000 | 155,000 | 85 | 170M5969 | 170M5984 |
| | | 450 | 35,500 | 210,000 | 90 | 170M5970 | 170M5985 |
| | | 500 | 49,500 | 295,000 | 95 | 170M5971 | 170M5986 |
| | | 550 | 66,000 | 390,000 | 100 | 170M5972 | 170M5987 |
| | | 630 | 93,500 | 555,000 | 110 | 170M5973 | 170M5988 |
| | | 700 | 130,000 | 770,000 | 115 | 170M5974 | 170M5989 |
| | | 800 | 195,000 | 1,200,000 | 125 | 170M5975 | 170M5990 |
| 3 | 1000 Vac (IEC and UL) | 315 | 9200 | 54,500 | 90 | 170M8614 | 170M8629†† |
| | | 350 | 13,000 | 77,500 | 95 | 170M8615 | 170M8630†† |
| | | 400 | 19,000 | 115,000 | 105 | 170M8616 | 170M8631†† |
| | | 450 | 27,000 | 160,000 | 107 | 170M8617 | 170M8632†† |
| | | 500 | 37,500 | 225,000 | 110 | 170M8618 | 170M8633†† |
| | | 550 | 52,000 | 310,000 | 115 | 170M8619 | 170M8634†† |
| | | 630 | 82,500 | 490,000 | 120 | 170M8620 | 170M8635†† |
| | | 700 | 115,000 | 700,000 | 125 | 170M8621 | 170M8636†† |
| | | 800 | 170,000 | 1,050,000 | 135 | 170M8622 | 170M8637†† |
| | | 900 | 250,000 | 1,500,000 | 145 | 170M8623 | 170M8638†† |
| | | 1000 | 340,000 | 2,050,000 | 150 | 170M8624 | 170M8639†† |
| | | 1100 | 460,000 | 2,750,000 | 155 | 170M8625 | 170M8640†† |
| | 1000 Vac (IEC) | 1250 | 575,000 | 3,400,000 | 175 | 170M8626 | 170M8641 |
| | 900 Vac (IEC) | 1400 | 795,000 | 4,200,000 | 185 | 170M8627 | 170M8642 |

† Watts loss at rated current.
††DC voltage rated at 900 Vdc, UL Recognized, File E125085.

For details on electrical characteristics, contact Application Engineering and ask for data sheets:170K8564 (Size 1*), 170K8566 (Size 1), 170K8568 (Size 2), 170K8570 (Size 3)

## 170M — Square Body size 1* to 3, DIN 43653

### 1250 Vac (IEC), 1300 Vac (UL), 50 to 1400 A

Square body DIN 43653 bolted tags high speed fuses, for the protection of DC common bus, DC drives, power converters/ rectifiers and reduced rated voltage starters.

### Ratings

- Volts
  - 1100 to 1300 Vac (see catalog number table)
  - 900 and 1000 Vdc (UL, see catalog number table for specific fuses)
- Amps 50-1400 A
- IR 100 kA RMS Sym.

### Operating class aR

### Agency information

- Designed and tested to IEC 60269 Part 4
- UL Recognized, JFHR2*, E125085
- CSA Class 53787, File 1422-30*
- CE

* Consult your Bussmann series product representative for status.

### Dimensions — mm

1mm = 0.0394"

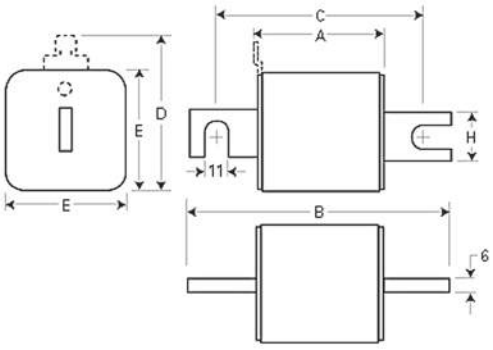


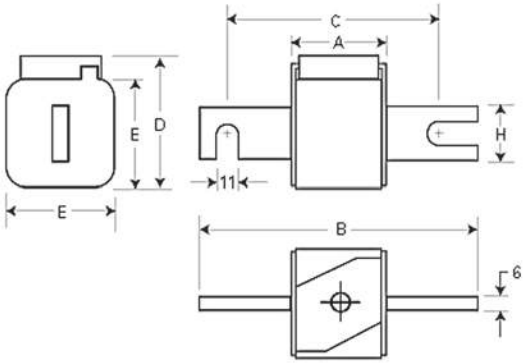


**Type-/110-TN/110**

| Size | A | B | C | D[1] | E | H | K |
|---|---|---|---|---|---|---|---|
| 1* | 80 | 138 | 108 | 58 | 45 | 20 | 11 |
| 1 | 80 | 138 | 108 | 66 | 53 | 25 | 11 |
| 2 | 80 | 138 | 108 | 75 | 61 | 25 | 11 |
| 3 | 81 | 139 | 108 | 90 | 76 | 30 | 11 |

1 Clip on microswitch valid for -TN/110 fuses.

**Type-KN/110**

| Size | A | B | C | D | E | H | K |
|---|---|---|---|---|---|---|---|
| 1* | 80 | 138 | 108 | 60 | 45 | 20 | 11 |
| 1 | 80 | 138 | 108 | 69 | 53 | 25 | 11 |
| 2 | 80 | 138 | 108 | 77 | 61 | 25 | 11 |
| 3 | 81 | 139 | 108 | 92 | 76 | 30 | 11 |

For details on electrical characteristics, contact Application Engineering and ask for data sheets:170K6630 (Size 1*), 170K6632 (Size 1), 170K6634 (Size 2), 170K6636 (Size 3)

## 170M — Square Body size 1* to 3, DIN 43653, 170M

### 1250 Vac (IEC), 1300 Vac (UL), 50 to 1400 A

| Fuse size | Rated voltage | Rated current (amps) | I²t (A²s) Pre-arcing | I²t (A²s) Clearing at 1000 Vac | I²t (A²s) Clearing at 1250 Vac | Watts loss (W)† | Catalog no. -/110 with indicator | Catalog no. -TN/110 Type T indicator for microswitch | Catalog no. -KN/110 Type K indicator for microswitch |
|---|---|---|---|---|---|---|---|---|---|
| 1* | 1250 Vac (IEC) 1300 Vac (UL) | 50 | 135 | 815 | 1100 | 15 | 170M3138 | 170M3188 | 170M3238 |
| | | 63 | 215 | 1300 | 1750 | 20 | 170M3139 | 170M3189 | 170M3239 |
| | | 80 | 420 | 2500 | 3350 | 25 | 170M3140 | 170M3190 | 170M3240 |
| | | 100 | 750 | 4450 | 5950 | 30 | 170M3141 | 170M3191 | 170M3241 |
| | | 125 | 1450 | 9000 | 11,500 | 35 | 170M3142 | 170M3192 | 170M3242 |
| | | 160 | 2600 | 16,000 | 21,000 | 40 | 170M3143 | 170M3193 | 170M3243 |
| | | 200 | 5150 | 31,000 | 41,000 | 45 | 170M3144 | 170M3194 | 170M3244 |
| | | 250 | 9200 | 54,500 | 73,000 | 55 | 170M3145 | 170M3195 | 170M3245 |
| | | 315 | 18,500 | 115,000 | 150,000 | 60 | 170M3146 | 170M3196 | 170M3246 |
| | | 350 | 27,000 | 165,000 | 220,000 | 65 | 170M3147 | 170M3197 | 170M3247 |
| | | 400 | 53,000 | 265,000 | 335,000 | 70 | 170M3148 | 170M3198 | 170M3248 |
| 1 | 1250 Vac (IEC) 1300 Vac (UL) | 160 | 1900 | 11,500 | 15,500 | 45 | 170M4138†† | 170M4188†† | 170M4238†† |
| | | 200 | 3800 | 22,500 | 30,000 | 50 | 170M4139†† | 170M4189†† | 170M4239†† |
| | | 250 | 7750 | 46,000 | 61,500 | 60 | 170M4140†† | 170M4190†† | 170M4240†† |
| | | 315 | 15,000 | 90,000 | 120,000 | 65 | 170M4141†† | 170M4191†† | 170M4241†† |
| | | 350 | 20,000 | 125,000 | 165,000 | 70 | 170M4142†† | 170M4192†† | 170M4242†† |
| | | 400 | 29,500 | 175,000 | 235,000 | 75 | 170M4143†† | 170M4193†† | 170M4243†† |
| | | 450 | 42,000 | 250,000 | 335,000 | 80 | 170M4144†† | 170M4194†† | 170M4244†† |
| | | 500 | 69,500 | 340,000 | 435,000 | 85 | 170M4145 | 170M4195 | 170M4245 |
| | | 550 | 95,000 | 465,000 | 590,000 | 95 | 170M4146 | 170M4196 | 170M4246 |
| | 1100 Vac (IEC) | 630 | 130,000 | 660,000 | N/A | 100 | 170M4147[1] | 170M4197[1] | 170M4247[1] |
| 2 | 1250 Vac (IEC) 1300 Vac (UL) | 250 | 6500 | 38,500 | 51,500 | 65 | 170M5138 | 170M5188 | 170M5238 |
| | | 280 | 9350 | 55,500 | 74,500 | 70 | 170M5139 | 170M5189 | 170M5239 |
| | | 315 | 13,000 | 77,500 | 105,000 | 75 | 170M5140 | 170M5190 | 170M5240 |
| | | 350 | 16,500 | 97,500 | 135,000 | 80 | 170M5141 | 170M5191 | 170M5241 |
| | | 400 | 23,000 | 140,000 | 180,000 | 85 | 170M5142 | 170M5192 | 170M5242 |
| | | 450 | 34,000 | 205,000 | 270,000 | 90 | 170M5143 | 170M5193 | 170M5243 |
| | | 500 | 48,000 | 285,000 | 380,000 | 95 | 170M5144 | 170M5194 | 170M5244 |
| | | 550 | 62,000 | 370,000 | 495,000 | 100 | 170M5145 | 170M5195 | 170M5245 |
| | | 630 | 115,000 | 575,000 | 730,000 | 120 | 170M5146†† | 170M5196†† | 170M5246 |
| | | 700 | 160,000 | 795,000 | 1,050,000 | 125 | 170M5147†† | 170M5197†† | 170M5247 |
| | | 800 | 245,000 | 1,200,000 | 1,550,000 | 130 | 170M5148†† | 170M5198†† | 170M5248 |
| | 1100 Vac (IEC/UL) | 900 | 360,000 | 1,750,000 | N/A | 135 | 170M5149†† | 170M5199†† | 170M5249†† |
| | | 1000 | 480,000 | 2,350,000 | N/A | 145 | 170M5150†† | 170M5200†† | 170M5250†† |
| 3 | 1300 Vac (UL) | 315 | 9500 | 58,000 | 77,500 | 85 | 170M6138†† | 170M6188†† | 170M6238†† |
| | | 350 | 13,500 | 81,500 | 110,000 | 90 | 170M6139†† | 170M6189†† | 170M6239†† |
| | | 400 | 19,500 | 120,000 | 160,000 | 95 | 170M6140†† | 170M6190†† | 170M6240†† |
| | | 450 | 31,000 | 185,000 | 245,000 | 100 | 170M6141†† | 170M6191†† | 170M6241†† |
| | | 500 | 39,000 | 235,000 | 310,000 | 105 | 170M6142†† | 170M6192†† | 170M6242†† |
| | | 550 | 55,000 | 325,000 | 435,000 | 110 | 170M6143†† | 170M6193†† | 170M6243†† |
| | | 630 | 83,500 | 495,000 | 665,000 | 115 | 170M6144†† | 170M6194†† | 170M6244†† |
| | | 700 | 115,000 | 705,000 | 940,000 | 120 | 170M6145†† | 170M6195†† | 170M6245†† |
| | | 800 | 205,000 | 995,000 | 1,300,000 | 125 | 170M6146††† | 170M6196††† | 170M6246[1] |
| | | 900 | 305,000 | 1,500,000 | 1,900,000 | 130 | 170M6147††† | 170M6197††† | 170M6247[1] |
| | | 1000 | 450,000 | 2,150,000 | 2,750,000 | 135 | 170M6148††† | 170M6198††† | 170M6248[1] |
| | | 1100 | 575,000 | 2,800,000 | 3,600,000 | 160 | 170M6149††† | 170M6199††† | 170M6249[1] |
| | 1100 Vac (IEC) | 1250 | 810,000 | 3,950,000 | N/A | 170 | 170M6150[1],†† | 170M6200[1] | 170M6250[1] |
| | | 1400 | 1,250,000 | 6,000,000 | N/A | 175 | 170M6151[1],†† | 170M6201[1] | 170M6251[1] |

† Watts loss at rated current.
†† DC voltage rated at 900 Vdc, UL Recognized, File E125085.
††† DC voltage rated at 1000 Vdc, UL Recognized, File E125085.
1 Not UL Recognized.

For details on electrical characteristics, contact Application Engineering and ask for data sheets:170K6630 (Size 1*), 170K6632 (Size 1), 170K6634 (Size 2), 170K6636 (Size 3)

## 170M — Square Body size 00 to 3, DIN 43620, full range (gR)

### 690 Vac (IEC), 10 to 800 A

Square body DIN 43653 blade high speed fuses. Full range protection fuses provide both overload and short-circuit protection. Fuses come with Type T indicator for a microswitch.

### Ratings

- Volts 690 Vac (IEC)
- Amps 10-800 A
- IR 200 kA RMS Sym.

### Operating class gR

### Agency information

- Designed and tested to IEC 60269 Part 4
- CE

### Dimensions — mm

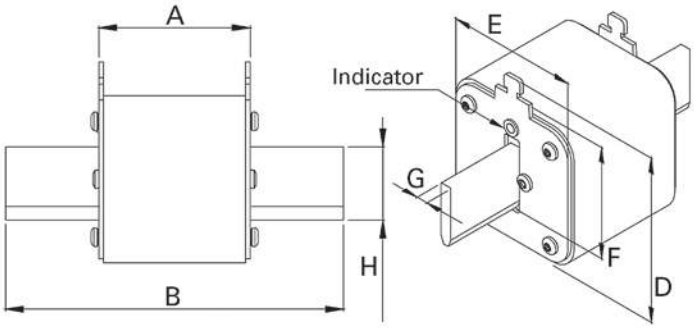


| Size | A | B | D (max) | E (max) | F | G | H (min) |
|---|---|---|---|---|---|---|---|
| 00 | 49 | 78.5 | 60 | 30 | 35 | 6 | 15 |
| 1 | 68 | 135 | 66 | 52 | 40 | 6 | 20 |
| 2 | 68 | 150 | 74 | 60 | 48 | 6 | 25 |
| 3 | 68 | 150 | 89 | 75 | 60 | 6 | 32 |

For details on electrical characteristics, contact Application Engineering and ask for data sheets:170K6412 (Size 00), 170K6416 (Size 1), 170K6418 (Size 2), 170K6420 (Size 3)

## 170M — Square Body size 00 to 3, DIN 43620, full range (gR)

### 690 Vac (IEC), 10 to 800 A

| Fuse size | Rated voltage | Rated current (amps)[1] | I²t (A²s) Pre-arcing | I²t (A²s) Clearing at 690 Vac | Watts loss (W)† | Catalog no. - Type T indicator for microswitch |
|---|---|---|---|---|---|---|
| 00 | 690 Vac (IEC) | 10 | 3.8 | 20 | 3.5 | 170M2691 |
| | | 16 | 7.2 | 38 | 5.5 | 170M2692 |
| | | 20 | 13.0 | 70 | 6.0 | 170M2693 |
| | | 25 | 24.0 | 125 | 8.0 | 170M2694 |
| | | 32 | 53.0 | 275 | 9.0 | 170M2695 |
| | | 40 | 95.0 | 490 | 10.0 | 170M2696 |
| | | 50 | 185.0 | 1000 | 11.0 | 170M2697 |
| | | 63 | 345.0 | 1800 | 14.0 | 170M2698 |
| | | 80 | 695.0 | 3600 | 16.0 | 170M2699 |
| | | 100 | 1250.0 | 6650 | 19.0 | 170M2700 |
| | | 125 | 2300.0 | 12,000 | 23.0 | 170M2701 |
| | | 160 | 4350.0 | 22,500 | 29.0 | 170M2702 |
| 1 | 690 Vac (IEC) | 50 | 135.0 | 705 | 12.0 | 170M4176 |
| | | 63 | 245.0 | 1300 | 15.0 | 170M4177 |
| | | 80 | 500.0 | 2600 | 17.0 | 170M4178 |
| | | 100 | 950.0 | 4850 | 20.0 | 170M4179 |
| | | 125 | 1850.0 | 9500 | 23.0 | 170M4180 |
| | | 160 | 3450.0 | 18,000 | 28.0 | 170M4181 |
| | | 200 | 6750.0 | 34,500 | 31.0 | 170M4182 |
| | | 250 | 13,500.0 | 70,500 | 35.0 | 170M4183 |
| | | 315 | 26,000.0 | 135,000 | 41.0 | 170M4184 |
| | | 350 | 34,000.0 | 175,000 | 45.0 | 170M4185 |
| | | 400 | 48,500.0 | 250,000 | 48.0 | 170M4186 |
| 2 | 690 Vac (IEC) | 200 | 5650.0 | 29,000 | 33.0 | 170M5881 |
| | | 250 | 10,000.0 | 52,500 | 40.0 | 170M5882 |
| | | 315 | 19,500.0 | 105,000 | 46.0 | 170M5883 |
| | | 350 | 26,000.0 | 135,000 | 50.0 | 170M5884 |
| | | 400 | 39,500.0 | 205,000 | 53.0 | 170M5885 |
| | | 450 | 55,500.0 | 290,000 | 59.0 | 170M5886 |
| | | 500 | 73,000.0 | 375,000 | 66.0 | 170M5887 |
| | | 550 | 100,000.0 | 515,000 | 70.0 | 170M5888 |
| | | 630 | 150,000.0 | 770,000 | 79.0 | 170M5889 |
| 3 | 690 Vac (IEC) | 350 | 23,000.0 | 120,000 | 55.0 | 170M6080 |
| | | 400 | 34,000.0 | 175,000 | 59.0 | 170M6081 |
| | | 450 | 48,500.0 | 250,000 | 62.0 | 170M6082 |
| | | 500 | 64,000.0 | 330,000 | 67.0 | 170M6083 |
| | | 550 | 84,500.0 | 435,000 | 70.0 | 170M6084 |
| | | 630 | 125,000.0 | 645,000 | 85.0 | 170M6085 |
| | | 700 | 160,000.0 | 840,000 | 93.0 | 170M6086 |
| | | 800 | 245,000.0 | 1,300,000 | 99.0 | 170M6087 |

† Watts loss at rated current.

1 The RMS Amp rating of this fuses range is given with open fuse blocks connected to copper conductors according to IEC 60269, Part 1, table 10. When used in enclosed fuse blocks/disconnects, derating factors have to be observed. Please contact Eaton's Bussmann Division for application assistance bulehighspeedtechnical@eaton.com.

For details on electrical characteristics, contact Application Engineering and ask for data sheets:170K6412 (Size 00), 170K6416 (Size 1), 170K6418 (Size 2), 170K6420 (Size 3)

# 170M — Square Body size 000 to 3, DIN 43620, dual indicator fuses

**690 Vac (IEC), 700 Vac (UL), 10 to 1600 A**

Square body DIN 43620 blade high speed fuses with dual indicator system: one indicator in the fuse body and another one in the metallic end plate. Interchangeable with existing high speed DIN 43620 fuses for the protection of UPS, soft starters, solid state relays, variable speed drives, rectifiers and inverters.

## Ratings

- Volts
  - 690 Vac (IEC)
  - 700 Vac (UL)
- Amps 10-1600 A
- IR 200 kA RMS Sym.

## Operating class

- gR (size 000, 10-63 A)
- aR (others)

## Agency information

- Designed and tested to IEC 60269 Part 4
- UL Recognized, JFHR2, E125085
- CSA Class 1422-30, (53787) with the exception of catalog number 170M4867D
- CE

## Dimensions — mm

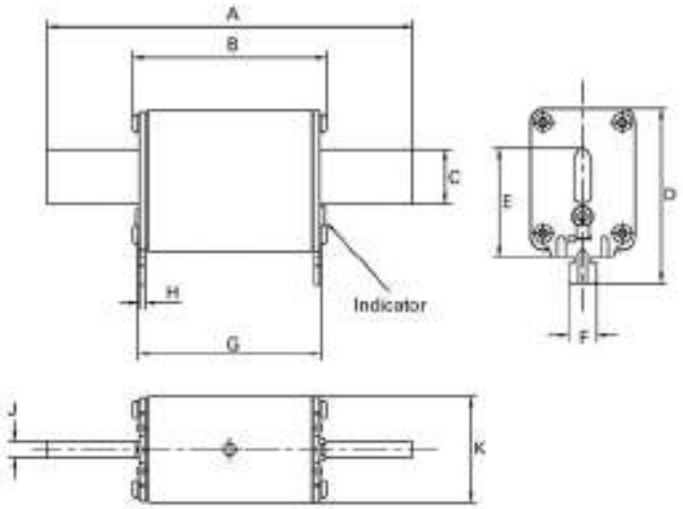


| Size | A | B | C | D | E | F | G | H | J | K |
|---|---|---|---|---|---|---|---|---|---|---|
| 000 | 78.5 | 53.0 | 15.0 | 52 | 35 | 10 | 49.7 | 1.5 | 6 | 20.5 |
| 00 | 78.5 | 53.0 | 15.0 | 59 | 35 | 10 | 49.7 | 2.0 | 6 | 30.0 |
| 1 | 135.0 | 71.4 | 20.0 | 64 | 40 | 10 | 67.5 | 2.0 | 6 | 40.0 |
| 2 | 150.0 | 71.4 | 25.1 | 72 | 48 | 10 | 67.5 | 2.0 | 6 | 54.0 |
| 3 | 150.0 | 72.4 | 32.0 | 87 | 60 | 10 | 68.5 | 2.5 | 6 | 71.0 |

For details on electrical characteristics, contact Application Engineering and ask for data sheets:170K6386 (Size 000 and 00), 170K6388 (Size 1), 170K6390 (Size 2), 170K6392 (Size 3)

## 170M — Square Body size 000 to 3, DIN 43620, dual indicator fuses

### 690 Vac (IEC), 700 Vac (UL), 10 to 1600 A

| Fuse size | Rated voltage | Rated current (amps) | Max permissible load current | I²t (A²s) Pre-arcing | I²t (A²s) Clearing at 690 Vac | Watts loss (W)[3] | Catalog no. |
|---|---|---|---|---|---|---|---|
| 000 | 690 Vac (IEC) 700 Vac (UL) | 10 | 10 | 4 | 27 | 2.5 | 170M1558D |
| | | 16 | 16 | 7 | 51 | 4 | 170M1559D |
| | | 20 | 20 | 11.5 | 82.5 | 5 | 170M1560D |
| | | 25 | 25 | 19 | 140 | 6 | 170M1561D |
| | | 32 | 32 | 40 | 285 | 7 | 170M1562D |
| | | 40 | 40 | 65 | 490 | 8.5 | 170M1563D |
| | | 50 | 50 | 115 | 815 | 9.5 | 170M1564D |
| | | 63 | 63 | 215 | 1550 | 11.5 | 170M1565D |
| | | 80 | 80 | 380 | 2700 | 15 | 170M1566D |
| | | 100 | 100 | 695 | 4950 | 16.5 | 170M1567D |
| | | 125 | 125 | 1180 | 8250 | 21.5 | 170M1568D |
| | | 160 | 160 | 2300 | 16,500 | 25 | 170M1569D |
| | | 200 | 200 | 4350 | 31,000 | 29.5 | 170M1570D |
| | | 250 | 250 | 7900 | 56,000 | 35.5 | 170M1571D |
| 00 | 690 Vac (IEC) /700 Vac (UL) | 315 | 315 | 12,000 | 84,500 | 45 | 170M1572D |
| 1 | 690 Vac (IEC) 700 Vac (UL) | 40 | 25 | 40 | 285 | 4 | 170M3808D |
| | | 50 | 30 | 78 | 550 | 4.5 | 170M3809D |
| | | 63 | 38 | 120 | 850 | 6.5 | 170M3810D |
| | | 80 | 50 | 185 | 1350 | 8.5 | 170M3811D |
| | | 100 | 60 | 360 | 2600 | 10 | 170M3812D |
| | | 125 | 75 | 550 | 3900 | 11 | 170M3813D |
| | | 160 | 95 | 1150 | 8250 | 12 | 170M3814D |
| | | 200 | 120 | 2300 | 16,500 | 12.5 | 170M3815D |
| | | 250 | 150 | 4350 | 31,000 | 16 | 170M3816D |
| | | 315 | 190 | 7300 | 52,000 | 20 | 170M3817D |
| | | 350 | 210 | 10,000 | 73,000 | 21.5 | 170M3818D |
| | | 400 | 240 | 16,000 | 115,000 | 23 | 170M3819D |
| | | 450 | 270 | 21,500 | 155,000 | 26.5 | 170M4863D |
| | | 500 | 300 | 27,000 | 190,000 | 28.5 | 170M4864D |
| | | 550 | 330 | 33,500 | 240,000 | 33 | 170M4865D |
| | | 630 | 380 | 48,500 | 345,000 | 37.5 | 170M4866D |
| | | 700 | 420 | 69,500 | 495,000 | 39 | 170M4867D[1] |
| 2 | 690 Vac (IEC) 700 Vac (UL) | 400 | 240 | 11,000 | 79,000 | 29 | 170M5808D |
| | | 450 | 270 | 16,000 | 115,000 | 32 | 170M5809D |
| | | 500 | 300 | 21,500 | 155,000 | 34 | 170M5810D |
| | | 550 | 330 | 29,000 | 215,000 | 36 | 170M5811D |
| | | 630 | 380 | 41,000 | 295,000 | 42 | 170M5812D |
| | | 700 | 420 | 60,500 | 430,000 | 43 | 170M5813D |
| | | 800 | 480 | 86,000 | 610,000 | 48 | 170M5814D |
| | | 900 | 540 | 125,000 | 895,000 | 52 | 170M5820D |
| | | 1000 | 600 | 180,000 | 1,300,000 | 53 | 170M5816D |
| | | 1100 | 660 | 245,000 | 1,750,000 | 56 | 170M5817D |
| 3 | 690 Vac (IEC) 700 Vac (UL) | 500 | 300 | 14,000 | 99,500 | 43 | 170M6808D |
| | | 550 | 330 | 19,500 | 140,000 | 44 | 170M6809D |
| | | 630 | 380 | 31,000 | 220,000 | 45 | 170M6810D |
| | | 700 | 420 | 45,000 | 320,000 | 46 | 170M6811D |
| | | 800 | 480 | 69,500 | 490,000 | 48 | 170M6812D |
| | | 900 | 540 | 100,000 | 720,000 | 50 | 170M6813D |
| | | 1000 | 600 | 140,000 | 985,000 | 56 | 170M6814D |
| | | 1100 | 660 | 190,000 | 1,400,000 | 57 | 170M6892D |
| | | 1250 | 750 | 300,000 | 2,150,000 | 61 | 170M8554D |
| | | 1400 | 840 | 380,000 | 2,700,000 | 70 | 170M8555D |
| | | 1500 | 900 | 470,000 | 3,350,000 | 72 | 170M8556D |
| | | 1600 | 960 | 585,000 | 4,150,000 | 74 | 170M8557D |

1 170M4867D is not UL Recognized.
3 Given at maximum load rated current, please refer to data sheets for further details.

For details on electrical characteristics, contact Application Engineering and ask for data sheets:170K6386 (Size 000 and 00), 170K6388 (Size 1), 170K6390 (Size 2), 170K6392 (Size 3)

# 170M — Square Body size 00, DIN 43620

## 1000 Vac (IEC and UL), 20 to 225 A

Square body DIN 43620 blade style high speed fuses for the protection of DC common bus, DC drives, power converters/rectifiers and reduced rated voltage starters. Fuses come with Type T indicator for microswitches.

### Ratings

- Volts
  - 1000 Vac (IEC and UL)
  - 900 Vac (200 and 225 A)
- Amps 20-225 A
- IR 125 kA RMS Sym.

### Operating class aR

### Agency information

- Designed and tested to IEC 60269 Part 4
- UL Recognized (20-160 A)
- CSA (20-160 A)
- CE

| Fuse size | Rated voltage | Rated current (amps) | I²t (A²s) Pre-arcing | I²t (A²s) Clearing at 1000 Vac | Watts loss (W)† | Catalog no. with Type T indicator for microswitch |
|---|---|---|---|---|---|---|
| 00 | 1000 Vac (IEC/UL) | 20 | 15 | 110 | 8.5 | 170M2673 |
| | | 25 | 28.5 | 210 | 9.5 | 170M2674 |
| | | 32 | 53 | 390 | 11 | 170M2675 |
| | | 35 | 69 | 500 | 12 | 170M2676 |
| | | 40 | 105 | 760 | 13 | 170M2677 |
| | | 50 | 215 | 1550 | 14 | 170M2678 |
| | | 63 | 380 | 2750 | 16 | 170M2679 |
| | | 80 | 815 | 5900 | 18 | 170M2680 |
| | | 100 | 1550 | 11,500 | 21 | 170M2681 |
| | | 125 | 3000 | 22,000 | 23 | 170M2682 |
| | | 160 | 6250 | 45,000 | 26 | 170M2683 |
| 00 | 900 Vac (IEC) | 200 | 12,000 | 86,500 | 31 | 170M2684 |
| | | 225 | 18,000 | 115,000 | 33 | 170M2685 |

† Watts loss at rated current.

### Dimensions — mm

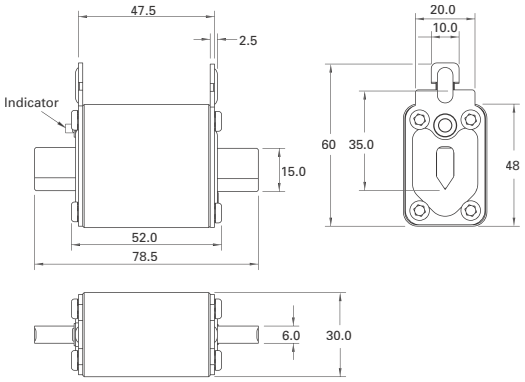


For details on electrical characteristics, contact Application Engineering and ask for Data sheet no. 170K8506

## 170M — Square Body size 1* to 3, French style

### 690 Vac (IEC), 700 Vac (UL), 40 to 1600 A

Square body French style high speed fuses for the protection of DC common bus, DC drives, power converters/rectifiers and reduced rated voltage starters. Available with Type T or K indicators for microswitches.

### Ratings

- Volts
  - 690 Vac (IEC)
  - 700 Vac (UL)
- Amps 40-1600 A
- IR 200 kA RMS Sym.

### Operating class aR

### Agency information

- Designed and tested to IEC 60269 Part 4
- UL Recognized, JFHR2, E125085
- CSA Class 1422-30, (53787) on sizes (1, 2, 3) only
- CCC (please consult bulehighspeedtechnical@eaton.com for status)
- CE

### Dimensions — mm

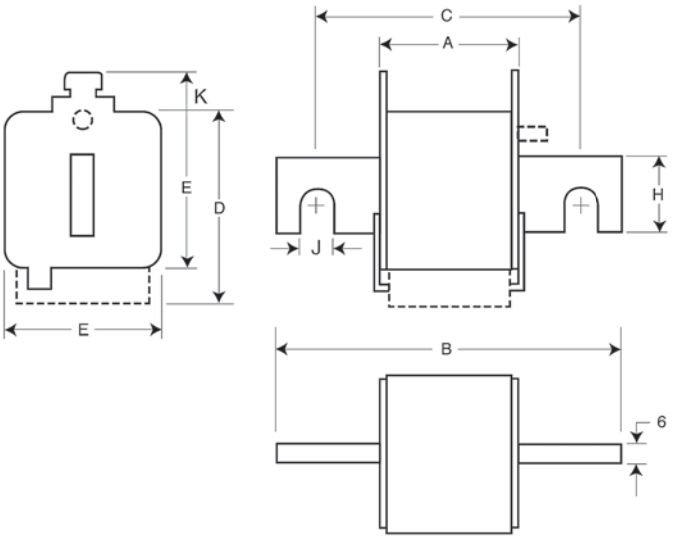


### Type -E/-, -EKN/-

| Size | A | B | C | D | E | H | J | K |
|---|---|---|---|---|---|---|---|---|
| 1* | 50 | 102 | 76 | 59 | 45 | 18 | 9 | 13 |
| 1 | 50 | 111 | 86 | 69 | 53 | 25 | 11 | 11 |
| 2 | 50 | 126 | 91 | 77 | 61 | 30 | 13 | 12 |
| 3 | 51 | 126 | 91 | 92 | 76 | 36 | 13 | 13 |

For details on electrical characteristics, contact Application Engineering and ask for data sheets:170K6314 (Size 1*), 170K6316 (Size 1), 170K6318 (Size 2), 170K6320 (Size 3)

## 170M —Square Body size 1* to 3, French style

### 690 Vac (IEC), 700 Vac (UL), 40 to 1600 A

| Fuse size | Rated voltage | Rated current (amps) | I²t (A²s) Pre-arcing | I²t (A²s) Clearing at 660 Vac | Watts loss (W)† | Catalog no. -E/- Type T indicator for microswitch | Catalog no. -EKN/- Type K indicator for microswitch |
|---|---|---|---|---|---|---|---|
| 1* | 690 Vac (IEC) 700 Vac (UL) | 40 | 40 | 270 | 9 | 170M3308 | 170M3358 |
| | | 50 | 77 | 515 | 11 | 170M3309 | 170M3359 |
| | | 63 | 115 | 770 | 14 | 170M3310 | 170M3360 |
| | | 80 | 185 | 1250 | 18 | 170M3311 | 170M3361 |
| | | 100 | 360 | 2450 | 21 | 170M3312 | 170M3362 |
| | | 125 | 550 | 3700 | 26 | 170M3313 | 170M3363 |
| | | 160 | 1100 | 7500 | 30 | 170M3314 | 170M3364 |
| | | 200 | 2200 | 15,000 | 35 | 170M3315 | 170M3365 |
| | | 250 | 4200 | 28,500 | 40 | 170M3316 | 170M3366 |
| | | 315 | 7000 | 46,500 | 50 | 170M3317 | 170M3367 |
| | | 350 | 10,000 | 68,500 | 55 | 170M3318 | 170M3368 |
| | | 400 | 15,000 | 105,000 | 60 | 170M3319 | 170M3369 |
| | | 450 | 21,000 | 140,000 | 65 | 170M3320 | 170M3370 |
| | | 500 | 27,000 | 180,000 | 70 | 170M3321 | 170M3371 |
| 1 | 690 Vac (IEC) 700 Vac (UL) | 200 | 1650 | 11,500 | 45 | 170M4308 | 170M4358 |
| | | 250 | 3100 | 21,000 | 55 | 170M4309 | 170M4359 |
| | | 315 | 6200 | 42,000 | 58 | 170M4310 | 170M4360 |
| | | 350 | 8500 | 59,000 | 60 | 170M4311 | 170M4361 |
| | | 400 | 13,500 | 91,500 | 65 | 170M4312 | 170M4362 |
| | | 450 | 17,000 | 120,000 | 70 | 170M4313 | 170M4363 |
| | | 500 | 25,000 | 170,000 | 72 | 170M4314 | 170M4364 |
| | | 550 | 34,000 | 230,000 | 75 | 170M4315 | 170M4365 |
| | | 630 | 52,000 | 350,000 | 80 | 170M4316 | 170M4366 |
| | | 700 | 69,500 | 465,000 | 85 | 170M4317 | 170M4367 |
| | | 800 | 105,000 | 725,000 | 95 | 170M4318 | 170M4368 |
| 2 | 690 Vac (IEC) 700 Vac (UL) | 400 | 11,000 | 74,000 | 65 | 170M5308 | 170M5358 |
| | | 450 | 15,500 | 105,000 | 70 | 170M5309 | 170M5359 |
| | | 500 | 21,500 | 145,000 | 75 | 170M5310 | 170M5360 |
| | | 550 | 28,000 | 190,000 | 80 | 170M5311 | 170M5361 |
| | | 630 | 41,000 | 275,000 | 90 | 170M5312 | 170M5362 |
| | | 700 | 60,500 | 405,000 | 95 | 170M5313 | 170M5363 |
| | | 800 | 86,000 | 575,000 | 105 | 170M5314 | 170M5364 |
| | | 900 | 125,000 | 840,000 | 110 | 170M5315 | 170M5365 |
| | | 1000 | 180,000 | 1,250,000 | 115 | 170M5316 | 170M5366 |
| 3 | 690 Vac (IEC) 700 Vac (UL) | 500 | 14,000 | 95,000 | 95 | 170M6308 | 170M6358 |
| | | 550 | 19,500 | 135,000 | 100 | 170M6309 | 170M6359 |
| | | 630 | 31,000 | 210,000 | 105 | 170M6310 | 170M6360 |
| | | 700 | 44,500 | 300,000 | 110 | 170M6311 | 170M6361 |
| | | 800 | 69,500 | 465,000 | 115 | 170M6312 | 170M6362 |
| | | 900 | 100,000 | 670,000 | 120 | 170M6313 | 170M6363 |
| | | 1000 | 140,000 | 945,000 | 125 | 170M6314 | 170M6364 |
| | | 1100 | 190,000 | 1,300,000 | 130 | 170M6315 | 170M6365 |
| | | 1250 | 290,000 | 1,950,000 | 140 | 170M6316 | 170M6366 |
| | | 1400 | 370,000 | 2,450,000 | 155 | 170M6317 | 170M6367 |
| | | 1500 | 460,000 | 3,100,000 | 160 | 170M6318 | 170M6368 |
| | | 1600 | 580,000 | 3,900,000 | 160 | 170M6319 | 170M6369 |

† Watts loss at rated current.

For details on electrical characteristics, contact Application Engineering and ask for data sheets:170K6314 (Size 1*), 170K6316 (Size 1), 170K6318 (Size 2), 170K6320 (Size 3)

## 170M — Square Body size 1* to 3, US style

### 690 Vac (IEC), 700 Vac (UL), 40 to 2000 A

Square body US style bolted tags high speed fuses for the protection of DC common bus, DC drives, power converters/ rectifiers and reduced rated voltage starters. Available with Type K indicator for a microswitch.

### Ratings

- Volts
  - 500 to 700 Vac (see catalog number table)
  - 750 Vdc (UL, see catalog number table for specific fuses)
- Amps 40-2000 A
- IR 200 kA RMS Sym.

### Operating class aR

### Agency information

- Designed and tested to IEC 60269 Part 4
- UL Recognized, JFHR2*, E125085
- CSA Class 53787, File 1422-30*
- CCC*
- CE

* Consult your Bussmann series product representative for status.

### Dimensions — mm

1mm = 0.0394"

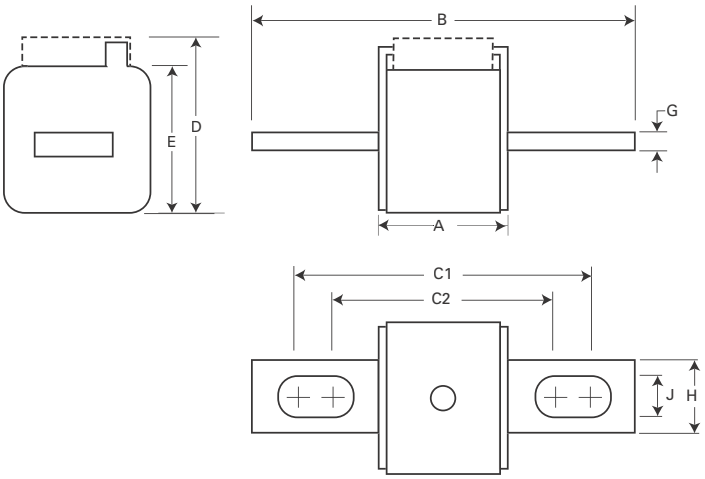


**Type -FU/-, -FKE/-, FU/115-, -FKE/115**

| Size | A | B | B1 | C1 | C1† | C2 | C2† | D | E | G | H | J |
|---|---|---|---|---|---|---|---|---|---|---|---|---|
| 1* | 50 | 110 | 148 | 85 | 123 | 72 | 110 | 59 | 45 | 6 | 20 | 10 |
| 1 | 50 | 136 | 157 | 104 | 126 | 78 | 100 | 69 | 53 | 6 | 25 | 14 |
| 2 | 50 | 135 | 159 | 105 | 125 | 78 | 99 | 77 | 61 | 6 | 25 | 14 |
| 3 | 51 | 135 | 155 | 106 | 125 | 77 | 97 | 92 | 76 | 6 | 36 | 16 |

† Valid for fuss types -FU/115 and -FKE/115.

For details on electrical characteristics, contact Application Engineering and ask for data sheets:170K6314 (Size 1*), 170K6316 (Size 1), 170K6318 (Size 2), 170K6320 (Size 3)

## 170M — Square Body size 1* to 3, US style

### 690 Vac (IEC), 700 Vac (UL), 40 to 2000 A

| Fuse size | Rated voltage | Rated current (amps) | I²t (A²s) Pre-arcing | I²t (A²s) Clearing at 660 Vac | Watts loss (W)† | Catalog no. -FU/- without indicator | Catalog no. -FKE/- Type K indicator for microswitch | Catalog no. -FU/115 without indicator | Catalog no. -FKE/115 Type K indicator for microswitch |
|---|---|---|---|---|---|---|---|---|---|
| 1* | 690 Vac (IEC) 700 Vac (UL) | 40 | 40 | 270 | 9 | 170M3608 | 170M3658 | 170M3708 | 170M3758 |
| | | 50 | 70 | 515 | 11 | 170M3609 | 170M3659 | 170M3709 | 170M3759 |
| | | 63 | 115 | 770 | 14 | 170M3610 | 170M3660 | 170M3710 | 170M3760 |
| | | 80 | 185 | 1250 | 18 | 170M3611 | 170M3661 | 170M3711 | 170M3761 |
| | | 100 | 360 | 2450 | 21 | 170M3612 | 170M3662 | 170M3712 | 170M3762 |
| | | 125 | 550 | 3700 | 26 | 170M3613 | 170M3663 | 170M3713 | 170M3763 |
| | | 160 | 1100 | 7500 | 30 | 170M3614 | 170M3664 | 170M3714 | 170M3764 |
| | | 200 | 2200 | 15,000 | 35 | 170M3615 | 170M3665 | 170M3715 | 170M3765 |
| | | 250 | 4200 | 28,500 | 40 | 170M3616 | 170M3666 | 170M3716 | 170M3766 |
| | | 315 | 7000 | 46,500 | 50 | 170M3617 | 170M3667 | 170M3717 | 170M3767 |
| | | 350 | 10,000 | 68,500 | 55 | 170M3618 | 170M3668 | 170M3718 | 170M3768 |
| | | 400 | 15,000 | 105,000 | 60 | 170M3619 | 170M3669 | 170M3719 | 170M3769 |
| | | 450 | 21,000 | 140,000 | 65 | 170M3620 | 170M3670 | 170M3720 | 170M3770 |
| | | 500 | 27,000 | 180,000 | 70 | 170M3621 | 170M3671 | 170M3721 | 170M3771 |
| | | 550 | 34,000 | 230,000 | 75 | 170M3622 | 170M3672 | 170M3722 | 170M3772 |
| | | 630 | 48,500 | 325,000 | 80 | 170M3623 | 170M3673 | 170M3723 | 170M3773 |
| 1 | 690 Vac (IEC) 700 Vac (UL) | 200 | 1650 | 11,500 | 45 | 170M4608 | 170M4658 | 170M4708 | 170M4758 |
| | | 250 | 3100 | 21,000 | 55 | 170M4609 | 170M4659 | 170M4709 | 170M4759 |
| | | 315 | 6200 | 42,000 | 58 | 170M4610 | 170M4660 | 170M4710 | 170M4760 |
| | | 350 | 8500 | 59,000 | 60 | 170M4611 | 170M4661 | 170M4711 | 170M4761 |
| | | 400 | 13,500 | 91,500 | 65 | 170M4612 | 170M4662 | 170M4712 | 170M4762 |
| | | 450 | 17,000 | 120,000 | 70 | 170M4613 | 170M4663 | 170M4713 | 170M4763 |
| | | 500 | 25,000 | 170,000 | 72 | 170M4614 | 170M4664 | 170M4714 | 170M4764 |
| | | 550 | 34,000 | 230,000 | 75 | 170M4615 | 170M4665 | 170M4715 | 170M4765 |
| | | 630 | 52,000 | 350,000 | 80 | 170M4616 | 170M4666 | 170M4716 | 170M4766 |
| | | 700 | 69,500 | 465,000 | 85 | 170M4617 | 170M4667 | 170M4717 | 170M4767 |
| | | 800 | 105,000 | 725,000 | 95 | 170M4618 | 170M4668 | 170M4718 | 170M4768 |
| | 550 Vac (IEC) | 900 | 155,000 | 850,000 | 100 | 170M4619 | 170M4669 | 170M4719 | 170M4769 |
| 2 | 690 Vac (IEC) 700 Vac (UL) | 400 | 11,000 | 74,000 | 65 | 170M5608 | 170M5658 | 170M5708 | 170M5758 |
| | | 450 | 15,500 | 105,000 | 70 | 170M5609 | 170M5659 | 170M5709 | 170M5759 |
| | | 500 | 21,500 | 145,000 | 75 | 170M5610 | 170M5660 | 170M5710 | 170M5760 |
| | | 550 | 28,000 | 190,000 | 80 | 170M5611 | 170M5661 | 170M5711 | 170M5761 |
| | | 630 | 41,000 | 275,000 | 90 | 170M5612 | 170M5662 | 170M5712 | 170M5762 |
| | | 700 | 60,500 | 405,000 | 95 | 170M5613 | 170M5663 | 170M5713 | 170M5763 |
| | | 800 | 86,000 | 575,000 | 105 | 170M5614 | 170M5664 | 170M5714 | 170M5764 |
| | | 900 | 125,000 | 840,000 | 110 | 170M5615 | 170M5665 | 170M5715 | 170M5765 |
| | | 1000 | 180,000 | 1,250,000 | 115 | 170M5616 | 170M5666 | 170M5716 | 170M5766 |
| | 600 Vac (IEC) 700 Vac (UL) | 1100 | 245,000 | 1,600,000 | 120 | 170M5617 | 170M5667 | 170M5717 | 170M5767 |
| | | 1250 | 365,000 | 2,400,000 | 130 | 170M5618 | 170M5668 | 170M5718 | 170M5768 |
| 3 | 690 Vac (IEC) 700 Vac (UL) | 500 | 14,000 | 95,000 | 95 | 170M6608 | 170M6658 | 170M6708 | 170M6758 |
| | | 550 | 19,500 | 135,000 | 100 | 170M6609 | 170M6659 | 170M6709 | 170M6759 |
| | | 630 | 31,000 | 210,000 | 105 | 170M6610 | 170M6660 | 170M6710 | 170M6760 |
| | | 700 | 44,500 | 300,000 | 110 | 170M6611 | 170M6661 | 170M6711 | 170M6761 |
| | | 800 | 69,500 | 465,000 | 115 | 170M6612 | 170M6662 | 170M6712 | 170M6762 |
| | | 900 | 100,000 | 670,000 | 120 | 170M6613 | 170M6663 | 170M6713 | 170M6763 |
| | | 1000 | 140,000 | 945,000 | 125 | 170M6614 | 170M6664 | 170M6714 | 170M6764 |
| | | 1100 | 190,000 | 1,300,000 | 130 | 170M6615 | 170M6665 | 170M6715 | 170M6765 |
| | | 1250 | 290,000 | 1,950,000 | 140 | 170M6616 | 170M6666 | 170M6716 | 170M6766 |
| | | 1400 | 370,000 | 2,450,000 | 155 | 170M6617 | 170M6667 | 170M6717 | 170M6767 |
| | | 1500 | 460,000 | 3,100,000 | 160 | 170M6618 | 170M6668 | 170M6718 | 170M6768 |
| | | 1600 | 580,000 | 3,900,000 | 160 | 170M6619 | 170M6669 | 170M6719 | 170M6769 |
| | 600 Vac (IEC) 500 Vac (UL) | 1800 | 880,000 | 5,250,000 | 165 | 170M6620†† | 170M6670[1] | 170M6720†† | 170M6770 |
| | 550 Vac (IEC) 500 Vac (UL) | 2000 | 1,150,000 | 6,350,000 | 175 | 170M6621 | 170M6671[2] | 170M6721 | 170M6771 |

† Watts loss at rated current.
††DC voltage rated at 750 Vdc, UL Recognized, File E125085.
1 170M6670 600 Vac (IEC)/550 Vac.
2 170M6671 550 Vac (IEC and UL).

For details on electrical characteristics, contact Application Engineering and ask for data sheets:170K6314 (Size 1*), 170K6316 (Size 1), 170K6318 (Size 2), 170K6320 (Size 3)

## 170M — Square Body size 1* to 3, US style

### 1000 Vac (IEC), 50 to 1400 A

Square body US style bolted tags high speed fuses for the protection of DC common bus, DC drives, power converters/ rectifiers and reduced rated voltage starters. Fuses come with Type K indicator for microswitches.

### Ratings

- Volts 1000 Vac (IEC) (1400 A 900 Vac)
- Amps 50-1400 A
- IR 125 kA RMS Sym.

### Operating class aR

### Agency information

- Designed and tested to IEC 60269 Part 4
- UL Recognized, JFHR2, E125085 for size 2 and 3 (315-1100 A)
- CSA Class 53787, File 1422-30 for size 2 and 3 (315-1100 A)
- CCC approval for size 2 only
- CE

### Dimensions — mm

1mm = 0.0394"

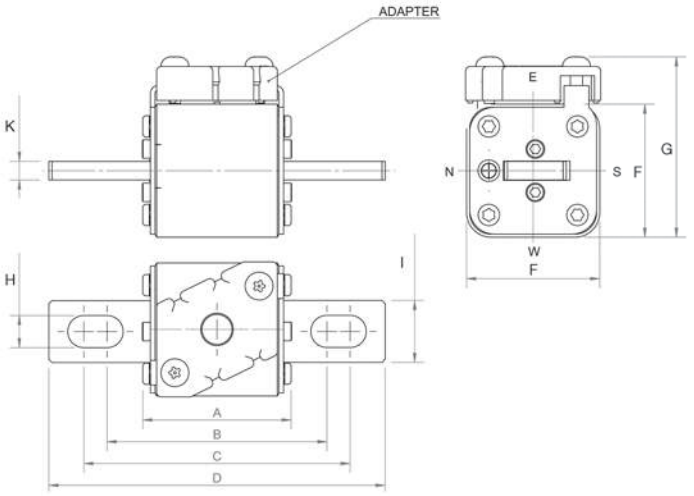


| Size | A | B | C | D | F | G | H | I | K |
|---|---|---|---|---|---|---|---|---|---|
| 1*FKE/115 | 74 | 101.0 | 130.0 | 156 | 43 | 60 | 10.4 | 20 | 6 |
| 1FKE/115 | 76 | 102.0 | 128.0 | 160 | 51 | 68 | 14.3 | 25 | 6 |
| 2FKE/115 | 76 | 101.1 | 127.5 | 160 | 59 | 76 | 14.4 | 25 | 6 |
| 3FKE/115 | 76 | 101.1 | 127.5 | 158 | 74 | 91 | 16.0 | 36 | 6 |

For details on electrical characteristics, contact Application Engineering and ask for data sheets:170K8564 (Size 1*), 170K8566 (Size 1), 170K8568 (Size 2), 170K8570 (Size 3)

## 170M — Square Body size 1* to 3, US style, 170M

### 1000 Vac (IEC), 50 to 1400 A

| Fuse size | Rated voltage | Rated current (amps) | I²t (A²s) Pre-arcing | I²t (A²s) Clearing at 1000 Vac | Watts loss (W)† | Catalog no. -FKE/115 Type K indicator for microswitch |
|---|---|---|---|---|---|---|
| 1* | 1000 Vac (IEC) | 50 | 135 | 815 | 20 | 170M3531 |
| | | 63 | 215 | 1300 | 25 | 170M3532 |
| | | 80 | 460 | 2750 | 30 | 170M3533 |
| | | 100 | 860 | 5100 | 35 | 170M3534 |
| | | 125 | 1450 | 8600 | 40 | 170M3535 |
| | | 160 | 2850 | 17,500 | 45 | 170M3536 |
| | | 200 | 4950 | 29,500 | 50 | 170M3537 |
| | | 250 | 9550 | 57,000 | 55 | 170M3538 |
| | | 315 | 21,500 | 130,000 | 65 | 170M3539 |
| | | 350 | 29,000 | 175,000 | 70 | 170M3540 |
| | | 400 | 42,000 | 250,000 | 75 | 170M3541 |
| 1 | 1000 Vac (IEC) | 160 | 2200 | 13,500 | 40 | 170M4531 |
| | | 200 | 4150 | 24,500 | 50 | 170M4532 |
| | | 250 | 7750 | 46,000 | 55 | 170M4533 |
| | | 315 | 16,500 | 98,500 | 65 | 170M4534 |
| | | 350 | 21,500 | 130,000 | 70 | 170M4535 |
| | | 400 | 31,000 | 185,000 | 75 | 170M4536 |
| | | 450 | 44,500 | 265,000 | 80 | 170M4537 |
| | | 500 | 63,000 | 375,000 | 85 | 170M4538 |
| | | 550 | 84,500 | 500,000 | 90 | 170M4539 |
| | | 630 | 125,000 | 755,000 | 98 | 170M4540 |
| 2 | 1000 Vac (IEC/UL) | 250 | 6750 | 40,000 | 65 | 170M5531 |
| | | 315 | 13,500 | 81,500 | 75 | 170M5532 |
| | | 350 | 16,500 | 99,000 | 80 | 170M5533 |
| | | 400 | 26,000 | 155,000 | 85 | 170M5534 |
| | | 450 | 35,500 | 210,000 | 90 | 170M5535 |
| | | 500 | 49,500 | 295,000 | 95 | 170M5536 |
| | | 550 | 66,000 | 390,000 | 100 | 170M5337 |
| | | 630 | 93,500 | 555,000 | 110 | 170M5538 |
| | | 700 | 130,000 | 770,000 | 115 | 170M5539 |
| | | 800 | 195,000 | 1,200,000 | 125 | 170M5540 |
| 3 | 1000 Vac (IEC/UL) | 315 | 9200 | 54,500 | 90 | 170M8531 |
| | | 350 | 13,000 | 77,500 | 95 | 170M8532 |
| | | 400 | 19,000 | 115,000 | 105 | 170M8533 |
| | | 450 | 27,000 | 160,000 | 107 | 170M8534 |
| | | 500 | 37,500 | 225,000 | 110 | 170M8535 |
| | | 550 | 52,000 | 310,000 | 115 | 170M8536 |
| | | 630 | 82,500 | 490,000 | 120 | 170M8537 |
| | | 700 | 115,000 | 700,000 | 125 | 170M8538 |
| | | 800 | 170,000 | 1,050,000 | 135 | 170M8539 |
| | | 900 | 250,000 | 1,500,000 | 145 | 170M8540 |
| | | 1000 | 340,000 | 2,050,000 | 150 | 170M8541 |
| | | 1100 | 460,000 | 2,750,000 | 155 | 170M8542 |
| | 1000 Vac (IEC) | 1250 | 575,000 | 3,400,000 | 175 | 170M8543 |
| | 900 Vac (IEC) | 1400 | 795,000 | 4,200,000 | 185 | 170M8544 |

† Watts loss at rated current.

For details on electrical characteristics, contact Application Engineering and ask for data sheets:170K8564 (Size 1*), 170K8566 (Size 1), 170K8568 (Size 2), 170K8570 (Size 3)

## 170M — Square Body size 1* to 3, US style

### 1250 Vac (IEC), 1300 Vac (UL), 50 to 1400 A

Square body US style bolted tags high speed fuses for the protection of DC common bus, DC drives, power converters/ rectifiers and reduced rated voltage starters. Available with Type K indicator for microswitches.

### Ratings

- Volts
  - 1250 Vac (IEC)
  - 1300 Vac (UL)
  - 900 Vdc (UL, see catalog number table for specific fuses)
- Amps 50-1400 A
- IR 100 kA RMS Sym.

### Operating class aR

### Agency information

- Designed and tested to IEC 60269 Part 4
- UL Recognized†
- CSA†
- CCC†
- CE

† Consult your Bussmann series product representative for status.

### Dimensions — mm

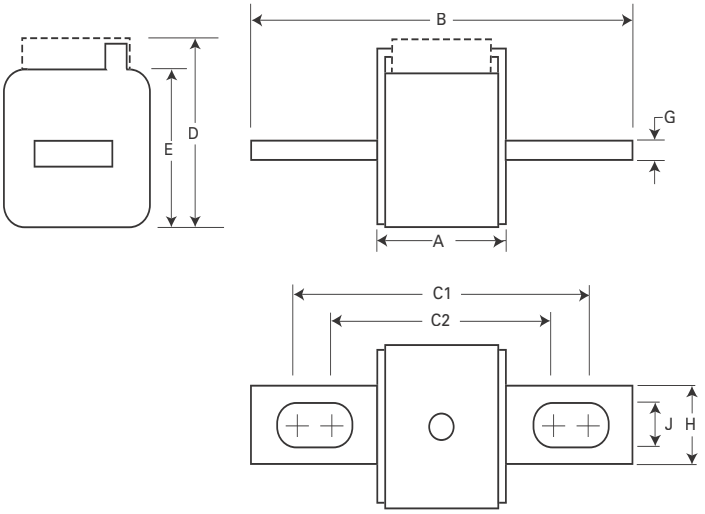


### Type-FU/115,-FKE/115

| Size | A | B | C1 | C2 | D | E | G | H | J |
|---|---|---|---|---|---|---|---|---|---|
| 1* | 74 | 156 | 130 | 101 | 59 | 45 | 6 | 20 | 10 |
| 1 | 76 | 160 | 127 | 102 | 69 | 53 | 6 | 25 | 14 |
| 2 | 76 | 160 | 127 | 102 | 77 | 61 | 6 | 25 | 14 |
| 3 | 76 | 159 | 128 | 101 | 92 | 76 | 6 | 36 | 16 |

For details on electrical characteristics, contact Application Engineering and ask for data sheets:170K6630 (Size 1*), 170K6632 (Size 1), 170K6634 (Size 2), 170K6636 (Size 3)

## 170M — Square Body size 1* to 3, US style

### 1250 Vac (IEC), 1300 Vac (UL), 50 to 1400 A

| Fuse size | Rated voltage | Rated current (amps) | I²t (A²s) Pre-arcing | I²t (A²s) Clearing at 1000 Vac | I²t (A²s) Clearing at 1250 Vac | Watts loss (W)† | Catalog no. -FU/115 without indicator | Catalog no. -FKE/115 Type K indicator for microswitch |
|---|---|---|---|---|---|---|---|---|
| 1* | 1250 Vac (IEC) 1300 Vac (UL) | 50 | 135 | 815 | 1100 | 15 | 170M3688†† | 170M3738†† |
| | | 63 | 215 | 1300 | 1750 | 20 | 170M3689†† | 170M3739†† |
| | | 80 | 420 | 2500 | 3350 | 25 | 170M3690†† | 170M3740†† |
| | | 100 | 750 | 4450 | 5950 | 30 | 170M3691†† | 170M3741†† |
| | | 125 | 1450 | 9000 | 11,500 | 35 | 170M3692†† | 170M3742†† |
| | | 160 | 2600 | 16,000 | 21,000 | 40 | 170M3693†† | 170M3743†† |
| | | 200 | 5150 | 31,000 | 41,000 | 45 | 170M3694†† | 170M3744†† |
| | | 250 | 9200 | 54,500 | 73,000 | 55 | 170M3695†† | 170M3745†† |
| | | 315 | 18,500 | 115,000 | 150,000 | 60 | 170M3696†† | 170M3746†† |
| | | 350 | 27,000 | 165,000 | 220,000 | 65 | 170M3697†† | 170M3747†† |
| 1 | 1250 Vac (IEC) 1300 Vac (UL) | 160 | 1900 | 11,500 | 15,500 | 45 | 170M4688 | 170M4738 |
| | | 200 | 3800 | 22,500 | 30,000 | 50 | 170M4689 | 170M4739 |
| | | 250 | 7750 | 46,000 | 61,500 | 60 | 170M4690 | 170M4740 |
| | | 315 | 15,000 | 90,000 | 120,000 | 65 | 170M4691 | 170M4741 |
| | | 350 | 20,000 | 125,000 | 165,000 | 70 | 170M4692 | 170M4742 |
| | | 400 | 29,500 | 175,000 | 235,000 | 75 | 170M4693 | 170M4743 |
| | | 450 | 42,000 | 250,000 | 335,000 | 80 | 170M4694 | 170M4744 |
| | 1100 Vac IEC | 500 | 69,500 | 340,000 | N/A | 85 | 170M4695 | 170M4745 |
| | | 550 | 95,000 | 465,000 | N/A | 95 | 170M4696 | 170M4746 |
| | 1000 Vac IEC | 630 | 130,000 | 660,000 | N/A | 100 | 170M4697 | 170M4747 |
| 2 | 1250 Vac (IEC) 1300 Vac (UL) | 250 | 6500 | 38,500 | 51,500 | 65 | 170M5688 | 170M5738 |
| | | 280 | 9350 | 55,500 | 74,500 | 70 | 170M5689 | 170M5739 |
| | | 315 | 13,000 | 77,500 | 105,000 | 75 | 170M5690 | 170M5740 |
| | | 350 | 16,500 | 97,500 | 135,000 | 80 | 170M5691 | 170M5741 |
| | | 400 | 23,000 | 140,000 | 180,000 | 85 | 170M5692 | 170M5742 |
| | | 450 | 34,000 | 205,000 | 270,000 | 90 | 170M5693 | 170M5743 |
| | | 500 | 48,000 | 285,000 | 380,000 | 95 | 170M5694 | 170M5744 |
| | | 550 | 62,000 | 370,000 | 495,000 | 100 | 170M5695 | 170M5745 |
| | | 630 | 115,000 | 575,000 | 730,000 | 120 | 170M5696 | 170M5746 |
| | 1100 Vac IEC | 700 | 160,000 | 795,000 | N/A | 125 | 170M5697 | 170M5747 |
| | | 800 | 245,000 | 1,200,000 | N/A | 130 | 170M5698 | 170M5748 |
| | 1000 Vac IEC | 900 | 360,000 | 1,750,000 | N/A | 135 | 170M5699 | 170M5749 |
| | | 1000 | 480,000 | 2,350,000 | N/A | 145 | 170M5700 | 170M5750 |
| 3 | 1250 Vac (IEC) 1300 Vac (UL) | 315 | 9500 | 58,000 | 77,500 | 85 | 170M6688 | 170M6738 |
| | | 350 | 13,500 | 81,500 | 110,000 | 90 | 170M6689 | 170M6739 |
| | | 400 | 19,000 | 120,000 | 160,000 | 95 | 170M6690 | 170M6740 |
| | | 450 | 31,000 | 185,000 | 245,000 | 100 | 170M6691 | 170M6741 |
| | | 500 | 39,000 | 235,000 | 310,000 | 105 | 170M6692 | 170M6742 |
| | | 550 | 55,000 | 325,000 | 435,000 | 110 | 170M6693 | 170M6743 |
| | | 630 | 83,500 | 495,000 | 665,000 | 115 | 170M6694 | 170M6744 |
| | | 700 | 115,000 | 705,000 | 940,000 | 120 | 170M6695 | 170M6745 |
| | 1250 Vac (IEC) | 800 | 205,000 | 995,000 | 1,300,000 | 125 | 170M6696 | 170M6746 |
| | | 900 | 305,000 | 1,500,000 | 1,900,000 | 130 | 170M6697 | 170M6747 |
| | 1100 Vac (IEC) 1000 Vac (UL) | 1000 | 450,000 | 2,150,000 | N/A | 135 | 170M6698 | 170M6748 |
| | | 1100 | 575,000 | 2,800,000 | N/A | 160 | 170M6699 | 170M6749 |
| | 1000 Vac (IEC/UL) | 1250 | 810,000 | 3,950,000 | N/A | 170 | 170M6700 | 170M6750 |
| | | 1400 | 1,250,000 | 6,000,000 | N/A | 175 | 170M6701 | 170M6751 |

† Watts loss at rated current.
††DC voltage rated at 900 Vdc, UL Recognized, File E125085.

For details on electrical characteristics, contact Application Engineering and ask for data sheets:170K6630 (Size 1*), 170K6632 (Size 1), 170K6634 (Size 2), 170K6636 (Size 3)

## 170M — Square Body size 00, flush-end contact

**690 Vac, 25 to 400 A**

Square body flush-end contact high speed fuses, for the protection of DC common bus, DC drives, power converters/rectifiers and reduced rated voltage starters. Catalog numbers available with visual indicator and Type T indicator for a microswitch.

### Ratings

- Volts 690 Vac (IEC)
- Amps 25-400 A
- IR 200 kA RMS Sym.

### Operating class

- gR (25-80 A)
- aR (100-400 A)

### Agency information

- Designed and tested to IEC 60269 Part 4
- UL Recognized, JFHR2, E125085
- CSA Class 53787, File 1422-30 on size 000
- CE

| Fuse size | Rated voltage | Rated current (amps) | I²t (A²s) Pre-arcing | I²t (A²s) Clearing at 660 Vac | Watts loss (W)† | Catalog no. 00B/60 visual indicator | Catalog no. 00BTN/60 Type T indicator for microswitch |
|---|---|---|---|---|---|---|---|
| 00 | 690 Vac (IEC) | 25 | 19.0 | 130 | 6 | 170M2708 | 170M2758 |
| | | 32 | 28.5 | 195 | 7 | 170M2709 | 170M2759 |
| | | 40 | 50.0 | 360 | 9 | 170M2710 | 170M2760 |
| | | 50 | 95.0 | 640 | 10 | 170M2711 | 170M2761 |
| | | 63 | 170.0 | 1200 | 12 | 170M2712 | 170M2762 |
| | | 80 | 310.0 | 2100 | 15 | 170M2713 | 170M2763 |
| | | 100 | 620.0 | 4150 | 20 | 170M2714 | 170M2764 |
| | | 125 | 1000.0 | 6950 | 25 | 170M2715 | 170M2765 |
| | | 160 | 1900.0 | 13,000 | 30 | 170M2716 | 170M2766 |
| | | 200 | 3400.0 | 23,000 | 35 | 170M2717 | 170M2767 |
| | | 250 | 6250.0 | 42,000 | 45 | 170M2718 | 170M2768 |
| | | 315 | 10,000.0 | 68,500 | 55 | 170M2719 | 170M2769 |
| | | 350 | 13,500.0 | 91,500 | 60 | 170M2720 | 170M2770 |
| | | 400 | 18,000.0 | 125,000 | 70 | 170M2721 | 170M2771 |

† Watts loss at rated current.

### Dimensions — mm

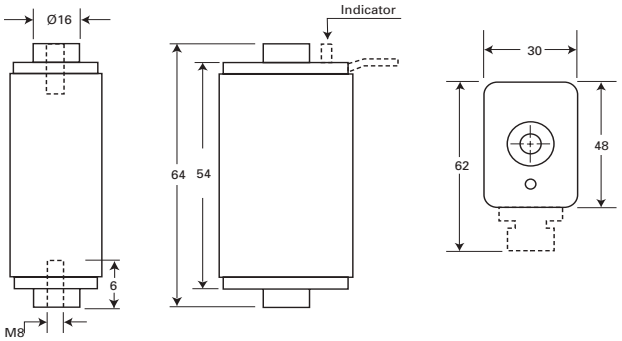


For details on electrical characteristics, contact Application Engineering and ask for Data sheet no. 170K6312

## 170M — Square Body size 1* to 3, flush-end contact

### 690 Vac (IEC), 700 Vac (UL), 40 to 2000 A

Square body flush-end contact high speed fuses, for the protection of DC common bus, DC drives, power converters/rectifiers and reduced rated voltage starters. Catalog numbers available with visual indicator and Type K indicator for a microswitch.

### Ratings

- Volts
  - 500 to 700 Vac (see catalog number table)
  - 750 Vdc (UL, see catalog number table for specific fuses)
- Amps 40-2000 A
- IR 200 kA RMS Sym.

### Operating class aR

### Agency information

- Designed and tested to IEC 60269 Part 4
- UL Recognized, JFHR2, E125085†
- CSA Class 53787, File 1422-30†
- CCC†
- CE

† Consult your Bussmann series product representative for status.

### Dimensions — mm

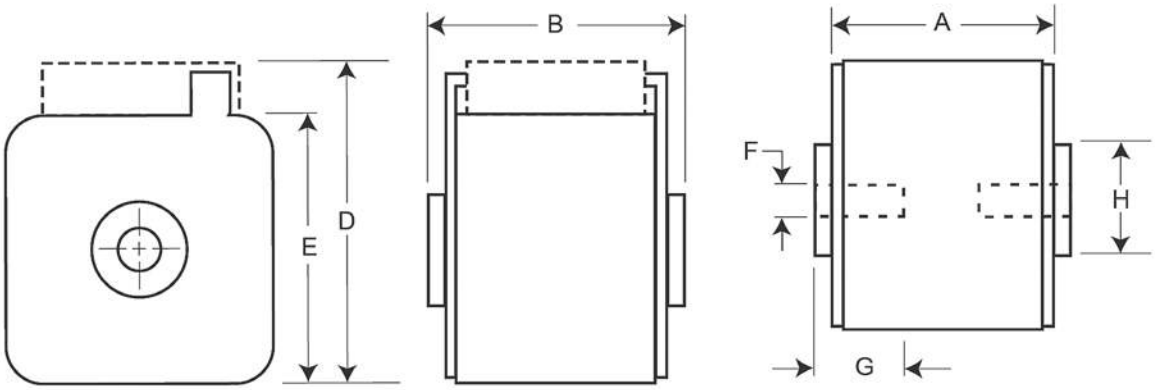


**Type -B/- , -BKN/- , -G/- , -GKN/-**

| Size | A | B | D[1] | E | F | F[2] (in) | G | H |
|---|---|---|---|---|---|---|---|---|
| 1* | 50 | 51 | 59 | 45 | M8 | 5/16-18 UNC-2B | 5 | N17 |
| 1 | 50 | 51 | 69 | 53 | M8 | 5/16-18 UNC-2B | 8 | N20 |
| 2 | 50 | 51 (400-1000 A)<br>65 (1100-1250 A) | 77 | 61 | M10 | 3/8-16 UNC-2B | 10 | N24 |
| 3 | 51 | 53 (500-1500 A)<br>65 (1600-2000 A) | 92 | 76 | M12 | 1/2-13 UNC-2B | 10 | N30 |

1 Valid for fuse Types -BKN/ and -GKN/.
2 Valid for fuse Types -G- and -GKN/.

For details on electrical characteristics, contact Application Engineering and ask for data sheets:170K6314 (Size 1*), 170K6316 (Size 1), 170K6318 (Size 2), 170K6320 (Size 3)

## 170M — Square Body size 1* to 3, flush-end contact

### 690 Vac (IEC), 700 Vac (UL), 40 to 2000 A

| Fuse size | Rated voltage | Rated current (amps) | I²t (A²s) Pre-arcing | I²t (A²s) Clearing at 660 Vac | Watts loss (W)† | Catalog no. -B/- visual indicator | Catalog no. -BKN/- Type K indicator for microswitch | Catalog no. -G/- visual indicator | Catalog no. -GKN/- Type K indicator for microswitch |
|---|---|---|---|---|---|---|---|---|---|
| 1* | 690 Vac (IEC) 700 Vac (UL) | 40 | 40 | 270 | 9 | 170M3408 | 170M3458 | 170M3508 | 170M3558 |
| | | 50 | 77 | 515 | 11 | 170M3409 | 170M3459 | 170M3509 | 170M3559 |
| | | 63 | 115 | 770 | 14 | 170M3410 | 170M3460 | 170M3510 | 170M3560 |
| | | 80 | 185 | 1250 | 18 | 170M3411 | 170M3461 | 170M3511 | 170M3561 |
| | | 100 | 360 | 2450 | 21 | 170M3412 | 170M3462 | 170M3512 | 170M3562 |
| | | 125 | 550 | 3700 | 26 | 170M3413 | 170M3463 | 170M3513 | 170M3563 |
| | | 160 | 1100 | 7500 | 30 | 170M3414 | 170M3464 | 170M3514 | 170M3564 |
| | | 200 | 2200 | 15,000 | 35 | 170M3415 | 170M3465 | 170M3515 | 170M3565 |
| | | 250 | 4200 | 28,500 | 40 | 170M3416 | 170M3466 | 170M3516 | 170M3566 |
| | | 315 | 7000 | 46,500 | 50 | 170M3417 | 170M3467 | 170M3517 | 170M3567 |
| | | 350 | 10,000 | 68,500 | 55 | 170M3418 | 170M3468 | 170M3518 | 170M3568 |
| | | 400 | 15,000 | 105,000 | 60 | 170M3419 | 170M3469 | 170M3519 | 170M3569 |
| | | 450 | 21,000 | 140,000 | 65 | 170M3420 | 170M3470 | 170M3520 | 170M3570 |
| | | 500 | 27,000 | 180,000 | 70 | 170M3421 | 170M3471 | 170M3521 | 170M3571 |
| | | 550 | 34,000 | 230,000 | 75 | 170M3422 | 170M3472 | 170M3522 | 170M3572 |
| | | 630 | 48,500 | 325,000 | 80 | 170M3423 | 170M3473 | 170M3523 | 170M3573 |
| 1 | 690 Vac (IEC) 700 Vac (UL) | 200 | 1650 | 11,500 | 45 | 170M4408 | 170M4458 | 170M4508 | 170M4558 |
| | | 250 | 3100 | 21,000 | 55 | 170M4409 | 170M4459 | 170M4509 | 170M4559 |
| | | 315 | 6200 | 42,000 | 58 | 170M4410 | 170M4460 | 170M4510 | 170M4560 |
| | | 350 | 8500 | 59,000 | 60 | 170M4411 | 170M4461 | 170M4511 | 170M4561 |
| | | 400 | 13,500 | 91,500 | 65 | 170M4412 | 170M4462 | 170M4512 | 170M4562 |
| | | 450 | 17,000 | 120,000 | 70 | 170M4413 | 170M4463 | 170M4513 | 170M4563 |
| | | 500 | 25,000 | 170,000 | 72 | 170M4414 | 170M4464 | 170M4514 | 170M4564 |
| | | 550 | 34,000 | 230,000 | 75 | 170M4415 | 170M4465 | 170M4515 | 170M4565 |
| | | 630 | 52,000 | 350,000 | 80 | 170M4416 | 170M4466 | 170M4516 | 170M4566 |
| | | 700 | 69,500 | 465,000 | 85 | 170M4417 | 170M4467 | 170M4517 | 170M4567 |
| | | 800 | 105,000 | 725,000 | 95 | 170M4418 | 170M4468 | 170M4518 | 170M4568 |
| | 550 Vac (IEC) | 900 | 155,000 | 850,000 | 100 | 170M4419 | 170M4469 | 170M4519 | 170M4569 |
| 2 | 690 Vac (IEC) 700 Vac (UL) | 400 | 11,000 | 74,000 | 65 | 170M5408 | 170M5458 | 170M5508 | 170M5558 |
| | | 450 | 15,500 | 105,000 | 70 | 170M5409 | 170M5459 | 170M5509 | 170M5559 |
| | | 500 | 21,500 | 145,000 | 75 | 170M5410 | 170M5460 | 170M5510 | 170M5560 |
| | | 550 | 28,000 | 190,000 | 80 | 170M5411 | 170M5461 | 170M5511 | 170M5561 |
| | | 630 | 41,000 | 275,000 | 90 | 170M5412 | 170M5462 | 170M5512 | 170M5562 |
| | | 700 | 60,500 | 405,000 | 95 | 170M5413 | 170M5463 | 170M5513 | 170M5563 |
| | | 800 | 86,000 | 575,000 | 105 | 170M5414 | 170M5464 | 170M5514 | 170M5564 |
| | | 900 | 125,000 | 840,000 | 110 | 170M5415 | 170M5465 | 170M5515 | 170M5565 |
| | | 1000 | 180,000 | 1,250,000 | 115 | 170M5416 | 170M5466 | 170M5516 | 170M5566 |
| | 600 Vac (IEC) 700 Vac (UL) | 1100 | 245,000 | 1,600,000 | 120 | 170M5417 | 170M5467 | 170M5517 | 170M5567 |
| | | 1250 | 365,000 | 2,400,000 | 130 | 170M5418 | 170M5468 | 170M5518 | 170M5568 |
| 3 | 690 Vac (IEC) 700 Vac (UL) | 500 | 14,000 | 95,000 | 95 | 170M6408 | 170M6458 | 170M6508 | 170M6558 |
| | | 550 | 19,500 | 135,000 | 100 | 170M6409 | 170M6459 | 170M6509 | 170M6559 |
| | | 630 | 31,000 | 210,000 | 105 | 170M6410 | 170M6460 | 170M6510 | 170M6560 |
| | | 700 | 44,500 | 300,000 | 110 | 170M6411 | 170M6461 | 170M6511 | 170M6561 |
| | | 800 | 69,500 | 465,000 | 115 | 170M6412 | 170M6462 | 170M6512 | 170M6562 |
| | | 900 | 100,000 | 670,000 | 120 | 170M6413 | 170M6463 | 170M6513 | 170M6563 |
| | | 1000 | 140,000 | 945,000 | 125 | 170M6414 | 170M6464 | 170M6514 | 170M6564 |
| | | 1100 | 190,000 | 1,300,000 | 130 | 170M6415 | 170M6465 | 170M6515 | 170M6565 |
| | | 1250 | 290,000 | 1,950,000 | 140 | 170M6416 | 170M6466 | 170M6516 | 170M6566 |
| | | 1400 | 370,000 | 2,450,000 | 155 | 170M6417 | 170M6467 | 170M6517 | 170M6567 |
| | | 1500 | 460,000 | 3,100,000 | 160 | 170M6418 | 170M6468 | 170M6518 | 170M6568 |
| | | 1600 | 580,000 | 3,900,000 | 160 | 170M6419 | 170M6469 | 170M6519 | 170M6569 |
| | 600 Vac (IEC) 500 Vac (UL) | 1800 | 880,000 | 5,250,000 | 165 | 170M6420†† | 170M6470 | 170M6520†† | 170M6570 |
| | 550 Vac (IEC) 500 Vac (UL) | 2000 | 1,150,000 | 6,350,000 | 175 | 170M6421 | 170M6471 | 170M6521 | 170M6571 |

† Watts loss at rated current.
††DC voltage rated at 750 Vdc, UL Recognized, File E125085.

For details on electrical characteristics, contact Application Engineering and ask for data sheets:170K6314 (Size 1*), 170K6316 (Size 1), 170K6318 (Size 2), 170K6320 (Size 3)

## 170M — Square Body size 1* to 3, flush-end contact

### 1000 Vac (IEC and UL), 50 to 1400 A

Square body flush-end contact high speed fuses, for the protection of DC common bus, DC drives, power converters/rectifiers and reduced rated voltage starters. Catalog numbers come with Type K indicator for use with microswitches.

### Ratings

- Volts
  - 1000 Vac (IEC, 50-1250 A)
  - 1000 Vac (UL, 250-1100 A)
  - 900 Vac (IEC, 1400 A
- Amps 50-1400 A
- IR 125 kA RMS Sym.

### Operating class aR

### Agency information

- Designed and tested to IEC 60269 Part 4
- UL Recognized, JFHR2, E125085 (only sizes 2 and 3 up to 1100 A)
- CE

### Dimensions — mm

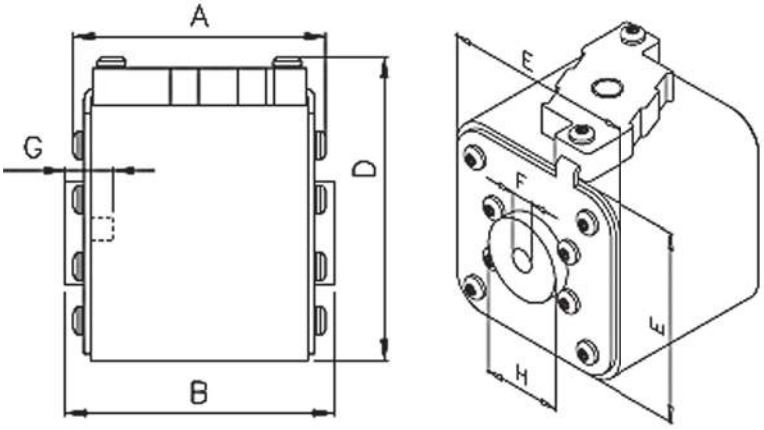


### Type -BKN/- and -GKN/-

| Size | Type | A | B | D (max) | E | F | F[1] (in) | G (min) | H |
|---|---|---|---|---|---|---|---|---|---|
| 1* | BKN/75 + GKN/75 | 72.5 | 74.0 | 61 | 43 | M8 | 5/16-18 UNC-2B | 5 | 17.5 |
| 1 | BKN/75 + GKN/75 | 73.2 | 74.0 | 69 | 52 | M8 | 5/16-18 UNC-2B | 8 | 20.0 |
| 2 | BKN/75 + GKN/75 | 73.2 | 74.4 | 77 | 59 | M10 | 3/8-16 UNC-2B | 10 | 24.5 |
| 3 | BKN/75 + GKN/75 | 73.3 | 75.4 | 92 | 74 | M12 | 1/2-13 UNC-2B | 10 | 30.0 |
| | BKN/90 + GKN/90 | 80.3 | 91.4 | 92 | 74 | M12 | 1/2-13 UNC-2B | 10 | 30.0 |

1 Valid for fuse Types -GKN/-.

For details on electrical characteristics, contact Application Engineering and ask for data sheets: 170K8564 (Size 1*), 170K8566 (Size 1), 170K8568 (Size 2), 170K8570 (Size 3)

## 170M — Square Body size 1* to 3, flush-end contact

### 1000 Vac (IEC and UL), 50 to 1400 A

| Fuse size | Rated voltage | Rated current (amps) | $I^2t$ ($A^2s$) Pre-arcing | $I^2t$ ($A^2s$) Clearing at rated voltage | Watts loss (W)† | Catalog no. -BKN/- Type K indicator for microswitch | Catalog no. -GKN/- Type K indicator for microswitch |
|---|---|---|---|---|---|---|---|
| 1* | 1000 Vac (IEC) | 50 | 135 | 815 | 20 | 170M3951 | 170M3921 |
| | | 63 | 215 | 1300 | 25 | 170M3952 | 170M3922 |
| | | 80 | 460 | 2750 | 30 | 170M3953 | 170M3923 |
| | | 100 | 860 | 5100 | 35 | 170M3954 | 170M3924 |
| | | 125 | 1450 | 8600 | 40 | 170M3955 | 170M3925 |
| | | 160 | 2850 | 17,500 | 45 | 170M3956 | 170M3926 |
| | | 200 | 4950 | 29,500 | 50 | 170M3957 | 170M3927 |
| | | 250 | 9550 | 57,000 | 55 | 170M3958 | 170M3928 |
| | | 315 | 21,500 | 130,000 | 65 | 170M3959 | 170M3929 |
| | | 350 | 29,000 | 175,000 | 70 | 170M3960 | 170M3930 |
| | | 400 | 42,000 | 250,000 | 75 | 170M3961 | 170M3931 |
| 1 | 1000 Vac IEC) | 160 | 2200 | 13,500 | 40 | 170M4951 | 170M4921 |
| | | 200 | 4150 | 24,500 | 45 | 170M4952 | 170M4922 |
| | | 250 | 7750 | 46,000 | 52 | 170M4953 | 170M4923 |
| | | 315 | 16,500 | 98,500 | 60 | 170M4954 | 170M4924 |
| | | 350 | 21,500 | 130,000 | 65 | 170M4955 | 170M4925 |
| | | 400 | 31,000 | 185,000 | 70 | 170M4956 | 170M4926 |
| | | 450 | 44,500 | 265,000 | 80 | 170M4957 | 170M4927 |
| | | 500 | 63,000 | 375,000 | 85 | 170M4958 | 170M4928 |
| | | 550 | 84,500 | 500,000 | 90 | 170M4959 | 170M4929 |
| | | 630 | 125,000 | 755,000 | 98 | 170M4960 | 170M4930 |
| 2 | 1000 Vac (IEC/UL) | 250 | 6750 | 40,000 | 65 | 170M5952 | 170M5922 |
| | | 315 | 13,500 | 81,500 | 75 | 170M5953 | 170M5923 |
| | | 350 | 16,500 | 99,000 | 80 | 170M5954 | 170M5924 |
| | | 400 | 26,000 | 155,000 | 85 | 170M5955 | 170M5925 |
| | | 450 | 35,500 | 210,000 | 90 | 170M5956 | 170M5926 |
| | | 500 | 49,500 | 295,000 | 95 | 170M5957 | 170M5927 |
| | | 550 | 66,000 | 390,000 | 100 | 170M5958 | 170M5928 |
| | | 630 | 93,500 | 555,000 | 110 | 170M5959 | 170M5929 |
| | | 700 | 130,000 | 770,000 | 115 | 170M5960 | 170M5930 |
| | | 800 | 195,000 | 1,200,000 | 125 | 170M5961 | 170M5931 |
| 3 | 1000 Vac (IEC/UL) | 315 | 9200 | 54,500 | 90 | 170M8600 | 170M8500 |
| | | 350 | 13,000 | 77,500 | 95 | 170M8601 | 170M8501 |
| | | 400 | 19,000 | 115,000 | 105 | 170M8602 | 170M8502 |
| | | 450 | 27,000 | 160,000 | 107 | 170M8603 | 170M8503 |
| | | 500 | 37,500 | 225,000 | 110 | 170M8604 | 170M8504 |
| | | 550 | 52,000 | 310,000 | 115 | 170M8605 | 170M8505 |
| | | 630 | 82,500 | 490,000 | 120 | 170M8606 | 170M8506 |
| | | 700 | 115,000 | 700,000 | 125 | 170M8607 | 170M8507 |
| | | 800 | 170,000 | 1,050,000 | 135 | 170M8608 | 170M8508 |
| | | 900 | 250,000 | 1,500,000 | 145 | 170M8609 | 170M8509 |
| | | 1000 | 340,000 | 2,050,000 | 150 | 170M8610 | 170M8510 |
| | | 1100 | 460,000 | 2,750,000 | 155 | 170M8611 | 170M8511 |
| | 1000 Vac (IEC) | 1250 | 575,000 | 3,400,000 | 175 | 170M8612[1] | 170M8512[1] |
| | 900 Vac (IEC) | 1400 | 795,000 | 4,200,000 | 185 | 170M8613[1] | 170M8513[1] |

† Watts loss at rated current.
1 Overall length is 90mm, for all other fuses the overall length is 75mm.

For details on electrical characteristics, contact Application Engineering and ask for data sheets:170K8564 (Size 1*), 170K8566 (Size 1), 170K8568 (Size 2), 170K8570 (Size 3)

## 170M — Square Body size 1* to 3, flush-end contact

### 1250 Vac (IEC), 1300 Vac (UL), 50 to 1400 A

Square body flush-end contact high speed fuses, for the protection of DC common bus, DC drives, power converters/rectifiers and reduced rated voltage starters. Catalog numbers come with Type K indicator for use with microswitches.

### Ratings

- Volts
  - 1250 Vac (IEC)
  - 1300 Vac (UL)
  - 900 and 1000 Vdc (UL, see catalog number table for specific fuses)
- Amps 50-1400 A
- IR 100 kA RMS Sym.

### Operating class aR

### Agency information

- Designed and tested to IEC 60269 Part 4
- UL Recognized, JFHR2, E125085†
- CSA Class 53787, File 1422-30†
- CE

† Consult your Bussmann series product representative status.

### Dimensions — mm

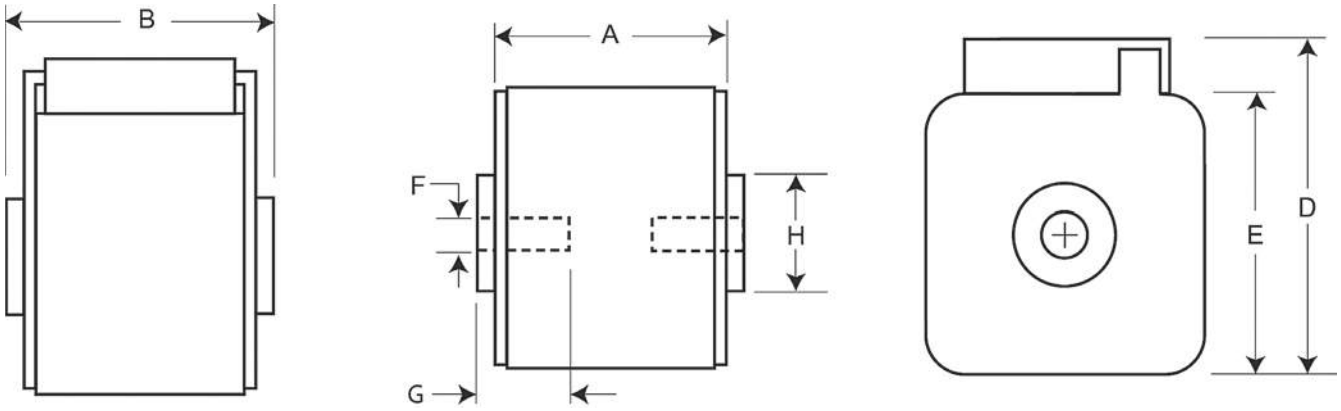


### Type -BKN/- and -GKN/-

| Size | Type | A | B | D | E | F | F[1] (in) | Min G | HØ |
|---|---|---|---|---|---|---|---|---|---|
| 1* | BKN + GKN/75 | 74 | 75 | 59 | 45 | M8 | 5/16-18 UNC-2B | 5 | 17 |
| | BKN/80 | 80 | 81 | 59 | 45 | M8 | | 5 | 17 |
| 1 | BKN + GKN/75 | 74 | 75 | 69 | 53 | M8 | | 8 | 20 |
| | BKN/80 | 80 | 81 | 69 | 53 | M8 | | 8 | 20 |
| 2 | BKN + GKN/75 | 74 | 75 | 77 | 61 | M10 | 3/8-16 UNC-2B | 10 | 24 |
| | BKN/80 | 80 | 81 | 77 | 61 | M10 | | 10 | 24 |
| | BKN + GKN/90 | 80 | 91 | 77 | 61 | M10 | | 10 | 24 |
| 3 | BKN + GKN/75 | 74 | 76 | 92 | 76 | M12 | 1/2-13 UNC-2B | 10 | 30 |
| | BKN/80 | 81 | 83 | 92 | 76 | M12 | | 10 | 30 |
| | BKN + GKN/90 | 81 | 91 | 92 | 76 | M12 | | 10 | 30 |

1 Valid for fuse Types -GKN/-.

For details on electrical characteristics, contact Application Engineering and ask for data sheets: 170K6630 (Size 1*), 170K6632 (Size 1), 170K6634 (Size 2), 170K6636 (Size 3)

## 170M — Square Body size 1* to 3, flush-end contact

### 1250 Vac (IEC), 1300 Vac (UL), 50 to 1400 A

| Fuse size | Rated voltage | Rated current (amps) | I²t (A²s) Pre-arcing | I²t (A²s) Clearing at 1000 Vac | I²t (A²s) Clearing at 1250 Vac | Watts loss (W)† | Catalog no. -BKN/75 Type K indicator for micro | Catalog no. -BKN/80 Type K indicator for micro | Catalog no. -BKN/90 Type K indicator for micro | Catalog no. -GKN/75 Type K indicator for micro | Catalog no. -GKN/90 Type K indicator for micro |
|---|---|---|---|---|---|---|---|---|---|---|---|
| 1* | 1250 Vac (IEC) 1300 Vac (UL) | 50 | 135 | 815 | 1100 | 15 | 170M3388†† | 170M3438 | — | 170M3488†† | — |
| | | 63 | 215 | 1300 | 1750 | 20 | 170M3389†† | 170M3439 | — | 170M3489†† | — |
| | | 80 | 420 | 2500 | 3350 | 25 | 170M3390†† | 170M3440 | — | 170M3490†† | — |
| | | 100 | 750 | 4450 | 5950 | 30 | 170M3391†† | 170M3441 | — | 170M3491†† | — |
| | | 125 | 1450 | 9000 | 11,500 | 35 | 170M3392†† | 170M3442 | — | 170M3492†† | — |
| | | 160 | 2600 | 16,000 | 21,000 | 40 | 170M3393†† | 170M3443 | — | 170M3493†† | — |
| | | 200 | 5150 | 31,000 | 41,000 | 45 | 170M3394†† | 170M3444 | — | 170M3494†† | — |
| | | 250 | 9200 | 54,500 | 73,000 | 55 | 170M3395†† | 170M3445 | — | 170M3495†† | — |
| | | 315 | 18,500 | 115,000 | 150,000 | 60 | 170M3396†† | 170M3446 | — | 170M3496†† | — |
| | | 350 | 27,000 | 165,000 | 220,000 | 65 | 170M3397†† | 170M3447 | — | 170M3497†† | — |
| | | 400 | 53,000 | 265,000 | 335,000 | 70 | — | 170M3448 | — | — | — |
| 1 | 1250 Vac (IEC) 1300 Vac (UL) | 160 | 1900 | 11,500 | 15,500 | 45 | 170M4388†† | 170M4438†† | — | 170M4488 | — |
| | | 200 | 3800 | 22,500 | 30,000 | 50 | 170M4389†† | 170M4439†† | — | 170M4489 | — |
| | | 250 | 7750 | 46,000 | 61,500 | 60 | 170M4390†† | 170M4440†† | — | 170M4490 | — |
| | | 315 | 15,000 | 90,000 | 120,000 | 65 | 170M4391†† | 170M4441†† | — | 170M4491 | — |
| | | 350 | 20,000 | 125,000 | 165,000 | 70 | 170M4392†† | 170M4442†† | — | 170M4492 | — |
| | | 400 | 29,500 | 175,000 | 235,000 | 75 | 170M4393†† | 170M4443†† | — | 170M4493 | — |
| | | 450 | 42,000 | 250,000 | 335,000 | 80 | 170M4394†† | 170M4444†† | — | 170M4494 | — |
| | | 500 | 69,500 | 340,000 | 435,000 | 85 | 170M4395[4] | 170M4445 | — | 170M4495[4] | — |
| | | 550 | 95,000 | 465,000 | 590,000 | 95 | 170M4396[5] | 170M4446 | — | 170M4496[5] | — |
| | | 630 | 130,000 | 660,000 | N/A | 110 | 170M4397[5] | 170M4447[4] | — | 170M4497[5] | — |
| 2 | 1250 Vac (IEC) 1300 Vac (UL) | 250 | 6500 | 38,500 | 51,500 | 65 | 170M5388 | 170M5438 | — | 170M5588 | — |
| | | 280 | 9350 | 55,500 | 74,500 | 70 | 170M5389 | 170M5439 | — | 170M5589 | — |
| | | 315 | 13,000 | 77,500 | 105,000 | 75 | 170M5390 | 170M5440 | — | 170M5590 | — |
| | | 350 | 16,500 | 97,500 | 135,000 | 80 | 170M5391 | 170M5441 | — | 170M5591 | — |
| | | 400 | 23,000 | 140,000 | 180,000 | 85 | 170M5392 | 170M5442 | — | 170M5592 | — |
| | | 450 | 34,000 | 205,000 | 270,000 | 90 | 170M5393 | 170M5443 | — | 170M5593 | — |
| | | 500 | 48,000 | 285,000 | 380,000 | 95 | 170M5394 | 170M5444 | 170M5494 | 170M5594 | 170M5644 |
| | | 550 | 62,000 | 370,000 | 495,000 | 100 | 170M5395 | 170M5445 | 170M5495 | 170M5595 | 170M5645 |
| | | 630 | 115,000 | 575,000 | 730,000 | 120 | 170M5396[4] | 170M5446 | 170M5496 | 170M5596[4] | 170M5646 |
| | | 700 | 160,000 | 795,000 | 1,050,000 | 125 | 170M5397[5] | 170M5447[1]††† | 170M5497 | 170M5597[5] | 170M5647 |
| | | 800 | 245,000 | 1,200,000 | 1,550,000 | 130 | 170M5398[5] | 170M5448[2]††† | 170M5498 | 170M5598[5] | 170M5648 |
| | | 900 | 360,000 | 1,750,000 | N/A | 135 | — | — | 170M5499[3]†† | — | 170M5649[3]†† |
| | | 1000 | 480,000 | 2,350,000 | N/A | 145 | — | — | 170M5500[3]†† | — | 170M5650[3]†† |
| 3 | 1250 Vac (IEC) 1300 Vac (UL) | 315 | 9500 | 58,000 | 77,500 | 85 | 170M6338†† | 170M6538†† | — | 170M6588 | — |
| | | 350 | 13,500 | 81,500 | 110,000 | 90 | 170M6339†† | 170M6539†† | — | 170M6589 | — |
| | | 400 | 19,500 | 120,000 | 160,000 | 95 | 170M6340†† | 170M6540†† | — | 170M6590 | — |
| | | 450 | 31,000 | 185,000 | 245,000 | 100 | 170M6341†† | 170M6541†† | — | 170M6591 | — |
| | | 500 | 39,000 | 235,000 | 310,000 | 105 | 170M6342†† | 170M6542†† | — | 170M6592 | — |
| | | 550 | 55,000 | 325,000 | 435,000 | 110 | 170M6343†† | 170M6543†† | — | 170M6593 | — |
| | | 630 | 83,500 | 495,000 | 665,000 | 115 | 170M6344†† | 170M6544†† | 170M6494†† | 170M6594 | 170M6644 |
| | | 700 | 115,000 | 705,000 | 940,000 | 120 | 170M6345 | 170M6545†† | 170M6495†† | 170M6595 | 170M6645†† |
| | | 800 | 205,000 | 995,000 | 1,300,000 | 125 | 170M6346[4] | 170M6546†† | 170M6496††† | 170M6596[4] | 170M6646††† |
| | | 900 | 305,000 | 1,500,000 | 1,900,000 | 130 | 170M6347[5] | 170M6547[1]†† | 170M6497††† | 170M6597[5] | 170M6647††† |
| | | 1000 | 450,000 | 2,150,000 | 2,750,000 | 135 | 170M6348[5] | 170M6548[1]†† | 170M6498††† | 170M6598[5] | 170M6648††† |
| | | 1100 | 575,000 | 2,800,000 | 3,600,000 | 160 | 170M6349[5] | 170M6549[2]†† | 170M6499††† | 170M6599[5] | 170M6649††† |
| | | 1250 | 810,000 | 3,950,000 | N/A | 170 | — | — | 170M6500[3]†† | — | 170M6650[4] |
| | | 1400 | 1,250,000 | 6,000,000 | N/A | 175 | — | — | 170M6501[3]†† | — | 170M6651[4] |

† Watts loss at rated current.
†† DC voltage rated at 900 Vdc, UL Recognized, File E125085.
††† DC voltage rated at 1000 Vdc, UL Recognized, File E125085.
1 Rated voltage 1100 Vac (IEC), 1000 Vac (UL).
2 Rated voltage 1000 Vac (IEC and UL).
3 Rated voltage 1100 Vac (IEC and UL).
4 Rated voltage (IEC) 1100 Vac.
5 Rated voltage (IEC) 1000 Vac.

For details on electrical characteristics, contact Application Engineering and ask for data sheets:170K6630 (Size 1*), 170K6632 (Size 1), 170K6634 (Size 2), 170K6636 (Size 3)

## 170M — Square Body size 4, flush-end contact

### 690 Vac (IEC), 700 Vac (UL), 1000 to 4000 A

Square body, flush-end contact, high speed fuses, for the protection of power rectifiers. Catalog numbers come with visual indicator or Type K indicator for use with microswitches.

### Ratings

- Volts
  - 690 Vac (IEC)/700 Vac (UL) 1000-3500 A
  - 600 Vac (IEC and UL, 4000 A)
- Amps 1000-4000 A
- IR 200 kA RMS Sym.

### Operating class aR

### Agency information

- Designed and tested to IEC 60269 Part 4
- UL Recognized, JFHR2, E125085
- CE



| Fuse size | Rated voltage | Rated current (amps) | $I^2t$ ($A^2s$) Pre-arcing | $I^2t$ ($A^2s$) Clearing at 660 Vac | Watts loss (W)† | Catalog no. -B/65 visual indicator | Catalog no. -BKN/65 Type K indicator | Catalog no. -G/65 visual indicator | Catalog no. -GKN/65 Type K indicator |
|---|---|---|---|---|---|---|---|---|---|
| 4 | 690 Vac (IEC) 700 Vac (UL) | 1000 | 76,000 | 505,000 | 175 | 170M7058 | 170M7078 | 170M7098 | 170M7118 |
| | | 1250 | 145,000 | 965,000 | 195 | 170M7059 | 170M7079 | 170M7099 | 170M7119 |
| | | 1400 | 205,000 | 1,400,000 | 205 | 170M7060 | 170M7080 | 170M7100 | 170M7120 |
| | | 1600 | 305,000 | 2,050,000 | 220 | 170M7061 | 170M7081 | 170M7101 | 170M7121 |
| | | 2000 | 600,000 | 3,950,000 | 245 | 170M7062 | 170M7082 | 170M7102 | 170M7122 |
| | | 2500 | 1,200,000 | 7,800,000 | 275 | 170M7063 | 170M7083 | 170M7103 | 170M7123 |
| | | 3000 | 2,000,000 | 13,500,000 | 305 | 170M7064 | 170M7084 | 170M7104 | 170M7124 |
| | | 3500 | 3,250,000 | 22,000,000 | 325 | 170M7065 | 170M7085 | 170M7105 | 170M7125 |
| | 600 Vac (IEC/UL) | 4000 | 4,700,000 | 28,000,000[1] | 355 | 170M7066 | 170M7086 | 170M7106 | 170M7126 |

† Watts loss at rated current.
1 Clearing at 600 Vac.

For details on electrical characteristics, contact Application Engineering and ask for Data sheet no. 170K6328

## 170M — Square Body size 4, flush-end contact

**690 Vac (IEC), 700 Vac (UL), 1000 to 4000 A**

**Dimensions — mm**

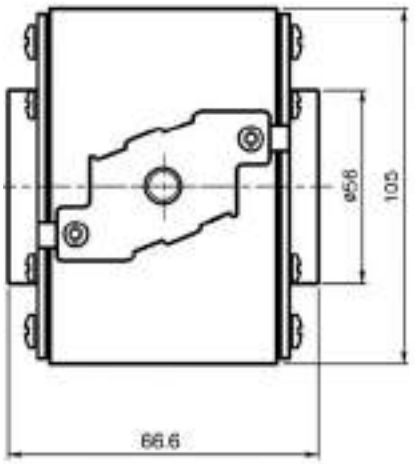


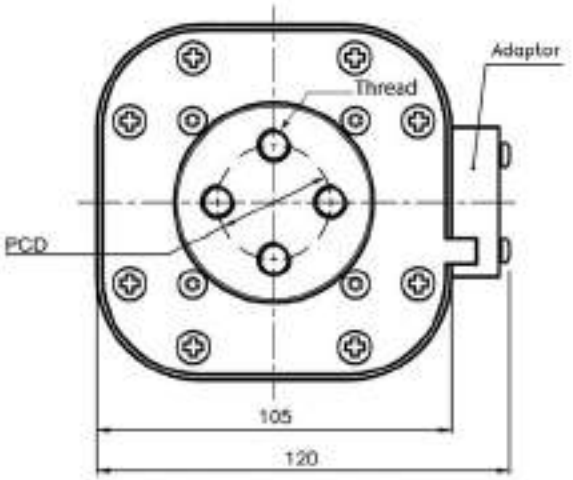


**Type -BKN/65, -GKN/65**

| Type | PCD | Thread |
|---|---|---|
| -GKN/65 | Ø 38.1 | 1/2-13 UNC |
| -BKN/65 | Ø 33.0 | M-10 |

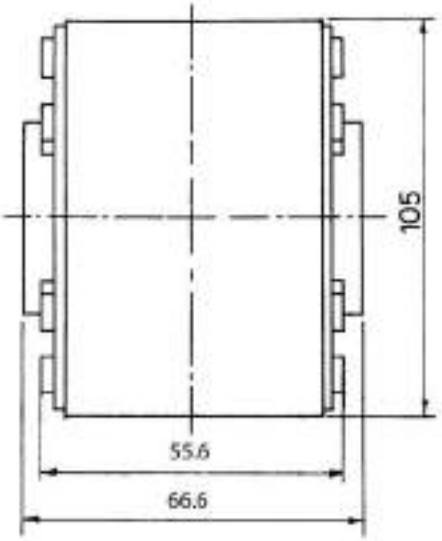


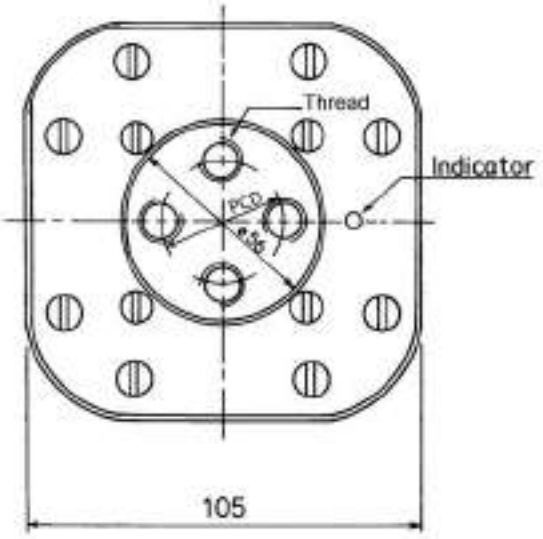


**Type -B/65, -G/65**

| Type | PCDØ | Thread |
|---|---|---|
| -G/65 | 38.1 | 1/2-13 UNC |
| -B/65 | 33.0 | M-10 |

For details on electrical characteristics, contact Application Engineering and ask for Data sheet no.170K6328

## 170M — Square Body size 4, flush-end contact

### 1000 Vac (IEC), 1000 to 3000 A

Square body, flush-end contact, high speed fuses, for the protection of power rectifiers. Catalog numbers come with visual indicator or Type K indicator for use with microswitches.

### Ratings

- Volts 1000 Vac (IEC)
- Amps 1000-3000 A
- IR 200 kA RMS Sym.

### Operating class aR

### Agency information

- Designed and tested to IEC 60269 Part 4
- UL Recognized, JFHR2, E125085
- CE

| Fuse size | Rated voltage | Rated current (amps) | I²t (A²s) Pre-arcing | I²t (A²s) Clearing at 1000 Vac | Watts loss (W)† | Catalog no. -BKN/95 Type K indicator | Catalog no. -SBKN/90 Type K indicator |
|---|---|---|---|---|---|---|---|
| 4 | 1000 Vac | 1000 | 180,000 | 1,100,000 | 195 | — | 170M7542 |
| | | 1100 | 250,000 | 1,500,000 | 200 | — | 170M7031 |
| | | 1500 | 600,000 | 3,600,000 | 250 | 170M7636 | 170M7548 |
| | | 1700 | 850,000 | 5,000,000 | 260 | 170M7639 | 170M7034 |
| | | 1800 | 1,000,000 | 5,950,000 | 265 | 170M7661 | 170M7053 |
| | | 2000 | 1,450,000 | 8,600,000 | 270 | 170M7963 | 170M7544 |
| | | 2200 | 2,000,000 | 12,000,000 | 280 | 170M7090 | 170M7035 |
| | | 2500 | 3,000,000 | 18,000,000 | 295 | 170M7640 | 170M7036 |
| | | 2700 | 3,700,000 | 22,000,000 | 310 | 170M7658 | 170M7037 |
| | | 3000 | 4,700,000 | 28,000,000 | 380 | 170M7962 | 170M7156 |

† Watts loss at rated current.

### Dimensions — mm

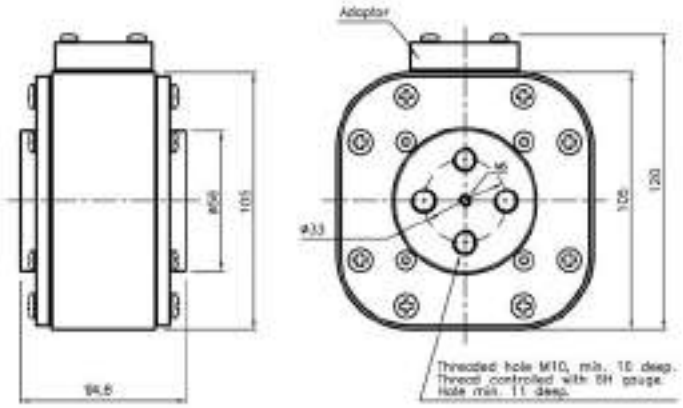


Type 4BKN/95

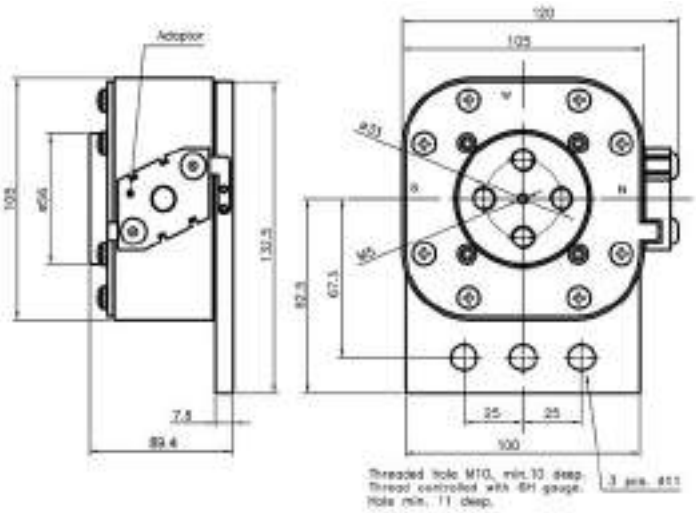


Type 4SBKN/90

For details on electrical characteristics, contact Application Engineering and ask for data sheets:170K8520, 170K8520-R

## 170M — Square Body size 4, flush-end contact

### 1250 Vac (IEC), 800 to 2500 A

Square body, flush-end contact, high speed fuses, for the protection of power rectifiers. Catalog numbers come with visual indicator or Type K indicator for use with microswitches.

### Ratings

- Volts
  - 1250 Vac (IEC)
  - 1200 Vdc (UL)
- Amps 800-2500 A
- IR
  - 200 kA RMS Sym.
  - 85 kA DC (L/R 2 ms)

### Operating class aR

### Agency information

- Designed and tested to IEC 60269 Part 4
- UL Recognized, JFHR2, E125085
- cURus JFHR2, E125085
- CE

| Fuse size | Rated voltage | Rated current (amps) | $I^2t$ ($A^2s$) Pre-arcing | $I^2t$ ($A^2s$) Clearing at 1250 Vac | Watts loss (W)† | Catalog no. -BKN/105 Type K indicator | Catalog no. -SBKN/105 Type K indicator |
|---|---|---|---|---|---|---|---|
| 4 | 1250 Vac (IEC) 1200 Vdc (UL) | 800 | 145,000 | 905,000 | 195 | 170M7802 | — |
| | | 1000 | 275,000 | 1,750,000 | 220 | 170M7803 | — |
| | | 1200 | 495,000 | 3,100,000 | 240 | 170M7804 | — |
| | | 1400 | 800,000 | 5,000,000 | 250 | 170M7217 | 170M7512 |
| | | 1500 | 1,000,000 | 6,200,000 | 260 | 170M7597 | 170M7510 |
| | | 1700 | 1,400,000 | 8,700,000 | 275 | 170M7676 | 170M7511 |
| | | 1800 | 1,700,000 | 11,000,000 | 280 | 170M7532 | 170M7976 |
| | | 2000 | 2,300,000 | 14,500,000 | 305 | 170M7633 | 170M7513 |
| | | 2200 | 3,100,000 | 19,500,000 | 315 | 170M7592 | 170M7546 |
| | | 2400 | 4,000,000 | 25,000,000 | 330 | 170M7107 | 170M7516 |
| | | 2500 | 4,500,000 | 28,000,000 | 340 | 170M7595 | 170M7978 |

† Watts loss at rated current.

### Dimensions — mm

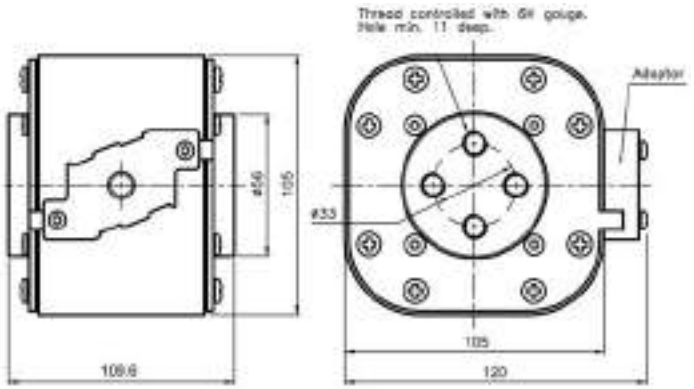


Type 4BKN/105

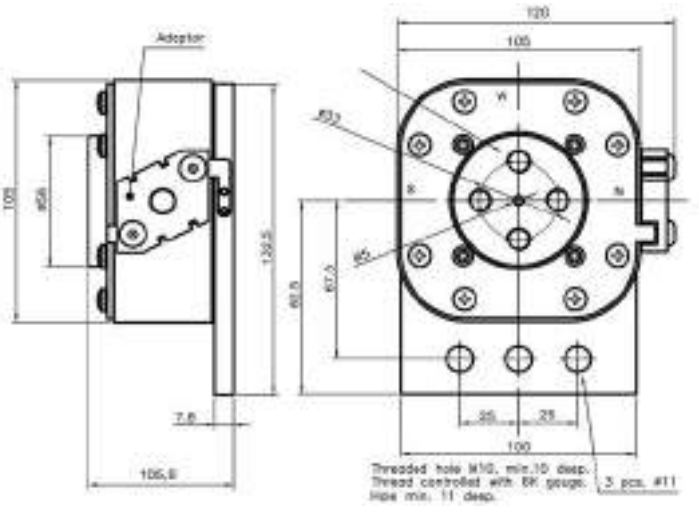


Type 4SBKN/105

For details on electrical characteristics, contact Application Engineering and ask for data sheets:170K6640 (1400-2400 A), 170K6642 (800-1200, 2500 A)

## 170M — Square Body size 23, flush-end contact

### 660 Vac (IEC), 1000 to 4000 A

Square body, flush-end contact, high speed fuses, for the protection of power rectifiers. Catalog numbers available with Type K indicator for use with microswitches.

### Ratings

- Volts
  - 660 Vac (IEC, 1000-3000 A)
  - 600 Vac (IEC, 3500 A)
  - 550 Vac (IEC, 4000 A)
- Amps 1000-4000 A
- IR 100 kA RMS Sym.

### Operating class aR

### Agency information

- Designed and tested to IEC 60269 Part 4
- UL Recognized, JFHR2, E125085
- CE



| | | | I²t (A²s) | | | Catalog no. | | | | | |
|---|---|---|---|---|---|---|---|---|---|---|---|
| Fuse size | Rated voltage | Rated current (amps) | Pre-arcing | Clearing at 660 Vac | Watts loss (W)† | -BU/55 | -BKE/55 Type K indicator | -BKN/55 Type K indicator | -GU/55 | -GKE/55 Type K indicator | -GKN/55 Type K indicator |
| 23 | 660 Vac (IEC) | 1000 | 79,000 | 530,000 | 170 | 170M6858 | 170M6898 | 170M6878 | 170M6918 | 170M6958 | 170M6938 |
| | | 1100 | 95,000 | 635,000 | 185 | 170M6859 | 170M6899 | 170M6879 | 170M6919 | 170M6959 | 170M6939 |
| | | 1250 | 155,000 | 1,050,000 | 190 | 170M6860 | 170M6900 | 170M6880 | 170M6920 | 170M6960 | 170M6940 |
| | | 1400 | 200,000 | 1,350,000 | 210 | 170M6861 | 170M6901 | 170M6881 | 170M6921 | 170M6961 | 170M6941 |
| | | 1500 | 240,000 | 1,650,000 | 215 | 170M6862 | 170M6902 | 170M6882 | 170M6922 | 170M6962 | 170M6942 |
| | | 1600 | 315,000 | 2,150,000 | 220 | 170M6863 | 170M6903 | 170M6883 | 170M6923 | 170M6963 | 170M6943 |
| | | 1800 | 450,000 | 3,050,000 | 230 | 170M6864 | 170M6904 | 170M6884 | 170M6924 | 170M6964 | 170M6944 |
| | | 2000 | 625,000 | 4,200,000 | 240 | 170M6865 | 170M6905 | 170M6885 | 170M6925 | 170M6965 | 170M6945 |
| | | 2200 | 805,000 | 5,400,000 | 255 | 170M6866 | 170M6906 | 170M6886 | 170M6926 | 170M6966 | 170M6946 |
| | | 2500 | 1,250,000 | 8,350,000 | 265 | 170M6867 | 170M6907 | 170M6887 | 170M6927 | 170M6967 | 170M6947 |
| | | 3000 | 2,250,000 | 15,500,000 | 285 | 170M6868 | 170M6908 | 170M6888 | 170M6928 | 170M6968 | 170M6948 |
| | 600 Vac (IEC) | 3500 | 3,450,000 | 21,000,000[1] | 315 | 170M6869 | 170M6909 | 170M6889 | 170M6929 | 170M6969 | 170M6949 |
| | 550 Vac (IEC) | 4000 | 5,000,000 | 27,500,000[2] | 340 | 170M6870 | 170M6910 | 170M6890 | 170M6930 | 170M6970 | 170M6950 |

† Watts loss at rated current.
1 Clearing at 600 Vac.
2 Clearing at 550 Vac.

When using these fuses, please consult our application engineers.

For details on electrical characteristics, contact Application Engineering and ask for Data sheet no. 170K6326

## 170M — Square Body size 23, flush-end contact

**660 Vac (IEC), 1000 to 4000 A**

**Dimensions — mm**

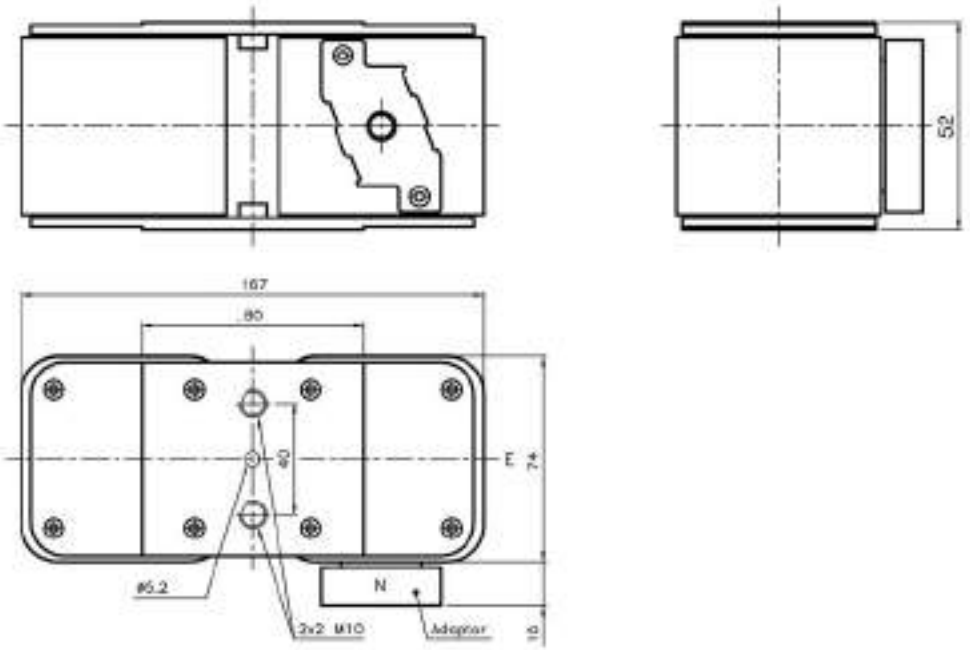


**Type -BU/55, -BKE/55, -BKN/55**

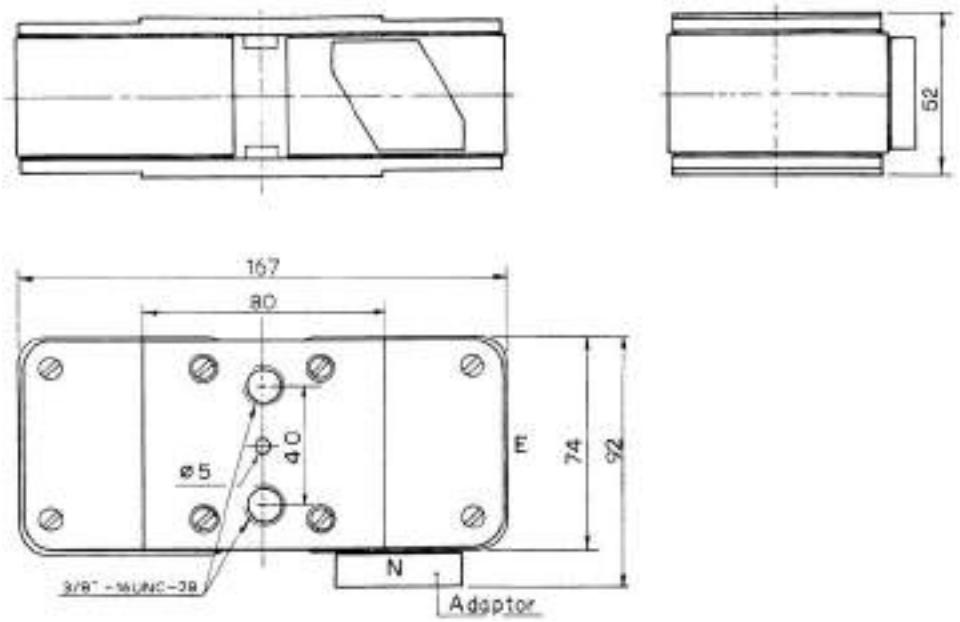


**Type -GU/55, -GKE/55, -GKN/55**

When using these fuses, please consult our application engineers.

For details on electrical characteristics, contact Application Engineering and ask for Data sheet no.170K6326

## 170M — Square Body size 23, flush-end contact

### 1250 Vac (IEC), 630 to 2800 A

Square body, flush-end contact, high speed fuses, for the protection of power rectifiers. Catalog numbers available with visual indicator or Type K indicator for use with microswitches.

### Ratings

- Volts
  - 1250 Vac (IEC 630 to 2200 A)
  - 1100 Vac (IEC 2500 and 2800 A)
  - 900 Vdc (UL, see catalog number table for specific fuses)
- Amps 630-2800 A
- IR 125 kA RMS Sym.

### Operating class aR

### Agency information

- Designed and tested to IEC 60269 Part 4
- UL Recognized
- CE

| Fuse size | Rated voltage | Rated current (amps) | I²t (A²s) Pre-arcing | I²t (A²s) Clearing at 1250 Vac | Watts loss (W)† | Catalog no. -BU/75 visual indicator | Catalog no. -BKE/75 Type K indicator | Catalog no. -BKN/75 Type K indicator | Catalog no. -BU/80 visual indicator | Catalog no. -BKE/80 Type K indicator | Catalog no. -BKN/80 Type K indicator |
|---|---|---|---|---|---|---|---|---|---|---|---|
| 23 | 1250 Vac (IEC) | 630 | 38,000 | 310,000 | 170 | 170M6775 | 170M6795 | 170M6785 | — | — | — |
| | | 700 | 54,000 | 440,000 | 180 | 170M6776 | 170M6796 | 170M6786 | — | — | — |
| | | 800 | 78,000 | 640,000 | 190 | 170M6777 | 170M6797 | 170M6787 | — | — | — |
| | | 900 | 120,000 | 980,000 | 200 | 170M6805 | 170M6807 | 170M6806 | — | — | — |
| | | 1000 | 155,000 | 1,250,000 | 210 | 170M6778 | 170M6798 | 170M6788 | — | — | — |
| | | 1100 | 220,000 | 1,750,000 | 220 | 170M6779 | 170M6799 | 170M6789 | — | — | — |
| | | 1250 | 330,000 | 2,700,000 | 230 | 170M6780 | 170M6800 | 170M6790 | — | — | — |
| | | 1400 | 460,000 | 3,800,000 | 240 | 170M6781 | 170M6801 | 170M6791 | — | — | — |
| | | 1600 | 820,000 | 5,200,000 | 250 | 170M6782 | 170M6802 | 170M6792 | — | — | — |
| | | 1800 | 1,200,000 | 7,600,000 | 260 | 170M6783†† | 170M6803†† | 170M6793†† | — | — | — |
| | | 2000 | 1,800,000 | 11,000,000 | 270 | — | — | — | 170M6784 | 170M6804 | 170M6794 |
| | | 2200 | 2,300,000 | 14,500,000 | 280 | — | — | — | 170M6815 | 170M6833 | 170M6827 |
| | 1100 Vac (IEC) | 2500 | 3,200,000 | 16,000,000[1] | 290 | — | — | — | 170M6816 | 170M6834 | 170M6828 |
| | | 2800 | 5,000,000 | 24,000,000[1] | 300 | — | — | — | 170M6817 | 170M6835 | 170M6829 |

† Watts loss at rated current.
††DC voltage rated at 900 Vdc, UL Recognized, File E125085.
1 Clearing at 1000 V.

When using these fuses, please consult our application engineers.

### Dimensions — mm

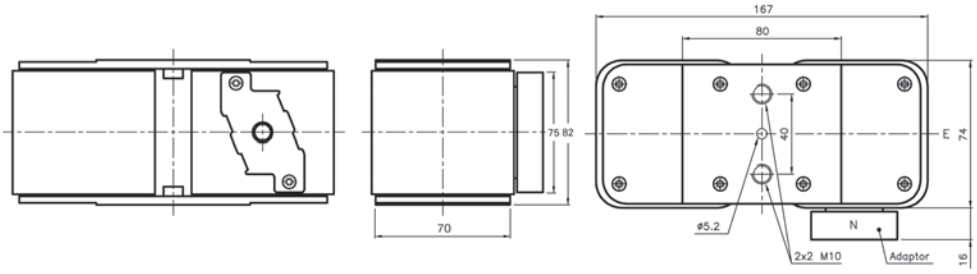


For details on electrical characteristics, contact Application Engineering and ask for Data sheet no.170K6638

## 170M — Square Body size 24, flush-end contact

### 690 Vac (IEC), 2000 to 7500 A

Square body, flush-end contact, high speed fuses, for the protection of power rectifiers. Catalog numbers available with Type K indicator for use with microswitches.

### Ratings

- Volts
  - 690 Vac (IEC 2000 to 7000 A)
  - 500 Vac (IEC 7500 A)
- Amps 2000-7500 A
- IR 200 kA RMS Sym.

### Operating class aR

### Agency information

- Designed and tested to IEC 60269 Part 4
- UL Recognized, JFHR2, E125085
- CE

| Fuse size | Rated voltage | Rated current (amps) | $I^2t$ ($A^2s$) Pre-arcing | $I^2t$ ($A^2s$) Clearing at 660 Vac | Watts loss (W)† | Catalog no. -BU/60 without indicator | Catalog no. -BKN/60 Type K indicator | Catalog no. -GU/60 without indicator | Catalog no. -GKN/60 Type K indicator |
|---|---|---|---|---|---|---|---|---|---|
| 24 | 690 Vac (IEC) | 2000 | 340,000 | 2,300,000 | 340 | 170M7138 | 170M7158 | 170M7198 | 170M7218 |
| | | 2500 | 650,000 | 4,350,000 | 390 | 170M7139 | 170M7159 | 170M7199 | 170M7219 |
| | | 3000 | 1,100,000 | 7,300,000 | 430 | 170M7140 | 170M7160 | 170M7200 | 170M7220 |
| | | 3500 | 1,800,000 | 12,000,000 | 460 | 170M7141 | 170M7161 | 170M7201 | 170M7221 |
| | | 4000 | 2,700,000 | 18,000,000 | 490 | 170M7142 | 170M7162 | 170M7202 | 170M7222 |
| | | 4500 | 3,800,000 | 25,500,000 | 520 | 170M7143 | 170M7163 | 170M7203 | 170M7223 |
| | | 5000 | 5,450,000 | 36,500,000 | 540 | 170M7144 | 170M7164 | 170M7204 | 170M7224 |
| | | 5500 | 7,400,000 | 49,500,000 | 560 | 170M7145 | 170M7165 | 170M7205 | 170M7225 |
| | | 6000 | 9,600,000 | 64,000,000 | 580 | 170M7146 | 170M7166 | 170M7206 | 170M7226 |
| | | 6500 | 12,500,000 | 83,000,000 | 600 | 170M7147 | 170M7167 | 170M7207 | 170M7227 |
| | | 7000 | 15,000,000 | 100,000,000 | 630 | 170M7148 | 170M7168 | 170M7208 | 170M7228 |
| | 500 Vac (IEC) | 7500 | 18,500,000 | 93,000,000[1] | 660 | 170M7149 | 170M7169 | 170M7209 | 170M7229 |

† Watts loss at rated current.
1 Clearing at 500 Vac.

When using these fuses, please consult our application engineers.

### Dimensions — mm

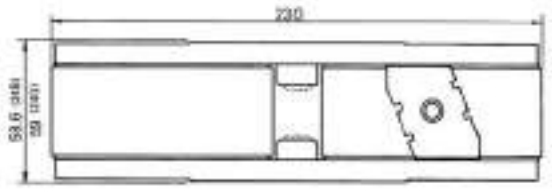


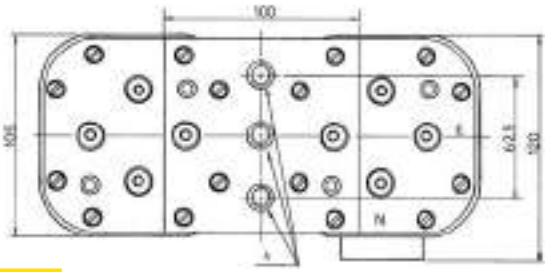


| Size | Type | A |
|---|---|---|
| 24 | BKN | 2x3 M12 |
| | GKN | 2x3 1/2-13 UNC-2B |

For details on electrical characteristics, contact Application Engineering and ask for Data sheet no.170K6332

## 170M — Square Body size 24, flush-end contact

### 1000 Vac (IEC), 2000 to 5000 A

Square body, flush-end contact, high speed fuses, for the protection of power rectifiers. Catalog numbers come with Type K indicator for use with microswitches.

### Ratings

- Volts 1000 Vac (IEC)
- Amps 2000-5000 A
- IR 166 kA RMS Sym.

### Operating class aR

### Agency information

- Designed and tested to IEC 60269 Part 4
- UL Recognized, JFHR2, E125085
- CE



| Fuse size | Rated voltage | Rated current (amps) | I²t (A²s) Pre-arcing | I²t (A²s) Clearing at 1000 Vac | Watts loss (W)† | Catalog no. -BKN/85 Type K indicator |
|---|---|---|---|---|---|---|
| 24 | 1000 Vac (IEC) | 2000 | 900,000 | 5,350,000 | 345 | 170M7608 |
| | | 3000 | 2,950,000 | 17,500,000 | 430 | 170M7680 |
| | | 3200 | 3,300,000 | 20,000,000 | 440 | 170M7567 |
| | | 3500 | 4,500,000 | 27,000,000 | 450 | 170M7568 |
| | | 4000 | 6,800,000 | 40,000,000 | 475 | 170M7569 |
| | | 4200 | 8,000,000 | 47,500,000 | 485 | 170M7498 |
| | | 4500 | 10,000,000 | 59,000,000 | 495 | 170M7488 |
| | | 5000 | 14,000,000 | 82,500,000 | 540 | 170M7622 |

† Watts loss at rated current.

When using these fuses, please consult our application engineers.

### Dimensions — mm

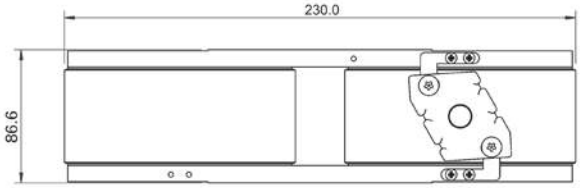


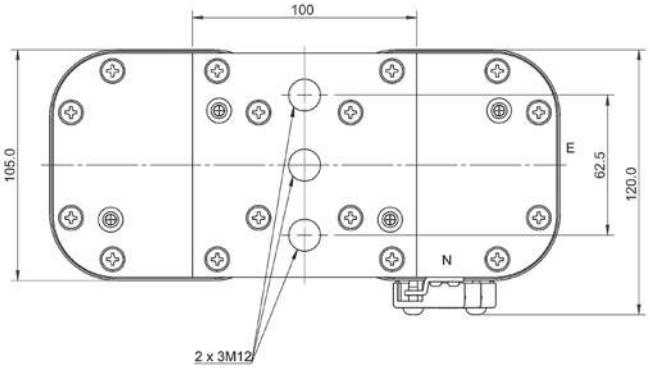


The normal position of the indicator is as shown position "N", position "E" on request only.

For details on electrical characteristics, contact Application Engineering and ask for Data sheet no.170K8514

## Square Body fuse accessories

### Fixed center fuse blocks for DIN 43653 fuses

Fuse blocks for use with DIN 43653 square body fuses with center distances of 80 and 110mm. Available for sizes 000, 00, 1*, 1, 2 and 3.

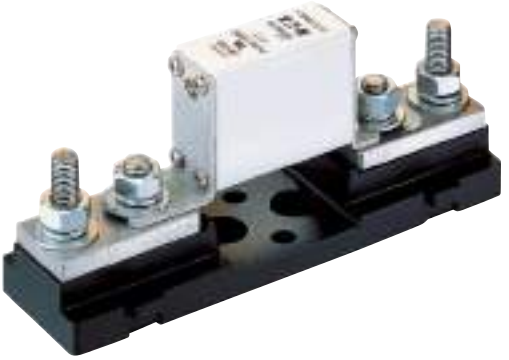

### Sizes 000 to 00

| Catalog no. | Max rated voltage | Max fuse amp rating | Center distance (mm) | Fuse sizes |
|---|---|---|---|---|
| 170H1007 | 1000 | 400 | 80 | 00, 000 |
| 170H1013 | 690 | 200 | 80 | 0000, 000 |

### Dimensions — mm

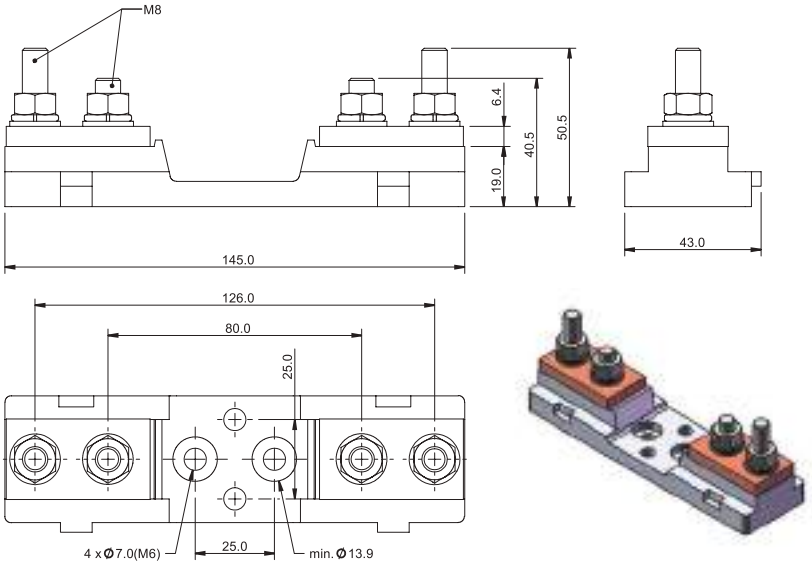


**170H1007**

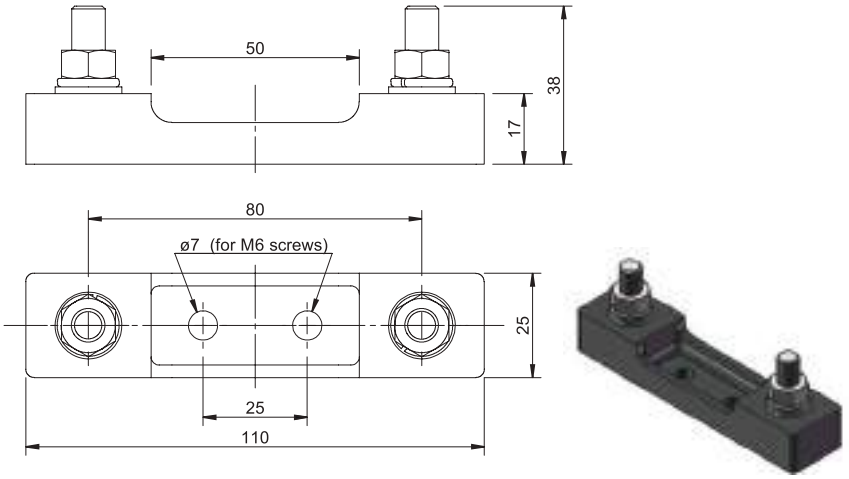


**170H1013**

## Square Body fuse accessories

### Fixed center fuse blocks for DIN 43653 fuses

### Sizes 1* to 3

| Catalog no. | Max rated voltage | Max fuse amp rating | Center distance (mm) |
|---|---|---|---|
| 170H3003 | 1000 | 630 | 80 |
| 170H3004† | 1000 | 1250 | 80 |
| 170H3005 | 1400 | 630 | 110 |
| 170H3006† | 1400 | 1250 | 110 |

† Fuses with ratings higher than 1250 A can be used with 170H3004 or 170H3006 if the maximum load current is derated according to this table.

| Fuse amp rating | Max. amp load in fuse block |
|---|---|
| 1400 | 1325 |
| 1500 | 1400 |
| 1600 | 1500 |
| 1800 | 1650 |
| 2000 | 1800 |

### Dimensions — mm

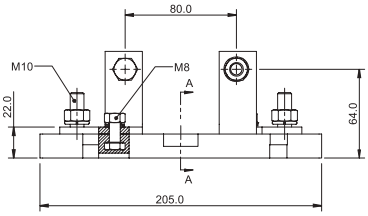


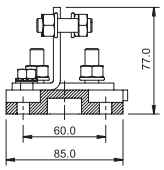


SECTION A-A

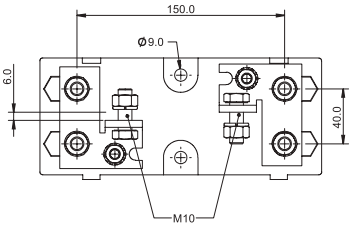

**170H3003**

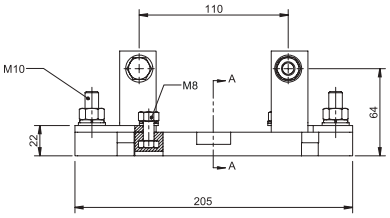


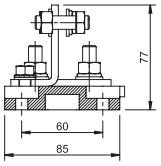


SECTION A-A

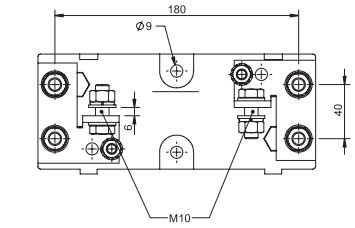

**170H3005**

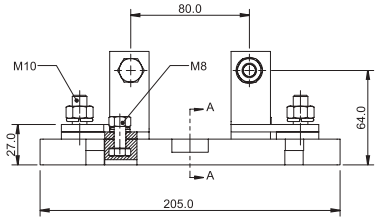


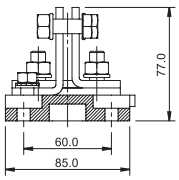


SECTION A-A

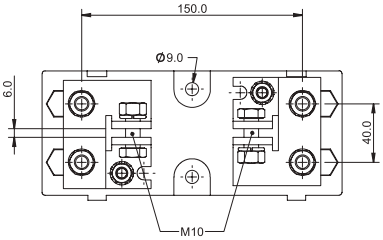

**170H3004**

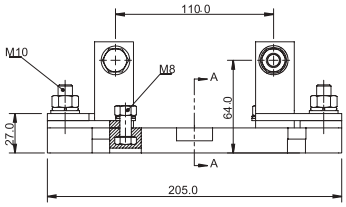


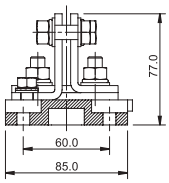


SECTION A-A

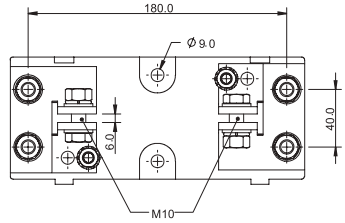

**170H3006**

## Square Body fuse accessories

### Indicators

High speed square body fuses are available with the following indicators.

### Visual indicator

The indicator situated in one end plate is clearly visible as soon as the fuse has operated. The minimum rated voltage for operating the indicator is 20 V.

### Type T indicator

The indicator is situated on one cover plate with a cover plate tag to accommodate an auxiliary switch. The minimum rated voltage for operating the indicator is 20 V. A special low rated voltage indicator (1.5 V) is available on request.

### Type K indicator

The indicator is situated on the fuse body. It is covered by an adapter for snap-on mounting of a microswitch. The rated operating voltage of the indicator is 1.5 V. As a matter of safety, the factory mounted adapter must not be removed from the fuse.

## Microswitches

High speed square body fuses with either Type T or K indicators can be equipped with a microswitch for remote signaling of fuse operation. All microswitches have one normally open (NO) and one normally closed (NC) contact.

### Ratings

- Volts 250 Vac
- Amps 5 A

### Catalog numbers

| Fuse size | DIN 43653 | | DIN 43620 | | French style | | Flush-end | | US style | Quick connect terminal size (mm) |
|---|---|---|---|---|---|---|---|---|---|---|
| | Type T | Type K | aR | gR and dual indication | Type T | Type K | Type T | Type K | Type K | |
| 000 | 170H0236 | — | 170H0236 | 170H0236 | — | — | — | — | — | 6.3x0.8 |
| | 170H0238 | — | 170H0238 | 170H0238 | — | — | — | — | — | 2.8x0.5 |
| 00 | 170H0235 | — | 170H0236 | 170H0236 | — | — | 170H0235 | — | — | 6.3x0.8 |
| | 170H0237 | — | 170H0238 | 170H0238 | — | — | 170H0237 | — | — | 2.8x0.5 |
| 1* | 170H0235 | 170H0069 | 170H0235 | — | 170H0236 | 170H0069 | — | 170H0069 | 170H0069 | 6.3x0.8 |
| | 170H0237 | — | 170H0237 | — | 170H0238 | — | — | — | — | 2.8x0.5 |
| 1 | 170H0235 | 170H0069 | 170H0235[1] | 170H0236 | 170H0236 | 170H0069 | — | 170H0069 | 170H0069 | 6.3x0.8 |
| | 170H0237 | — | 170H0237[1] | 170H0238 | 170H0238 | — | — | — | — | 2.8x0.5 |
| 2 | 170H0235 | 170H0069 | 170H0235 | 170H0236 | 170H0236 | 170H0069 | — | 170H0069 | 170H0069 | 6.3x0.8 |
| | 170H0237 | — | 170H0237 | 170H0238 | 170H0238 | — | — | — | — | 2.8x0.5 |
| 3 | 170H0235 | 170H0069 | 170H0236 | 170H0236 | 170H0236 | 170H0069 | — | 170H0069 | 170H0069 | 6.3x0.8 |
| | 170H0237 | — | 170H0238 | 170H0238 | 170H0238 | — | — | — | — | 2.8x0.5 |
| 4 | — | — | — | — | — | — | — | 170H0069 | — | 6.3x0.8 |
| 23 | — | — | — | — | — | — | — | 170H0069 | — | |
| 24 | — | — | — | — | — | — | — | 170H0069 | — | |

1 DIN2* (55x55), if DIN2 then use microswitch 170H0236, 170H0238.
For special microswitches, double microswitches, microswitches with DC ratings, lower/higher signal levels and for insulation voltages please contact Eaton's Bussmann Division: bulehighspeedtechnical@eaton.com.

## 170M — IGBT size 000 and 230

### 750 Vdc (IEC), 800 Vdc (UL), 25 to 630 A

Bolted tag high speed fuses for the protection of IGBT modules, optimized for use in IGBT inverter circuits with DC fuse voltage ratings up to 750 Vdc. Low inductance ≤ 15nH.

### Ratings

- Volts
  - 750 Vdc tested at 863 Vdc according to IEC 60269-4
  - 800 Vdc tested at 800 Vdc according to UL 248-1
- Amps 25-630 A
- IR 50 kA DC (1ms tc) at 800 Vdc

### Operating class aR

### Agency information

- UL DC Recognized, 800 Vdc L/R 1 ms max

| Fuse size | Rated voltage | Rated current (amps) | I²t (A²s) Pre-arcing | I²t (A²s) Clearing at 690 Vac | Watts loss (W)† | Catalog no. -FU/70 | Catalog no. -FN/70 |
|---|---|---|---|---|---|---|---|
| 000 | 750 Vdc (IEC) 800 Vdc (UL) | 25 | 25 | 135 | 12 | 170M1750 | 170M1730 |
| | | 32 | 45 | 240 | 13 | 170M1751 | 170M1731 |
| | | 40 | 75 | 395 | 14 | 170M1752 | 170M1732 |
| | | 50 | 135 | 695 | 16 | 170M1753 | 170M1733 |
| | | 63 | 260 | 1350 | 17 | 170M1754 | 170M1734 |
| | | 80 | 460 | 2350 | 20 | 170M1755 | 170M1735 |
| | | 100 | 795 | 4000 | 25 | 170M1756 | 170M1736 |
| | | 125 | 1300 | 6800 | 29 | 170M1757 | 170M1737 |
| | | 160 | 2550 | 13500 | 34 | 170M1758 | 170M1738 |
| | | 200 | 4350 | 22000 | 40 | 170M1759 | 170M1739 |
| | | 250 | 7400 | 37500 | 48 | 170M1760 | 170M1740 |
| | | 315 | 12,500 | 65000 | 60 | 170M1761 | 170M1741 |
| | | 350 | 17,000 | 88000 | 65 | 170M1762 | 170M1742 |
| 230 | | 100 | 380 | 1950 | 35 | 170M1770 | 170M1785 |
| | | 125 | 645 | 3300 | 42 | 170M1771 | 170M1786 |
| | | 160 | 1350 | 7000 | 47 | 170M1772 | 170M1787 |
| | | 200 | 2550 | 13500 | 54 | 170M1773 | 170M1788 |
| | | 250 | 4950 | 25000 | 62 | 170M1774 | 170M1789 |
| | | 315 | 9350 | 47500 | 72 | 170M1775 | 170M1790 |
| | | 350 | 12,000 | 61000 | 78 | 170M1776 | 170M1791 |
| | | 400 | 18,500 | 94500 | 80 | 170M1777 | 170M1792 |
| | | 450 | 27,000 | 140000 | 85 | 170M1778 | 170M1793 |
| | | 500 | 37,500 | 190000 | 90 | 170M1779 | 170M1794 |
| | | 550 | 48,500 | 245000 | 95 | 170M1780 | 170M1795 |
| | | 630 | 69,500 | 355000 | 105 | 170M1781 | 170M1796 |

† Watts loss at rated current.

For details on electrical characteristics, contact Application Engineering and ask for data sheets:170K6422 (Size 000), 170K6426 (Size 230)

## 170M — IGBT size 000 and 230

**750 Vdc (IEC), 800 Vdc (UL), 25 to 630 A**

**Dimensions — mm**

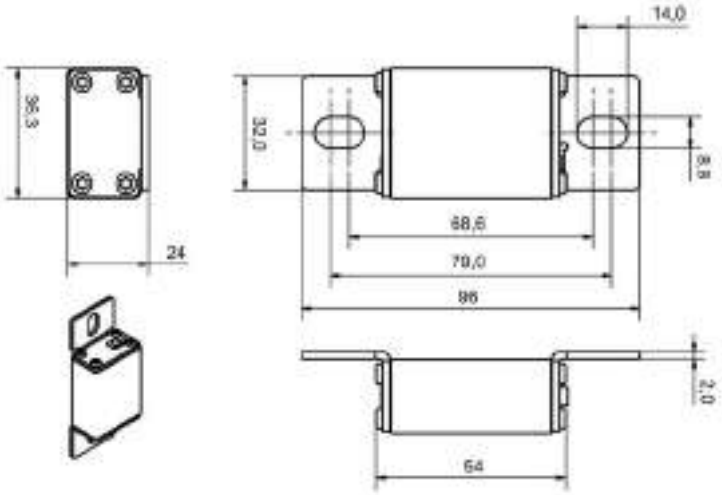


**Size 000**

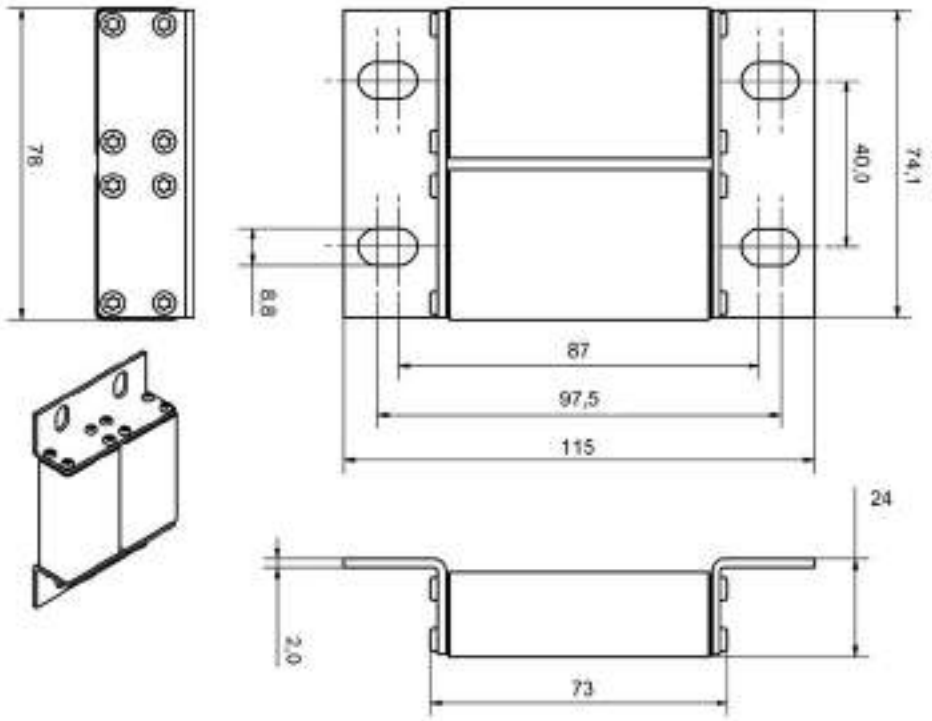


**Size 230**

For details on electrical characteristics, contact Application Engineering and ask for data sheets: 170K6422 (Size 000), 170K6426 (Size 230)

## 170M — IGBT size 000 and 230

### 1000 Vdc (IEC and UL), 25 to 500 A

Bolted tag high speed fuses for the protection of IGBT modules, optimized for use in IGBT inverter circuits with DC fuse voltage ratings up to 1000 Vdc. Low inductance ≤ 20nH.

### Ratings

- Volts
  - 1000 Vdc tested at 1150 Vdc according to IEC 60269-4
  - 1000 Vdc tested at 1000 Vdc according to UL 248-1
- Amps 25-500 A
- IR 50 kA DC (1ms tc)

### Operating class aR

### Agency information

- UL DC Recognized, 1000 Vdc L/R 1ms max

| Fuse size | Rated voltage | Rated current (amps) | I²t (A²s) Pre-arcing | I²t (A²s) Clearing at 1000 Vac | Watts loss (W)† | Catalog no. -FU/90 | Catalog no. -FN/90 |
|---|---|---|---|---|---|---|---|
| 000 | 1000 Vdc (IEC/UL) | 25 | 19 | 95 | 14 | 170M1802 | 170M1842 |
| | | 32 | 34 | 170 | 17 | 170M1803 | 170M1843 |
| | | 40 | 61 | 300 | 20 | 170M1804 | 170M1844 |
| | | 50 | 135 | 675 | 21 | 170M1805 | 170M1845 |
| | | 63 | 245 | 1200 | 22 | 170M1806 | 170M1846 |
| | | 80 | 505 | 2500 | 27 | 170M1807 | 170M1847 |
| | | 100 | 1050 | 5150 | 32 | 170M1808 | 170M1848 |
| | | 125 | 1900 | 9500 | 34 | 170M1809 | 170M1849 |
| | | 160 | 4050 | 20,000 | 37 | 170M1810 | 170M1850 |
| | | 200 | 8500 | 42,000 | 43 | 170M1811 | 170M1851 |
| | | 225 | 12,000 | 59,000 | 45 | 170M1812 | 170M1852 |
| | | 250 | 16,000 | 79,500 | 48 | 170M1813 | 170M1853 |
| 230 | | 100 | 600 | 3050 | 38 | 170M1824 | 170M1860 |
| | | 125 | 1200 | 6050 | 42 | 170M1825 | 170M1861 |
| | | 160 | 2550 | 13,000 | 48 | 170M1826 | 170M1862 |
| | | 200 | 4650 | 23,000 | 55 | 170M1827 | 170M1863 |
| | | 250 | 9300 | 45,500 | 62 | 170M1828 | 170M1864 |
| | | 315 | 18,500 | 91,500 | 68 | 170M1829 | 170M1865 |
| | | 350 | 24,500 | 125,000 | 75 | 170M1830 | 170M1866 |
| | | 400 | 37,500 | 185,000 | 80 | 170M1831 | 170M1867 |
| | | 450 | 52,000 | 260,000 | 85 | 170M1832 | 170M1868 |
| | | 500 | 69,500 | 340,000 | 90 | 170M1833 | 170M1869 |

† Watts loss at rated current.

For details on electrical characteristics, contact Application Engineering and ask for data sheets: 170K6680 (Size 000), 170K6682 (Size 230)

## 170M — size 000 and 230

**1000 Vdc (IEC and UL), 25 to 500 A**

**Dimensions — mm**

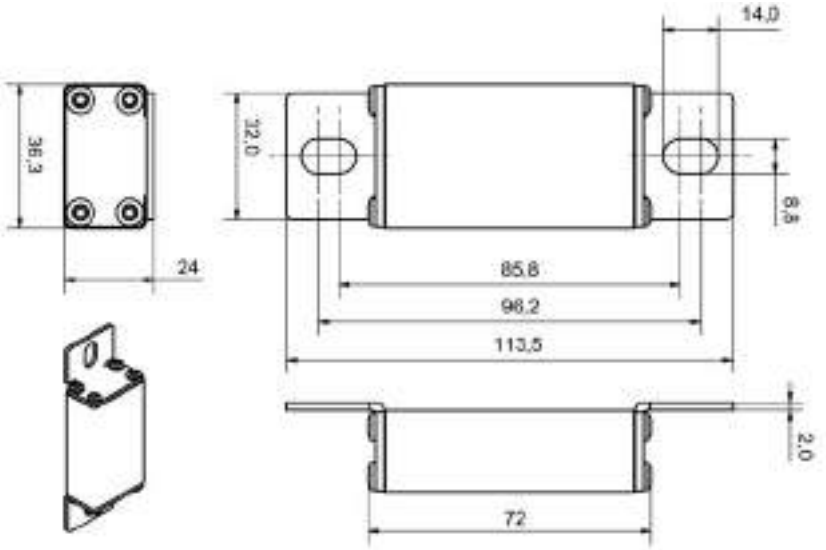


**Size 000**

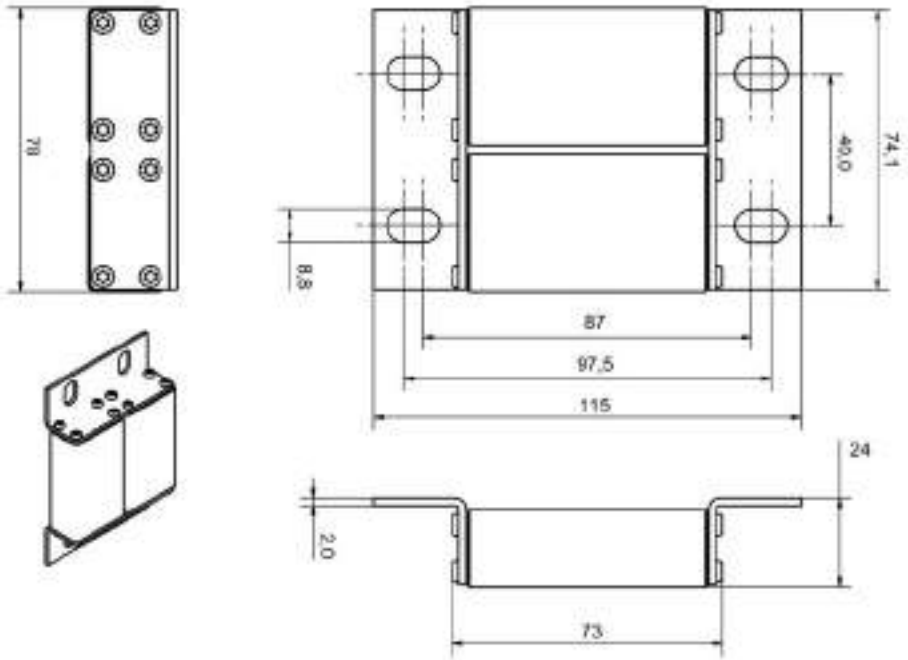


**Size 230**

For details on electrical characteristics, contact Application Engineering and ask for data sheets:170K6680 (Size 000), 170K6682 (Size 230)

# Bussmann series IEC cylindrical fuses

Complete portfolio of 8-22 mm diameter Class aM and Class gG cylindrical fuses for industrial applications

## Contents


| Description | Section page |
|---|---|
| **Fuses** | |
| CSA Type P and D fuses (CDN, CDS and PON) | 2 |
| HRC Form II Class C fuses (CGL) | 3 |
| **HRCI industrial ceramic body fuses** | |
| HRCI-CA (CIF21) | 4 |
| HRCI-CB (CIF06) | |
| HRCI-Misc. Type K (CIH, CIK and CIL) | 5 |
| HRC Form II current-limiting fuses (H07C, K07C, L14C, M14C, L09C, M09C, P09C, P11C, R11C) | 6 |
| **BS88 Part 1 fuses** | |
| SSD, NSD, ESD | 7 |
| STD, NITD, AAO, BAO, OSD, CEO, DEO | |
| **BS88** | |
| AC, AD, BC, BD, CD, DD, ED, EFS | 8 |
| EF, FF, FG, GF, GG, GH | |
| DIN Type D Diazed (D16, D27, D33, D125) | 9 |
| DIN Type N Neozed (NZ01, NZ02) | |
| NH HRC fuses (NHG) | 10-11 |
| JKS-700 fast-acting, current limiting UL Recognized and CSA Component Acceptance 700 Vac fuses up to 60 amps | 11 |
| **NH fuse blocks and accessories (SD, TD)** | **12** |
| **Fuses continued** | |
| **IEC 60269 industrial fuses with and without indicator/striker** | |
| Class gG ferrule (C10G, C14G, C22G) | 13 |
| Class aM ferrule (C10M, C14M, C22M) | 14 |
| **HRC fuse holders** | |
| CAMaster | 15 |
| SAFEloc | |
| Red Spot | |

## CDN, CDS and PON CSA Type P and D fuses

CSA time-delay Type D and P fuses.

### Ratings

- Volts
  - 250 Vac (CDN and PON)
  - 600 Vac (CDS)
- Amps 10-600 A
- IR 10 kA minimum

### Agency information

- CSA Certified, Class 1421-01, File 53787, CE

### Features

- Economical fuse in a variety of ratings for applications not requiring time-delay

### Typical applications

- Lighting, heating and other circuits not subject to temporary surges and where available short-circuit current are relatively low

| Catalog no.* | | |
|---|---|---|
| **Catalog symbol** | **Volts** | **Available amp ratings** |
| **Time-Delay CSA Type "D" fuses** | | |
| CDN** | 250 Vac | 10, 12, 15, 20, 25, 30, 35, 40, 45, 50, 60, 70, 80, 90, 100, 110, 125, 150, 175, 200, 225, 250, 300, 350, 400, 450, 500, 600 |
| CDS† | 600 Vac | 10, 12, 15, 20, 25, 30, 35, 40, 45, 50, 60, 70, 80, 90, 100, 110, 125, 150,175, 200, 225, 250, 300, 350, 400, 450, 500, 600 |
| **One-time CSA Type "P" fuses** | | |
| PON | 250 Vac | 15, 20, 25, 30, 35, 40, 45, 50, 60 |

* To order, specify catalog symbol and amp rating, e.g., CDN30, CDS110 or PON40.
**Below 10 amps, use FRN-R.
† Below 10 amps, use FRS-R.

### Dimensions — in (mm)

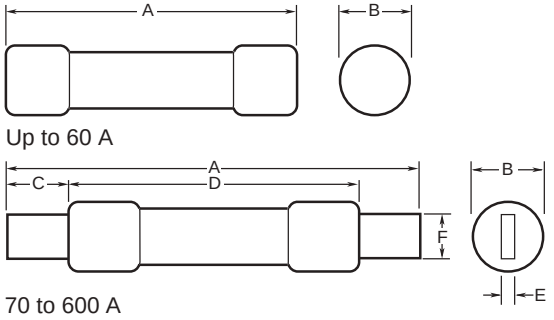


| Amps | A | B | C | D | E | F |
|---|---|---|---|---|---|---|
| **CDN/PON 250 Vac** | | | | | | |
| Up to 30 | 2.0 (51) | 0.6 (14) | — | — | — | — |
| 35-60 | 3.0 (76) | 0.8 (21) | — | — | — | — |
| 70-100 | 5.9 (149) | — | 1.0 (25) | — | 0.1 (3) | 0.8 (19) |
| 110-200 | 7.3 (185) | — | 1.4 (35) | 4.1 (105) | 0.2 (5) | 1.1 (29) |
| 225-400 | 8.6 (219) | — | 1.9 (48) | 4.6 (118) | 0.3 (6) | 1.6 (41) |
| 450-600 | 10.4 (264) | — | 2.3 (57) | 5.2 (132) | 0.3 (6) | 2 (51) |
| **CDS 600 Vac** | | | | | | |
| Up to 30 | 5.0 (127) | 0.8 (21) | — | — | — | — |
| 35-60 | 5.5 (140) | 1.1 (27) | — | — | — | — |
| 70-100 | 7.9 (200) | — | 1.0 (25) | — | 0.1 (3) | 0.8 (19) |
| 110-200 | 9.6 (245) | — | 1.4 (35) | 6.1 (116) | 0.2 (5) | 1.1 (29) |
| 225-400 | 11.6 (295) | — | 1.9 (48) | 7.1 (118) | 0.3 (6) | 1.6 (41) |
| 450-600 | 13.4 (340) | — | 2.3 (57) | 8.2 (208) | 0.3 (6) | 2 (51) |

### Recommended fuse blocks

| Catalog no.* | Volts | |
|---|---|---|
| **Fuse amps** | **250** | **600** |
| Up to 30 | HM25030-(poles) | HM60030-(poles) |
| 35-60 | HM25060-(poles) | HM60060-(poles) |
| 70-100 | HM25100-(poles) | HM60100-(poles) |
| 110-200 | HM25200-(poles) | HM60200-(poles) |
| 225-400 | HM25400-(poles) | HM60400-(poles) |
| 450-600 | HM25600-(poles) | HM60600-(poles) |

* To order, specify 1, 2 or 3 poles, e.g., HM25030-**2**_. See data sheets 10289 (30-60 A) and 3192 (70-600 A) for available terminals.

**Data sheet no. 4126**

## CGL HRC Form II Class C fuses

Current-limiting HRCII-C fuses designed to withstand inrush currents on typical motor start-ups while offering high current limitation in the short-circuit region. See drawings for dimensions.

### Ratings

- Volts
  - 600 Vac
  - 250 Vdc (1-30 A)
- Amps 1-600 A
- IR
  - 200 kA
  - 40 kA DC

### Agency information

- CSA Certified, Class 1422,File 53787, CE

| Catalog no. (amps) | | | |
|---|---|---|---|
| CGL-1 | CGL-25 | CGL-80 | CGL-225 |
| CGL-2 | CGL-30 | CGL-90 | CGL-250 |
| CGL-3 | CGL-35 | CGL-100 | CGL-300 |
| CGL-4 | CGL-40 | CGL-110 | CGL-350 |
| CGL-6 | CGL-45 | CGL-125 | CGL-400 |
| CGL-10 | CGL-50 | CGL-150 | CGL-450 |
| CGL-15 | CGL-60 | CGL-175 | CGL-500 |
| CGL-20 | CGL-70 | CGL-200 | CGL-600 |

### Features

- Close sizing to loads allows using smaller and less costly switches
- Provides a higher degree of short-circuit protection
- Helps protect motors against burnout from overloads

### Typical applications

- For use in circuits subject to surge currents such as those caused by motors, transformers and other inductive loads

### Available Red Spot fuse holders

| Fuse amps | Catalog symbol* |
|---|---|
| Up to 32 | RS32_ |
| 35-60 | RS63_ |
| 70-100 | RS100_ |
| 110-200 | RS200_ |
| 225-400 | RS400_ |

* See Red Spot data sheet no. 10083 for terminal options.

### Dimensions — in (mm)

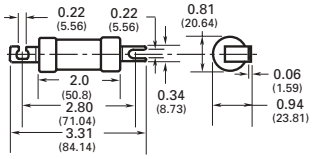


CGL 1-30

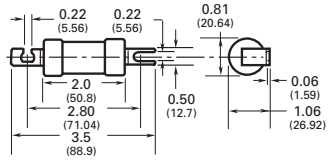


CGL 35-60

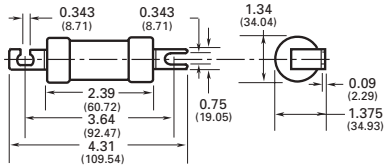


CGL 70-100

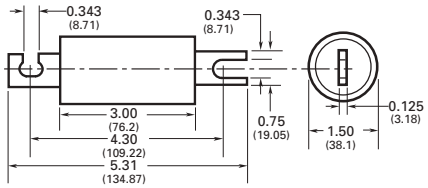


CGL 110-200

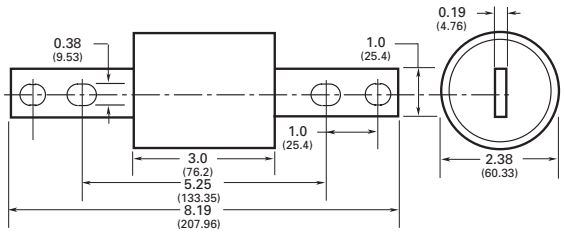


CGL 225-400

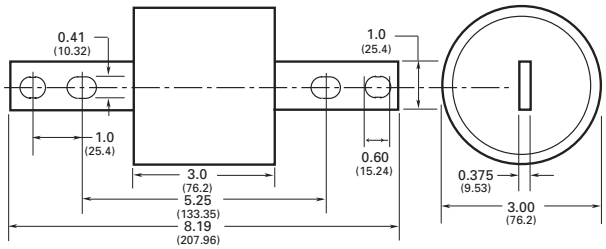


CGL 450-600

## CIF21 HRCI-CA industrial ceramic body fuses

The HRCI-CA bolt-on, ceramic body fuse provides both overload and short-circuit protection to HRCI requirements. Offset blades for bolt-on mounting CIF21 fuse fits the Bussmann series Red Spot fuse holder (data sheet 10083) and CAMaster fuse holder (data sheet number 4132).

### Ratings

- Volts
  - 600 Vac
  - 250 Vdc
- Amps 1-30 A
- IR 200 kA RMS Sym.

### Agency information

- CSA, Class 1422-02, File 53787, CE

| Catalog no. | Amps | Catalog no. | Amps |
|---|---|---|---|
| 1CIF21 | 1 | 15CIF21 | 15 |
| 3CIF21 | 3 | 20CIF21 | 20 |
| 6CIF21 | 6 | 25CIF21 | 25 |
| 10CIF21 | 10 | 30CIF21 | 30 |

### Features

- Close sizing to loads allows using smaller and less costly switches
- Provides a higher degree of short-circuit protection
- Helps protect motors against burnout from overloads

### Typical applications

- For use in circuits subject to surge currents such as those caused by motors, transformers and other inductive loads

### Recommended fuse holders

| Amps | Description | Catalog no.* |
|---|---|---|
| Up to 20 | Red Spot | RS20_(terminal option) |
| Up to 30 | CAMaster | CM20CF |

* See data sheet no. 10083 (Red Spot) and 4132 (CAMaster) for details.

### Dimensions — in (mm)

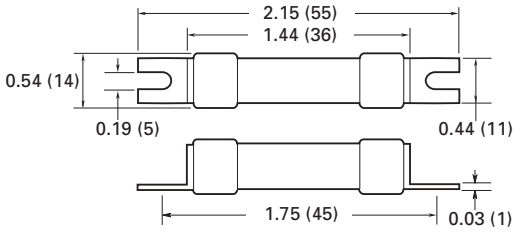


## CIF06 HRCI-CB industrial ceramic body fuses

A miniature offset clip-in blade, ceramic body industrial fuse that provides both short-circuit and overload protection and the CIF06 fits the 30 A SAFEloc fuse holder (data sheet number 4133).

### Ratings

- Volts
  - 600 Vac
  - 250 Vdc
- Amps 1-30 A
- IR 200 kA RMS Sym.

### Agency information

- CSA, Class 1422-02, File 53787 (3-30 A only), CE

| Catalog no. | Amps | Catalog no. | Amps |
|---|---|---|---|
| 1CIF06 | 1 | 15CIF06 | 15 |
| 3CIF06 | 3 | 20CIF06 | 20 |
| 6CIF06 | 6 | 25CIF06 | 25 |
| 10CIF06 | 10 | 30CIF06 | 30 |

### Features

- Close sizing to loads allows using smaller and less costly switches
- Provides a higher degree of short-circuit protection
- Helps protect motors against burnout from overloads

### Typical applications

- For use in circuits subject to surge currents such as those caused by motors, transformers and other inductive loads

### Recommended fuse holders

| Amps | Description | Catalog no.* |
|---|---|---|
| Up to 30 | SAFEloc | C30(terminal option) |

* See data sheet no. 4133 for SAFEloc details.

### Dimensions — in (mm)

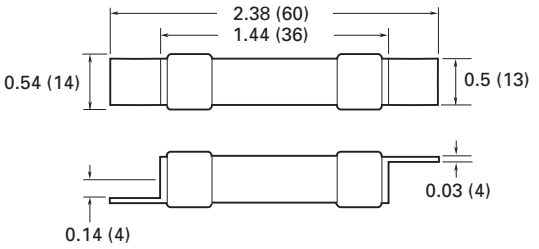


Data sheet no. 4127

Data sheet no. 4128

## CIH, CIK and CIL HRCI — Misc. Type K fuses

Misc. Type K HRCI bolt-on, ceramic body fuses provide both overload and short-circuit protection, featuring offset blades for bolt down mounting.

### Ratings

- Volts 600 V
- Amps 1-100 A
- IR 200 kA@600 V

### Agency information

- CSA, Class 1422-02, File 53787, CE

| Catalog no. (amp)CIH, CIK, CIL | | | |
|---|---|---|---|
| 1CIH07 | 15CIH07 | 35CIK07 | 80CIL14 |
| 3CIH07 | 20CIH07 | 40CIK07 | 90CIL14 |
| 6CIH07 | 25CIH07 | 50CIK07 | 100CIL14 |
| 10CIH07 | 30CIH07 | 60CIK07 | |

### Dimensions — in (mm)

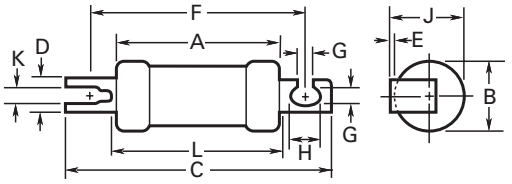


The CIL14 has a rejection hole, not a slot as shown above.

| Amps | A | B | C | D | E | F | G | H | J | K | L |
|---|---|---|---|---|---|---|---|---|---|---|---|
| Up to 30 | 2.25 (57) | 0.94 (24) | 3.38 (86) | 0.38 (10) | 0.04 (1) | 2.88 (73) | 0.21 (5) | 0.31 (8) | 1 (25) | 0.10 (3) | 2.38 (60) |
| 35-60 | 2.28 (58) | 1.06 (27) | 3.56 (91) | 0.5 (13) | 0.05 (1) | 2.88 (73) | 0.21 (5) | 0.41 (11) | 1.09 (28) | 0.13 (3) | 2.38 (61) |
| 80-100 | 2.75 (70) | 1.44 (37) | 4.38 (111) | 0.75 (19) | 0.09 (3) | 3.69 (94) | 0.34 (9) | 0.41 (11) | 1.5 (39) | — | 2.91 (74) |

### Recommended fuse holders

| Amps | Red Spot* | CAMaster* |
|---|---|---|
| Up to 30 | RS32_ | CM30CF |
| 35-60 | RS63_ | CM60CF |
| 80-100 | RS100_ | — |

* See data sheet no. 10083 (Red Spot) and 4132 (CAMaster) for details.



**Data sheet no. 4130**

## HRC Form II current-limiting fuses

HRC Form II bolt-on, ceramic body current-limiting fuses.

### Ratings

- Volts
  - 600 Vac (or less)
  - 250 Vdc
- Amps 2-600 A
- IR 200 kA RMS Sym.

### Agency information

- CSA, Class 1422-02, File 53787, BS88:2, IEC 60269:2, CE

| (amps) catalog no. | | | |
|---|---|---|---|
| **H07C offset blades** | | | |
| 2H07C | 6H07C | 15H07C | 25H07C |
| 4H07C | 10H07C | 20H07C | 30H07C |
| **K07C offset blades** | | | |
| 40K07C | 60K07C | 100K07CR | |
| 50K07C | 80K07CR | | |
| **L14C offset blades** | | | |
| 80L14C | 100L14C | | |
| **M14C offset blades** | | | |
| 125M14C* | 150M14C* | 200M14C* | |
| **L09C center blades** | | | |
| 80L09C* | 100L09C* | | |
| **M09C center blades** | | | |
| 125M09C | 150M09C | 200M09C | |
| **P09C center blades** | | | |
| 250P09C* | 300P09C* | 350P09C* | 400P09C* |
| **P11C center blades** | | | |
| 250P11C | 300P11C | 350P11C | 400P11C |
| **R11C center blades** | | | |
| 450R11C | 500R11C | 600R11C | |

* Not suitable for installation in Red Spot fuse holders.

### Typical applications

- Used to protect motor control circuits, together with contactors and overload protection relays to provide Type 2 coordination per IEC 60947-4.

Recommended fuse holders: Red Spot up to 400 amps (data sheet no.10083) and CAMaster up to 100 amps (data sheet no. 4132).

### Dimensions — in (mm)

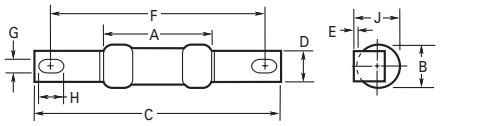


H07C offset blades

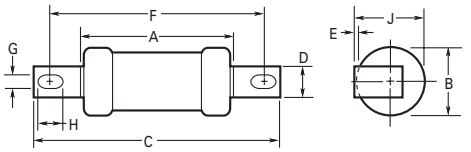


K07C, K07CR, L14C, M14C offset blades

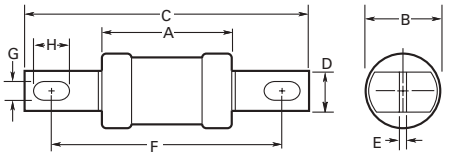


L09C, M09C, P09C center blades

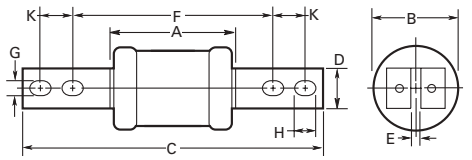


P11C, R11C center blades

| Catalog symbol/ style | A | B | C | D | E | F | G | H | J | K | CSA category |
|---|---|---|---|---|---|---|---|---|---|---|---|
| **H07C offset blades** | | | | | | | | | | | |
| 2-30 | 1.38 (35) | 0.56 (14) | 3.38 (85) | 0.38 (9) | 0.06 (1) | 2.88 (73) | 0.22 (6) | 0.31 (8) | 0.56 (14) | — | HRCII-C |
| **K07C offset blades** | | | | | | | | | | | |
| 40-60 | 2.19 (56) | 0.88 (22) | 3.44 (87) | 0.5 (13) | 0.06 (1) | 2.88 (73) | 0.22 (6) | 0.31 (8) | 0.88 (22) | — | HRCII-C |
| 80-100 | 2.19 (56) | 0.88 (22) | 3.75 (95) | 0.5 (13) | 0.06 (1) | 2.88 (73) | 0.22 (6) | 0.31 (8) | 0.88 (22) | — | HRCII-MISC |
| **L14C offset blades** | | | | | | | | | | | |
| 80-100 | 2.38 (60) | 0.88 (21) | 4.38 (111) | 0.56 (14) | 0.13 (3) | 3.69 (94) | 0.34 (9) | 0.44 (11) | 1 (25) | — | HRCII-C |
| **M14C offset blades** | | | | | | | | | | | |
| 125-200 | 2.56 (65) | 1.5 (38) | 4.38 (111) | 0.75 (19) | 0.09 (2) | 3.69 (94) | 0.34 (9) | 0.44 (11) | — | — | HRCII-MISC |
| **L09C center blades** | | | | | | | | | | | |
| 80-100 | 2.38 (60) | 0.88 (21) | 5 (127) | 0.56 (14) | 0.13 (3) | 4.38 (111) | 0.34 (9) | 0.44 (11) | — | — | HRCII-MISC |
| **M09C center blades** | | | | | | | | | | | |
| 125-200 | 2.56 (65) | 1.5 (38) | 5.38 (136) | 0.75 (19) | 0.13 (3) | 4.38 (111) | 0.34 (9) | 0.56 (14) | — | — | HRCII-C |
| **P09C center blades** | | | | | | | | | | | |
| 250-400 | 3.06 (178) | 2.31 (59) | 5.38 (136) | 1 (25) | 0.19 (5) | 4.38 (111) | 0.34 (9) | 0.5 (13) | — | — | HRCII-MISC |
| **P11C center blades** | | | | | | | | | | | |
| 250-400 | 3.06 (178) | 2.31 (59) | 8.25 (210) | 1 (25) | 0.19 (5) | 5.25 (133) | 0.41 (10) | 0.63 (16) | — | 1 (25) | HRCII-C |
| **R11C center blades** | | | | | | | | | | | |
| 450-600 | 3.19 (81) | 2.88 (73) | 8.25 (210) | 1 (25) | 0.25 (6) | 5.25 (133) | 0.41 (10) | 0.63 (16) | — | 1 (25) | HRCII-C |

**Data sheet no. 4131**

## SSD, NSD, ESD BS88 Part 1 fuses

The NSD and ESD are low voltage offset blade, ceramic body fuses complying with general purpose gG characteristics.

### Ratings

- Volts 240-550 Vac
- Amps
  - 2-63 A
  - 20M25 to 63M100 motor starter ratings
- IR
  - 33 kA (SSD)
  - 80 kA (NSD, ESD)

### Agency information

- Meets the requirements of BS88 Part 1 and IEC 60269-1, CE

| Catalog no.* | | | |
|---|---|---|---|
| **Catalog symbol** | **Amps (class)** | **Max Vac** | **BS88 ref.** |
| SSD | 2, 4, 6, 10, 16, 20, 25, 32 (gG) | 240 | E1 |
| NSD† | 2, 4, 6, 10, 16, 20, 25, 32 (gG) | 550 | F1 |
| | 20M25, 20M32, 20M36, 32M36, 32M40, 32M50, 32M63 (gM) | 415 | |
| ESD† | 2, 4, 6, 10, 16, 20, 25, 32 (gG) | 550 | F2 |
| | 40, 50, 63 (gG) | 415 | |
| | 63M80, 63M100 (gM) | | |

* To order, specify catalog symbol and amp rating, e.g., SSD20.
† "M" indicates motor starter ratings.

### Recommended fuse holders

| Fuse symbol | Catalog no. |
|---|---|
| NSD | 32NNSF |
| ESD | 63ENSF |

**Data sheet no. 4105 (SSD), 4100 (NSD) and 4101 (ESD)**

## STD, NITD, AAO, BAO, OSD, CEO, DEO BS88 Part 1 fuses

The STD to DEO type ceramic body, offset bolt-on blade low voltage fuses complying with general purpose gG characteristics.

### Ratings

- Volts 240-550 Vac
- Amps
  - 2-200 A
  - 20M25 to 200M315 motor starter ratings
- IR
  - 33 kA (STD)
  - 80 kA (NITD, AAO, BAO, CEO, DEO, OSD)

### Agency information

- Meets the requirements of BS88 Part 1 and IEC 60269-1, CE

| Catalog no.* | | | |
|---|---|---|---|
| **Catalog symbol** | **Amps (class)** | **Max Vac** | **BS88 ref.** |
| STD | 2, 4, 6, 10, 16, 20, 25, 32 (gG) | 240 | — |
| NITD† | 2, 4, 6, 10, 16, 20, 25, 32 (gG) | 550 | — |
| | 20M25, 20M32 (gM) | | |
| | 32M40, 32M50, 32M63 (gM) | 415 | |
| AAO† | 2, 4, 6, 10, 16, 20, 25, 32, (gG) | 550 | A2 |
| | 32M40, 32M50, 32M63 (gM) | 500 | |
| BAO† | 40, 50, 63 (gG) | 500 | A3 |
| | 63M80, 63M100 (gM) | | |
| CEO† | 32, 40, 50, 63, 80, 100 (gG) | 550 | A4 |
| | 100M125, 100M160, 100M200 (gM) | 415 | |
| DEO† | 125, 160, 200 (gG) | 415 | — |
| | 200M315 (gM) | | |
| OSD† | 80, 100 (gG) | 500 | — |
| | 100M125, 100M160 (gM) | 415 | |

* To order, specify basic catalog symbol and amp rating. E.g., BAO16.
† "M" indicates motor starter ratings.

### Typical applications

- The STD type are used in 240 V street lighting cut-outs
- NITD to DEO types used for industrial and general purpose applications

### Recommended fuse blocks and holders

| Fuse catalog symbol | Block/holder catalog no.* |
|---|---|
| NITD | CM32FC, RS20_ |
| AAO | CM32F, RS32_ |
| BAO | CM63F, RS63_ |
| OSD | CM100F, RS100_ |
| CEO | BH-0111 |

* See data sheet no. 4132 (CM_), 10083 (RS_) and 1200 (BH-_).

**Data sheet no. 4123 (STD), 4106 (NITD), 4109 (AAO), 4112 (BAO), 4107 (OSD), 4115 (CEO) and 4117 (DEO)**

## AC, AD, BC, BD, CD, DD, ED, EFS BS88 fuses

Ceramic body, center blade two-hole bolt-on low voltage fuses that comply with general purpose gG characteristics and available up to 400 amps with two hole mount and up to 1250 amps with four hole mount.

### Ratings

- Volts
  - 415/550 Vac
  - 250 Vdc
- Amps
  - 2-400 A
  - 63M80 to 400M500 motor starter ratings
- IR see catalog numbers table

### Agency information

- Meets the requirements of BS88 Parts 1 and 2 and IEC 60269-1, CE

| Catalog no.* | | IR ( kA) | | Max volts | | |
|---|---|---|---|---|---|---|
| Catalog symbol | Amps (class) | AC | DC | AC | DC | BS88 ref. |
| AC | 2, 4, 6, 10, 16, 20 (gG) | 80 | 40 | 550 | 250 | — |
| | 25, 32 (gG) | | | 500 | | |
| AD | 2, 4, 6, 10, 16, 20 (gG) | 80 | 40 | 550 | 250 | — |
| | 25, 32 (gG) | | | 500 | | |
| BC† | 40, 50, 63 (gG) | 80 | 40 | 500 | 250 | — |
| | 63M80, 63M100 (gM) | | | | | |
| BD | 40, 50, 63 (gG) | 80 | 40 | 500 | 250 | — |
| CD† | CD80, CD100 (gG) | 80 | — | 500 | — | B1 |
| | 100M125, 100M160, 100M200 (gM) | | | 415 | — | |
| DD† | 125, 160, 200 (gG) | 80 | — | 415 | — | B2 |
| | 200M250, 200M315 (gM) | | | | | |
| ED† | 250, 315, 355, 400 (gG) | 80 | — | 415 | — | B3 B4 |
| | 315M400 (gM) | | | | | |
| | 400M500 (gM) | | | 550 | | |
| EFS | 125, 160, 200, 250, 315 (gG) | 80 | — | 415 | — | — |

* To order, specify catalog symbol and amp rating. E.g., BC40.
† "M" indicates motor starter ratings.

### Recommended fuse blocks

| Fuse catalog symbol | Modular block catalog no.* |
|---|---|
| AC | BH-0111 |
| AD | BH-____ |
| BC | BH-0111 |
| BD | BH-____ |
| CD | BH-____ |
| DD | BH-____ |
| ED | BH-1131 |

* See data sheet no. 1200 (BH-0_) and 1201 (BH-1_) for details.

**Data sheets no. 4110 (AC), 4111 (AD), 4113 (BC), 4114 (BD), 4116 (CD), 4118 (DD), 4119 (ED) and 4121 (EFS)**

## EF, FF, FG, GF, GG, GH BS88 fuses

Ceramic body, center blade four-hole bolt-on low voltage fuses complying with general purpose gG characteristics and available up to 400 amps with two hole mount and up to 1250 amps with four hole mount.

### Ratings (see catalog numbers table)

- Volts
  - 415/690 Vac
  - 250/400 Vdc
- Amps 355-1250 A
- IR see catalog numbers table

### Agency information

- Meets the requirements of BS88 Parts 1 and 2 and IEC 60269-1, CE

| Catalog no.* | | IR ( kA) | | Max volts | | |
|---|---|---|---|---|---|---|
| Catalog symbol | Amps (class) | AC | DC | AC | DC | BS88 ref. |
| EF† | 355, 400 (gG) | 80 | 40 | 415 | — | C1 |
| | 400M500 (gM) | | | 550 | | |
| FF | 450, 500, 560, 630 (gG) | 80 | 40 | 550 | 400 | C2 |
| FG | 450, 500, 560, 630 (gG) | 80 | 40 | 550 | 400 | — |
| GF | 710, 800 (gG) | 80 | 40 | 550 | 250 | C3 |
| GG | 710, 800 (gG) | 80 | 40 | 550 | 250 | — |
| | 1000, 1250 (gG) | | — | | — | |
| GH | 710, 800, 1000, 1250 | 80 | — | 550 | — | D1 |

* To order, specify catalog symbol and amp rating, e.g., FG450.
† "M" indicates motor starter ratings.

**Data sheet no. 4120 (EF), 4102 (FF), 4122 (FG), 4103 (GF), 4104 (GG) and 4108 (GH)**

## D16, D27, D33, D125 DIN Type D Diazed fuses

DIN style Type D ceramic body low voltage fuses.

### Ratings

- Volts 500 Vac
- Amps 2-100 A
- IR 50 kA

### Agency information

- IEC 60269 and DIN 49515, CE

| Catalog no. | Amps | "D" dimension | Color code | Fig. |
|---|---|---|---|---|
| 2D16 | 2 | 6 | Pink | 1 |
| 4D16 | 4 | 6 | Brown | |
| 6D16 | 6 | 6 | Green | |
| 10D16 | 10 | 8 | Red | |
| 16D16 | 16 | 10 | Grey | |
| 20D16 | 20 | 12 | Blue | |
| 25D16 | 25 | 14 | Yellow | |
| 2D27 | 2 | 6 | Pink | 2 |
| 4D27 | 4 | 6 | Brown | |
| 6D27 | 6 | 6 | Green | |
| 10D27 | 10 | 8 | Red | |
| 16D27 | 16 | 10 | Grey | |
| 20D27 | 20 | 12 | Blue | |
| 25D27 | 25 | 14 | Yellow | |
| 35D33 | 35 | 16 | Black | 3 |
| 50D33 | 50 | 18 | White | |
| 63D33 | 63 | 20 | Copper | |
| 80D125 | 80 | 5 | Silver | 4 |
| 100D125 | 100 | 7 | Red | |

Additional 500 V quick acting fuses in body sizes D16, D27, D33 and D125 rated 2-100 A. Reference number suffixed "Q." E.g., 10D27**Q**.

Gauge rings and keys can also be supplied.

### Dimensions — mm

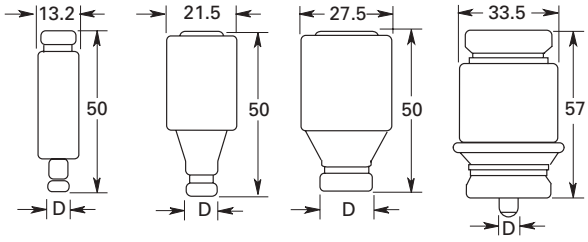


Fig. 1 Fig. 2 Fig. 3 Fig. 4

## NZ01, NZ02 DIN Type N Neozed fuses

DIN style Type N ceramic body low voltage.

### Ratings

- Volts 400 Vac
- Amps 2-63 A
- IR 50 kA

### Agency information

- IEC 60269 and DIN 49515, CE

| Catalog no. | Amps | "D" dimension | Color code |
|---|---|---|---|
| 2NZ01 | 2 | 11 | Pink |
| 4NZ01 | 4 | 11 | Brown |
| 6NZ01 | 6 | 11 | Green |
| 10NZ01 | 10 | 11 | Red |
| 16NZ01 | 16 | 11 | Grey |
| 20NZ02 | 20 | 15 | Blue |
| 25NZ02 | 25 | 15 | Yellow |
| 35NZ02 | 35 | 15 | Black |
| 50NZ02 | 50 | 15 | White |
| 63NZ02 | 63 | 15 | Copper |

### Dimensions — mm

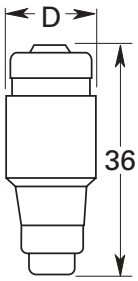





Data sheet no. 4124

## ___NHG___B NH HRC fuses

DIN 000 to 4 Class: gG/gL DIN square bodied, dual indication industrial fuses with voltage conducting metal gripping lugs. They are made of a steatite insulator, corrosion-proof (aluminum) metal parts with full-contact and silver-plated copper blades. All NHG fuses feature a selectivity ratio: 1:1.6 up to 500 Vac.

### Ratings

- Volts
  - 500 Vac
  - 690 Vac
- Amps 2-1250 A
- IR 120 kA
- Frequency
  - 45-62 Hz operating

### Agency information

- IEC 60269, VDE 0636, DIN 43620
- CE (500 Vac only)

### Dimensions — mm

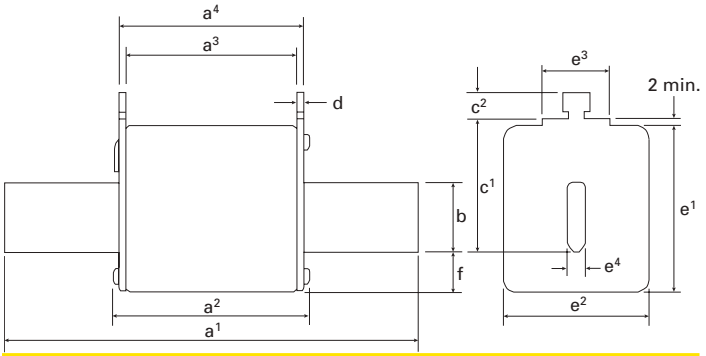


| Fuse size | a1 | a2 | a3 | a4 | b | c1 | c2 | D | e1 | e2 | e3 | e4 | f |
|---|---|---|---|---|---|---|---|---|---|---|---|---|---|
| 000 | 79 | 54 | 45 | 49 | 15 | 35 | 10 | 2 | 41 | 21 | 16 | 6 | 8 |
| 00 | 79 | 54 | 45 | 49 | 15 | 35 | 11 | 7.0 | 48 | 30 | 25 | 6 | 15 |
| 0 | 125 | 68 | 62 | 68 | 15 | 35 | 11 | 2.5 | 48 | 30 | 25 | 6 | 15 |
| 01 | 135 | 75 | 62 | 68 | 15 | 40 | 11 | 2.5 | 48 | 30 | 25 | 6 | 15 |
| 1 | 135 | 75 | 62 | 68 | 20 | 40 | 11 | 2.5 | 53 | 52 | 25 | 6 | 15 |
| 02 | 150 | 75 | 62 | 68 | 20 | 48 | 11 | 2.5 | 53 | 52 | 25 | 6 | 15 |
| 2 | 150 | 75 | 62 | 68 | 25 | 48 | 11 | 2.5 | 61 | 60 | 25 | 6 | 15 |
| 03 | 150 | 75 | 62 | 68 | 25 | 60 | 11 | 2.5 | 61 | 60 | 25 | 6 | 15 |
| 3 | 150 | 75 | 62 | 68 | 32 | 60 | 11 | 3.0 | 75 | 70 | 25 | 6 | 18 |
| 4 | 200 | 84 | 80 | 90 | 50 | 85 | 11 | 3 | 120 | 87 | — | 8 | 30 |

### Recommended fuse blocks

| Block catalog no. | Fuse size |
|---|---|
| SD00-D | 000-00 |
| SD1-D | 1*, 1 |
| SD2-D | 02, 2, 03, 3 |

## ___NHG___B NH HRC fuses

### 500 Vac gG/gL dual indicator voltage conducting metal gripping lugs

| Amps | Catalog no. |
|---|---|
| **000 size** | |
| 2 | 2NHG000B |
| 4 | 4NHG000B |
| 6 | 6NHG000B |
| 10 | 10NHG000B |
| 16 | 16NHG000B |
| 20 | 20NHG000B |
| 25 | 25NHG000B |
| 32 | 32NHG000B |
| 35 | 35NHG000B |
| 40 | 40NHG000B |
| 50 | 50NHG000B |
| 63 | 63NHG000B |
| 80 | 80NHG000B |
| 100 | 100NHG000B |
| **00 size** | |
| 50 | 50NHG00B |
| 63 | 63NHG00B |
| 80 | 80NHG00B |
| 100 | 100NHG00B |
| 125 | 125NHG00B |
| 160 | 160NHG00B |
| **0 size** | |
| 6 | 6NHG0B |
| 10 | 10NHG0B |
| 16 | 16NHG0B |
| 20 | 20NHG0B |
| 25 | 25NHG0B |
| 32 | 32NHG0B |
| 35 | 35NHG0B |
| 40 | 40NHG0B |
| 50 | 50NHG0B |
| 63 | 63NHG0B |
| 80 | 80NHG0B |
| 100 | 100NHG0B |
| 125 | 125NHG0B |
| 160 | 160NHG0B |
| **01 size** | |
| 6 | 6NHG01B |
| 10 | 10NHG01B |
| 16 | 16NHG01B |
| 20 | 20NHG01B |
| 25 | 25NHG01B |
| 32 | 32NHG01B |
| 35 | 35NHG01B |
| 40 | 40NHG01B |
| 50 | 50NHG01B |
| 63 | 63NHG01B |
| 80 | 80NHG01B |
| 100 | 100NHG01B |
| 125 | 125NHG01B |
| 160 | 160NHG01B |

| Amps | Catalog no. |
|---|---|
| **1 size** | |
| 50 | 50NHG1B |
| 63 | 63NHG1B |
| 80 | 80NHG1B |
| 100 | 100NHG1B |
| 125 | 125NHG1B |
| 160 | 160NHG1B |
| 200 | 200NHG1B |
| 224 | 224NHG1B |
| 250 | 250NHG1B |
| 315 | 315NHG1B |
| 355 | 355NHG1B |
| **02 size** | |
| 35 | 35NHG02B |
| 40 | 40NHG02B |
| 50 | 50NHG02B |
| 63 | 63NHG02B |
| 80 | 80NHG02B |
| 100 | 100NHG02B |
| 125 | 125NHG02B |
| 160 | 160NHG02B |
| 200 | 200NHG02B |
| 224 | 224NHG02B |
| 250 | 250NHG02B |
| **2 size** | |
| 250 | 250NHG2B |
| 300 | 300NHG2B |
| 315 | 315NHG2B |
| 355 | 355NHG2B |
| 400 | 400NHG2B |
| 425 | 425NHG2B |
| 450 | 450NHG2B |
| 500 | 500NHG2B |
| **03 size** | |
| 250 | 250NHG03B |
| 315 | 315NHG03B |
| 355 | 355NHG03B |
| 400 | 400NHG03B |
| **3 size** | |
| 315 | 315NHG3B |
| 355 | 355NHG3B |
| 400 | 400NHG3B |
| 425 | 425NHG3B |
| 450 | 450NHG3B |
| 500 | 500NHG3B |
| 630 | 630NHG3B |
| 800 | 800NHG3B |
| **4 size*** | |
| 500 | 500NHG4G |
| 630 | 630NHG4G |
| 800 | 800NHG4G |
| 1000 | 1000NHG4G |
| 1250 | 1250NHG4G |

* Size 4 is a a single indicator fuse with slotted end blades.

**Data sheet no. 10164 (500 V), 720109 (690 V)**

## ___NHG___B NH HRC fuses

**690 Vac gG/gL dual indicator voltage conducting metal gripping lugs**

| Amps | Catalog no. |
|---|---|
| **000 size** | |
| 2 | 2NHG000B-690 |
| 4 | 4NHG000B-690 |
| 6 | 6NHG000B-690 |
| 10 | 10NHG000B-690 |
| 16 | 16NHG000B-690 |
| 20 | 20NHG000B-690 |
| 25 | 25NHG000B-690 |
| 32 | 32NHG000B-690 |
| 35 | 35NHG000B-690 |
| 40 | 40NHG000B-690 |
| 50 | 50NHG000B-690 |
| 63 | 63NHG000B-690 |
| **00 size** | |
| 50 | 50NHG00B-690 |
| 63 | 63NHG00B-690 |
| 80 | 80NHG00B-690 |
| 100 | 100NHG00B-690 |
| 125 | 125NHG00B-690 |
| 160* | 160NHG00B-690 |
| **1 size** | |
| 50 | 50NHG1B-690 |
| 63 | 63NHG1B-690 |
| 80 | 80NHG1B-690 |
| 100 | 100NHG1B-690 |
| 125 | 125NHG1B-690 |
| 160 | 160NHG1B-690 |
| 200 | 200NHG1B-690 |
| 224 | 224NHG1B-690 |
| 250 | 250NHG1B-690 |

| Amps | Catalog no. |
|---|---|
| **2 size** | |
| 200 | 200NHG2B-690 |
| 224 | 224NHG2B-690 |
| 250 | 250NHG2B-690 |
| 315 | 315NHG2B-690 |
| **3 size** | |
| 250 | 250NHG3B-690 |
| 315 | 315NHG3B-690 |
| 355 | 355NHG3B-690 |
| 400 | 400NHG3B-690 |
| 425 | 425NHG3B-690 |
| 500 | 500NHG3B-690 |
| **4 size**** | |
| 630 | 630NHG4B-690 |
| 800 | 800NHG4B-690 |

* 160 amps rated at 660 Vac.
**Size 4 is a single indicator fuse with slotted end blades.

## JKS-700 fast-acting fuses

The JKS-700 is a fast-acting, current-limiting fuse that is UL Recognized and has CSA Component Acceptance for applications up to 700 Vac. The JKS-700 is available in ratings up to 60 amps with the same dimensions as a standard Class J fuses; but its voltage rating places it outside the standard Class J fuse class.

Bussmann recommends the JM70100 modular fuse block and the JM70100-MW power distribution fuse block for the 30 amp case size JKS-700 fuses. See page 8-18 for details.

### Ratings

- Volts 700 Vac (or less)
- Amps 25-60 A
- IR
  - Minimum $6I_n$
  - 200 kA RMS Sym.

### Operating class aR

### Agency information

- UL Recognized, 248-13 Semiconductor Fuses, File E56412
- CSA Component Acceptance, C22.2 No 248.13 Semiconductor Fuses, Class 1422-30

### Features

- Current limitation for non-inductive circuits provides current-limiting response to maximum ground fault and short-circuit conditions
- 200 kA interrupting rating provides protection at all circuit locations
- Economical circuit protection for high-fault current circuits

### Typical applications

- Power panelboards up to 700 Vac
- Machinery disconnects up to 700 Vac

| Catalog no. (amps) | | | |
|---|---|---|---|
| JKS-25-700 | JKS-30-700 | JKS-35-700 | JKS-60-700 |



**Data sheet no. 10164 (500 V), 720109 (690 V)**

**Data sheet no. 1026**

## SD_ and TD_ NH fuse blocks

NH fuse bases feature thermoplastic bodies, and DIN-Rail and screw mounting (size 4 is screw fix). They are available with a range of protection accessories for live parts for IP20 protection.

### Ratings

- Volts
  - 690 Vac
  - 1000 Vac (SD1-D only)
- Amps up to 1250 A
- NH fuse sizes 000 to 4

### Agency information

- IEC 60269-1 and 2
- VDE 0636-1 and 2

### Typical applications

- Protecting industrial circuits and electrical apparatus

| Catalog no. | | | | | |
|---|---|---|---|---|---|
| Fuse size | Poles | Amps | Catalog no. | Carton qty. | Accepts fuse sizes |
| **DIN-Rail or screw mount** | | | | | |
| 00 | 1 | 160 | SD00-D | 3 | 000 and 00 |
| | 3 | | TD00-D | 1 | |
| 1 | 1 | 250 | SD1-D | 3 | 01 and 1 |
| | 3 | | TD1-D | 1 | |
| 2 | 1 | 400 | SD2-D | 3 | 02 and 2 |
| | 3 | | TD2-D | 1 | |
| 3 | 1 | 630 | SD3-D | 3 | 03 and 3 |
| | 3 | | TD3-D | 1 | |
| **Screw mount only** | | | | | |
| 4 | 1 | 1250 | SD4-S | 3 | 4 |

### Neutrals

| NH size | Amps | Catalog no. | Carton qty. |
|---|---|---|---|
| 1 | 250 | SDL-1 | 3 |
| 2 | 400 | SDL-2 | 3 |
| 3 | 630 | SDL-3 | 3 |

### Fuse extraction handle

| Size | Catalog no. | Carton qty. |
|---|---|---|
| C00-3 | FEH | 1 |

### Shroud kits

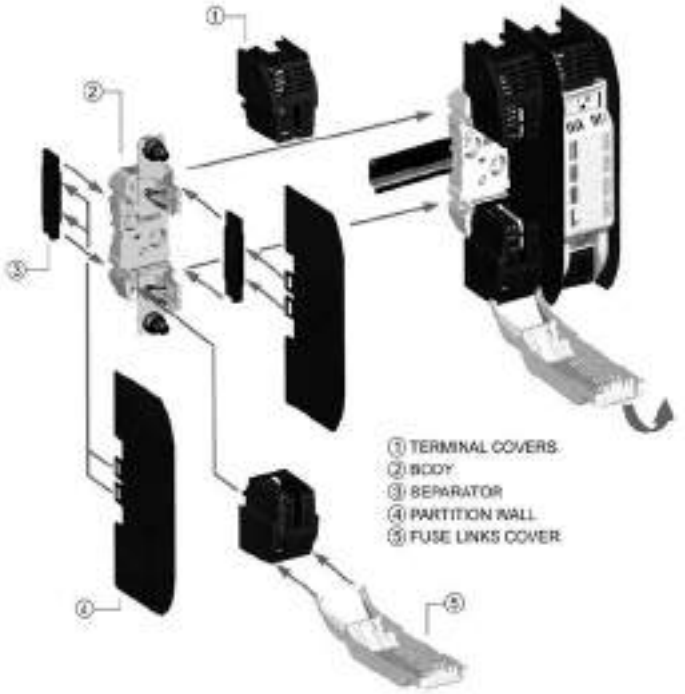


| Catalog no. | Fits fuse block |
|---|---|
| TD00-IP20 | TD00-D |
| TD1-IP20 | TD1-D |
| TD2-IP20 | TD2-D |
| TD3-IP20 | TD3-D |
| SD00-SK | SD00-D |
| SD12-SK | SD1 and SD2 |
| SD3-SK | SD3 |

### Phase barrier kits

| Catalog no. | Fits fuse block |
|---|---|
| SD00-PB | SD00-D |
| SD12-PB* | SD1 and SD2 |
| SD3-PB* | SD3 |

* Kits include 2 phase barriers and 2 ganging links.

**Data sheet 10163**

## Class gG IEC 60269 industrial ferrule fuses

10 to 22mm diameter IEC Class gG fuses with optional indicators (10x38mm only) and strikers. See catalog numbers for availability and ratings.

### 10x38mm, Class gG, 500 and 400 Vac, 0.5 to 50 A

| Catalog no. | | | | | |
|---|---|---|---|---|---|
| **Standard** | **W/ indicator** | **Vac** | **Amps** | **IR (kA)** | **Holder/block** |
| C10G0.5 | — | | 0.5 | | |
| C10G1 | — | | 1 | | |
| C10G2 | — | | 2 | | |
| C10G4 | — | | 4 | | |
| C10G6 | — | | 6 | | |
| C10G8 | — | 500 | 8 | | |
| C10G10 | — | | 10 | | |
| C10G12 | — | | 12 | 120 | CHM DIN-Rail*, BMM block |
| C10G16 | — | | 16 | | |
| C10G20 | — | | 20 | | |
| C10G25 | — | | 25 | | |
| C10G32 | — | 400 | 32 | | |
| C10G32 | — | 400 | 32 | | |
| — | C10G321 | 500 | 32 | | |
| — | C10G40I | 500 | 40 | | |
| — | C10G50I | 400 | 50 | | |

* Not recommended for use with indicator version.

### 14x51mm, Class gG, 400, 500 and 690 Vac, 1 to 50 A

| Catalog no. | | | | | |
|---|---|---|---|---|---|
| **Standard** | **W/ striker** | **Vac** | **Amps** | **IR ( kA)** | **Holder** |
| C14G1 | — | 690 | 1 | 80 | |
| C14G2 | — | | 2 | | |
| — | C14G2S | 500 | | 120 | |
| C14G4 | — | 690 | 4 | 80 | |
| — | C14G4S | 500 | | 120 | |
| C14G6 | — | 690 | 6 | 80 | |
| — | C14G6S | 500 | | 120 | |
| C14G8 | — | 690 | 8 | 80 | |
| — | C14G8S | 500 | | 120 | |
| C14G10 | — | 690 | 10 | 80 | |
| — | C14G10S | 500 | | 120 | |
| C14G12 | — | 690 | 12 | 80 | CH14 DIN-Rail** |
| — | C14G12S | 500 | | 120 | |
| C14G16 | — | 690 | 16 | 80 | |
| — | C14G16S | 500 | | 120 | |
| C14G20 | — | 690 | 20 | 80 | |
| — | C14G20S | 500 | | 120 | |
| C14G25 | — | 690 | 25 | 80 | |
| — | C14G25S | | | | |
| C14G32 | C14G32S | 500 | 32 | 120 | |
| C14G40 | C14G40S | | 40 | | |
| C14G50 | C14G50S | 400 | 50 | | |

**Not recommended for use with indicator version, use striker version to actuate optional, external microswitch

### 22x58mm, Class gG, 400, 500 and 690 Vac, 2 to 125 A

| Catalog no. | | | | | |
|---|---|---|---|---|---|
| **Standard** | **W/ striker** | **Vac** | **Amps** | **IR (kA)** | **Holder/block** |
| C22G2 | — | | 2 | | |
| C22G4 | C22G4S | | 4 | | |
| C22G6 | C22G6S | | 6 | | |
| C22G8 | C22G8S | | 8 | | |
| C22G10 | C22G10S | | 10 | | |
| C22G12 | C22G12S | | 12 | | |
| C22G16 | C22G16S | 690 | 16 | 80 | CH22 DIN-Rail*, JM70100 block |
| C22G20 | C22G20S | | 20 | | |
| C22G25 | C22G25S | | 25 | | |
| C22G32 | C22G32S | | 32 | | |
| C22G40 | C22G40S | | 40 | | |
| C22G50 | C22G50S | | 50 | | |
| C22G63 | C22G63S | | 63 | | |
| C22G80 | C22G80S | 500 | 80 | | |
| C22G100 | C22G100S | | 100 | 120 | |
| C22G125 | C22G125S | 400 | 125 | | |

* Use striker version to actuate optional, external microswitch.

### Dimensions — mm

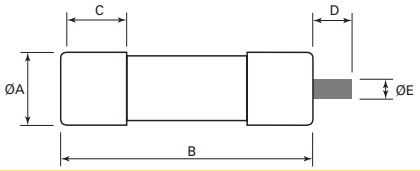


| Catalog symbol | Ø A | B | C | Indicator/striker D | Indicator/striker Ø E |
|---|---|---|---|---|---|
| C10G | 10 | 38 | 10 | — | — |
| C14G | 14.3 | 51 | 13 | 8 | 4 |
| C22G | 22 | 58 | 16 | 8 | 4 |



Data sheet no. 720115

## Class aM IEC 60269 industrial ferrule fuses

10 to 22mm diameter IEC Class aM fuses with optional indicators (22x58mm only) and strikers. See catalog numbers for availability and ratings.

### 10x38mm, Class aM, 500 and 400 Vac, 0.25 to 25 A

| Catalog no. | | | | |
|---|---|---|---|---|
| **Standard** | **Vac** | **Amps** | **IR (kA)** | **Holder/block** |
| C10M0.5 | 500 | 0.5 | 120 | CHM Din-Rail, BMM block |
| C10M1 | | 1 | | |
| C10M2 | | 2 | | |
| C10M4 | | 4 | | |
| C10M6 | | 6 | | |
| C10M8 | | 8 | | |
| C10M10 | | 10 | | |
| C10M12 | | 12 | | |
| C10M16 | | 16 | | |
| C10M20 | 400 | 20 | | |
| C10M25 | | 25 | | |

### 14x51mm, Class aM, 400, 500 and 690 Vac, 0.25 to 50 A

| Catalog no. | | | | | |
|---|---|---|---|---|---|
| **Standard** | **W/ striker** | **Vac** | **Amps** | **IR (kA)** | **Holder** |
| C14M0.25 | — | 690 | 0.25 | | CH14 DIN-Rail** |
| C14M0.5 | — | | 0.5 | | |
| C14M1 | — | | 1 | 80 | |
| C14M2 | — | | 2 | 80 | |
| — | C14M2S | 500 | | 120 | |
| C14M4 | — | 690 | 4 | 80 | |
| — | C14M4S | 500 | | 120 | |
| C14M6 | — | 690 | 6 | 80 | |
| — | C14M6S | 500 | | 120 | |
| C14M8 | — | 690 | 8 | 80 | |
| — | C14M8S | 500 | | 120 | |
| C14M10 | — | 690 | 10 | 80 | |
| — | C14M10S | 500 | | 120 | |
| C14M12 | — | 690 | 12 | 80 | |
| — | C14M12S | 500 | | 120 | |
| C14M16 | — | 690 | 16 | 80 | |
| — | C14M16S | 500 | | 120 | |
| C14M20 | — | 690 | 20 | 80 | |
| — | C14M20S | 500 | | 120 | |
| C14M25 | — | 690 | 25 | 80 | |
| — | C14M25S | 500 | | 120 | |
| C14M32 | C14M32S | | 32 | | |
| C14M40 | C14M40S | | 40 | | |
| C14M50 | C14M50S | 400 | 50 | | |

**Use striker version to actuate optional, external microswitch.

### 22x58mm, Class aM, 400, 500 and 690 Vac, 2 to 125 A

| Catalog no. | | | | | | |
|---|---|---|---|---|---|---|
| **Standard** | **W/ indicator** | **W/ striker** | **Vac** | **Amps** | **IR (kA)** | **Holder/block** |
| C22M2 | — | — | 690 | 2 | 80 | CH22 DIN-Rail*, JM70100 block |
| C22M4 | — | — | | 4 | | |
| C22M6 | — | — | | 6 | | |
| C22M8 | — | — | | 8 | | |
| C22M10 | — | — | | 10 | | |
| C22M12 | — | C22M12S | | 12 | | |
| C22M16 | — | C22M16S | | 16 | | |
| C22M20 | — | C22M20S | | 20 | | |
| C22M25 | — | C22M25S | | 25 | | |
| C22M32 | — | C22M32S | | 32 | | |
| C22M40 | — | C22M40S | | 40 | | |
| C22M50 | — | C22M50S | | 50 | | |
| C22M63 | — | C22M63S | | 63 | | |
| C22M80 | — | C22M80S | 500 | 80 | 120 | |
| C22M100 | — | C22M100S | | 100 | | |
| C22M125 | C22M125I | C22M125S | 400 | 125 | | |

* Not recommended for use with indicator version, use striker version to actuate optional, external microswitch.

### Dimensions — mm

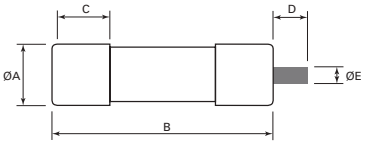


| Catalog symbol | Ø A | B | C | Indicator/striker D | Indicator/striker Ø E |
|---|---|---|---|---|---|
| C10M | 10 | 38 | 10 | — | — |
| C14M | 14.3 | 51 | 13 | 8 | 4 |
| C22M | 22 | 58 | 16 | 8 | 4 |

**Data sheet no. 720115**

## HRC fuse holders

### CAMaster

The Bussmann series CAMaster HRC fuse holder features a unique cam-action for easy fuse removal while allowing significantly improved contact pressure between fuse carrier and base contact that enhances electrical performance. A range of lockable safety carriers for the fuse holder (catalog reference LSC), are available.

### Ratings

- Volts 690 V
- Amps up to 100 A

### Agency information

- CSA C22.2 No. 39; IEC 269 and BS88, CE

| Catalog no. | Amps | Details for | Fuses accepted |
|---|---|---|---|
| CM20CF | 30 | HRCI-CA applications | _CIF21 |
| CM30CF | 30 | | _H07C |
| CM60CF | 60 | HRCII applications | _K07C |
| CM100CF | 100 | | _K07CR |

### Accessories

| Catalog no. | Amps | Description | CAMaster accepted |
|---|---|---|---|
| 20BS | 30 | Back stud | CM20CF |
| 32BS | 30 | | CM30CF |
| 60/100BS | 60/100 | | CM60/100CF |
| GLP | All | Ganging link kit | 3-Pole |
| 20LSC | 30 | Security carrier with clip | CM20CF |
| 32LSCC | 30 | | CM30CF |
| 63/100LSC | 60/100 | | CM60/100CF |

### SAFEloc

The Bussmann series SAFEloc HRC fuse holders (for use with HRCI-CB fuses) provides a positive, stress-free fuse fitting and locks it in position to ensure safe insertion and withdrawal from the base. Base contacts are fully shrouded to help protect against electric shock. Shrouds utilize simple slide/snap action allowing access to the contact terminal screws. It can be mounted on a 35mm DIN-Rail or panel-mounted with a single screw.

### Ratings

- Volts 600 V
- Amps 30-60 A

### Agency information

- Designed to accommodate the compact range of offset blade fuse to CSA C22.2 No. 106, HRCI-CB, CE

| Catalog no.* | Amps | Connection | Fuses accepted |
|---|---|---|---|
| C30F | 30 | Front | _CIF06 |
| C30BS | | Back | |
| C30FBS | | Front-back | |
| C60F | 60 | Front | EK-(amp) |
| C60BS | | Back | |
| C60FBS | | Front-back | |

* For use with HRCI-CB fuses.



## Bussmann series Red Spot fuse holders

These versatile CSA Certified and IP20 finger-safe fuse holders for BS88 HRC industrial fuses are available in ratings from 20 to 400 amps.

Padlock inserts, warning carriers and fuse adapter accessories enhance safety and application flexibility.

See data sheet no. 10083 for details.

BUSSMANN SERIES

# Enhanced safety.
# Improved system reliability.
# Simplified inventory.

It's easier than ever to improve your circuit protection while efficiently reducing your fuse inventory.

Leveraging Bussmann™ series ultimate protection fuses, our Low-Peak™ Upgrade program couples the industry's most advanced circuit protection with our extensive knowledge to deliver enganced safety, improved system reliability and simplified inventory.

In just three simple steps, you'll save time and increase productivity. All by using Bussmann series Low-Peak fuses.

Three steps to ultimate protection:

1 Audit

2 Analyze

3 Implement

Visit Eaton.com/bussmannseries to learn more.

EATON
Powering Business Worldwide

Follow us on social media to get the latest product and support information.

# Complete and reliable solar circuit protection

## Contents


| Description | | | | Section page |
|---|---|---|---|---|
| **Fuses** | **Fuse size** | **Volts** | **Amps** | |
| PVM | 13/32" x 1-1/2" | 600 | 4-30 | 2 |
| PVS-R | RK5 | 600 | 20-400 | |
| PV-_A10_ | 10x38mm | 1000 | 1-20 | 3 |
| HPV | In-line assembly | 1000/1500 | 1-20 | 4 |
| PV-_A14F | 14x51mm | 1000/1100 | 15-32 | |
| PV-_ANH_ | NH1, 2, 3 | 1000 | 32-400 | 5 |
| PV-_A10F85L | 10x85mm | 1500 | 2.25-25 | 6 |
| PV15M-4A-CT | Crimp terminal | 1500 | 4 | |
| PV-_A-_XL | XL 01, 1, 2, 3 | 1000/1500 | 50-600 | 7 |
| **Holder** | **Fuse size** | **Volts** | **Amps** | |
| CHPV_ | 10x38mm | 1000 | 30 | 8 |
| **Blocks** | **Fuse size** | **Volts** | **Amps** | |
| BPVM-_ | 10x38mm | 1000 | 30 | 9 |
| CHPV15L85 | 10x85 and 14x85mm | 1500 | 32 | 10 |
| SB_XL-_ | 01XL to 3L | 1500 | Up to 630 | |
| SD_-D-PV and TD_D-PV | NH1, 2, 3 | 1500 | Up to 630 | 11 |

## PVM 600 Vdc 13/32" x 1-1/2" midget PV fuses

A range of UL 248-19 fast-acting 600 Vdc 13/32" x 1-1/2" (10x38mm) midget fuses specifically designed to protect solar power systems in extreme ambient temperature, high cycling and low level fault current conditions (reverse current, multi-array fault).

RoHS 2011/65/EU

### Ratings

- Volts 600 Vdc
- Amps 4-30 A
- IR 50 kA DC (4-30 A)

### Agency information

- UL Listed 248-19, Guide JFGA, File E335324, CSA Component Certified C22.2, RoHS compliant, CE

### Watts loss

| | | Power loss (watts) | |
|---|---|---|---|
| **Catalog no.** | **Amps** | **0.8 $I_n$** | **$I_n$** |
| PVM-10 | 10 | 1.0 | 1.9 |
| PVM-15 | 15 | 1.0 | 1.7 |
| PVM-30 | 30 | 1.6 | 2.9 |

| Catalog no. (amps) | | | |
|---|---|---|---|
| PVM-4 | PVM-7 | PVM-10 | PVM-20 |
| PVM-5 | PVM-8 | PVM-12 | PVM-25 |
| PVM-6 | PVM-9 | PVM-15 | PVM-30 |

### Features

- Specifically designed to protect photovoltaic systems in extreme ambient temperature per UL 248-19 listed
- Capable of withstanding high cycling and low level fault current conditions

### Typical applications

- Combiner boxes
- String protectors

Recommended fuse holders and blocks, see pages 6-8 and 6-9.

**Data sheet no. 2153**

## PVS-R 600 Vac/dc Class RK5 PV fuse

A range of UL 248-19 fast-acting 600 Vdc Class RK5 fuses specifically designed to protect photovoltaic power systems in extreme ambient temperature, high cycling and low level fault current conditions (reverse current, multi-array fault).

### Ratings

- Volts
  - 600 Vac to UL 248-12
  - 600 Vdc to UL 248-19
- Amps 20-400 A
- IR
  - 200 kA RMS Sym. AC
  - 20 kA DC (20-60 A)
  - 10 kA DC (70-400 A)

### Agency information

- UL Listed, Std. 248-12, Class RK5, Guide JFGA, File E335324. Photovoltaic to UL 248-19, CSA Component Certified C22.2, CE

| Catalog no. (amps) | | | |
|---|---|---|---|
| PVS-R-20 | PVS-R-60 | PVS-R-125 | PVS-R-300 |
| PVS-R-25 | PVS-R-70 | PVS-R-150 | PVS-R-350 |
| PVS-R-30 | PVS-R-80 | PVS-R-175 | PVS-R-400 |
| PVS-R-35 | PVS-R-90 | PVS-R-200 | |
| PVS-R-40 | PVS-R-100 | PVS-R-225 | |
| PVS-R-50 | PVS-R-110 | PVS-R-250 | |

### Features

- Current limitation for non-inductive circuits provides Class RK5 current-limiting response to ground fault and short-circuit conditions
- Designed for the protection and isolation of photovoltaic systems

### Typical applications

- Photovoltaic systems
- Inverters
- Photovoltaic system DC safety switches
- Recombiner boxes

Recommended fuse blocks, see page 8-19.

**Data sheet no. 4203**

## PV 1000 Vdc 10x38mm PV fuses

A range 10x38mm, 1000 Vdc PV fuses for the protection and isolation of photovoltaic strings that are specifically designed for use in PV systems with extreme ambient temperature, high cycling and low fault current conditions (reverse current, multi-array fault) string arrays. For application flexibility, the PV 10x38mm fuse is available as a cylindrical fuse as well as bolt-on, single and dual PCB tab and in-line crimp terminal versions.

### Ratings

- Volts 1000 Vdc
- Amps 1-20 A
- IR 50 kA

### Terminals and conductors

- Crimp connection for single, 75°C/90°C Cu Stranded 12-8 AWG PV wire

### Agency information

- UL Listed to 248-19†, Guide JFGA, File E335324, IEC 60269-6 (gPV), CSA File 53787, Class 1422-30 (1-15A), 20 A Pending, CCC (1-20 A), RoHS Compliant

† Except crimp terminal version that is UL Recognized to UL 248-19, Guide JFGA2, File E335324.

### Features

- Meets UL and IEC photovoltaic standards for global acceptance
- Low watts loss performance for energy efficiency
- Low temperature rise performance for more precise sizing
- In-line crimp terminal version is easy to apply in wire harness construction

### Typical applications

- Combiner boxes
- Inverters
- PV wire harnesses

### Recommended fuse blocks, holders and fuseclips

- BPVM modular fuse block with optional cover, see page 6-9
- CHPV 1- and 2-pole modular fuse holders with optional open fuse indication, see page 6-8
- 1A3400-09 PCB fuseclip, see page 3-16
- HPV in-line fuse holder assembly, see page 6-4

| Catalog no. (amp) | | | | | | $I^2t$ ($A^2s$) | | Watts loss | |
|---|---|---|---|---|---|---|---|---|---|
| Cylindrical | Bolt-on | PCB single pin | PCB double pin | Crimp terminal | Amps | Pre-arcing | Total @rated volts | 0.8 $I_n$ | $I_n$ |
| PV-1A10F | PV-1A10-T | PV-1A10-1P | PV-1A10-2P | PV-1A10F-CT | 1 | 0.15 | 0.4 | 0.8 | 1.5 |
| PV-2A10F | PV-2A10-T | PV-2A10-1P | PV-2A10-2P | PV-2A10F-CT | 2 | 1.2 | 3.4 | 0.6 | 1.0 |
| PV-3A10F | PV-3A10-T | PV-3A10-1P | PV-3A10-2P | PV31A10F-CT | 3 | 4 | 11 | 0.8 | 1.3 |
| PV-3-5A10F | PV-3-5A10-T | PV-3-5A10-1P | PV-3-5A10-2 | PV-3.5A10F-CT | 3.5 | 6.6 | 18 | 0.9 | 1.4 |
| PV-4A10F | PV-4A10-T | PV-4A10-1P | PV-4A10-2P | PV-4A10F-CT | 4 | 9.5 | 26 | 1.0 | 1.5 |
| PV-5A10F | PV-5A10-T | PV-5A10-1P | PV-5A10-2P | PV-5A10F-CT | 5 | 19 | 50 | 1.0 | 1.6 |
| PV-6A10F | PV-6A10-T | PV-6A10-1P | PV-6A10-2P | PV-6A10F-CT | 6 | 30 | 90 | 1.1 | 1.8 |
| PV-8A10F | PV-8A10-T | PV-8A10-1P | PV-8A10-2P | PV-8A10F-CT | 8 | 3 | 32 | 1.2 | 2.1 |
| PV-10A10F | PV-10A10-T | PV-10A10-1P | PV-10A10-2P | PV-10A10F-CT | 10 | 7 | 70 | 1.2 | 2.3 |
| PV-12A10F | PV-12A10-T | PV-12A10-1P | PV-12A10-2P | PV-12A10F-CT | 12 | 12 | 120 | 1.5 | 2.7 |
| PV-15A10F | PV-15A10-T | PV-15A10-1P | PV-15A10-2P | PV-15A10F-CT | 15 | 22 | 220 | 1.7 | 2.9 |
| PV-20A10F | PV-20A10-T | PV-20A10-1P | PV-20A10-2P | PV-20A10F-CT | 20 | 34 | 350 | 2.1 | 3.6 |



Data sheet no. 10121

## HPV 1000 Vdc in-line PV fuse assembly

A single-pole, non-serviceable photovoltaic in-line fuse holder and fuse assembly in an IP67 dust tight, submersible insulating boot for use in photovoltaic wire harnesses.

### Ratings

- Volts
  - 1000 Vdc
  - 1500 Vdc (HPV-D15V-4A only)
- Amps 1-20 A
- IR 33 kA

### Agency information

- UL Listed to 4248-1 and 4248-19, File E 348242, CSA Component Acceptance, Class 6225 30, File # 47235, IP67 submersible, RoHS compliant, CE

### Terminals and conductors

- Crimp connection for single, 75°C/90°C Cu Stranded 12-8 AWG PV wire

### Boot material

- UL 5VA flammability resistant rated elastomer, UV resistant to UL F1 suitable for outdoor use.

### Operating and storage temperature range

- -40°C to +90°C

### Packaging

- Bulk packed in cartons, 180 fuse assemblies per carton. Carton weight 19.3 lbs (8.7543 kg).
- Fuse assemblies poly bagged with PV fuse element, two insulating boots (for lineside and loadside), and one pressure sensitive label to be applied on outside after complete assembly to the wire harness.

| Catalog no. (amps)* | | | |
|---|---|---|---|
| **1000 Vdc** | | | |
| HPV-DV-1A | HPV-DV-3.5A | HPV-DV-8A | HPV-DV-20A |
| HPV-DV-2A | HPV-DV-4A | HPV-DV-10A | |
| HPV-DV-2.5A | HPV-DV-5A | HPV-DV-12A | |
| HPV-DV-3A | HPV-DV-6A | HPV-DV-15A | |
| **1500 Vdc** | | | |
| HPV-D15V-4A | | | |

* For PV-(amp)A10F-CT fuse specifications and derating curves see data sheet no. 10121 at Eaton.com/bussmannseries.

### Recommended tools

- Sta-Kon™ terminal crimping tool, catalog no. ERG4002
- Multi-Contact assembly tool, catalog no, PV-RWZ with PV-KOI+II and PV-KOIII tapered spindles

## PV 1000/1100 Vdc 14x51mm PV fuses

A range of 14x51mm PV fuses specifically designed for protecting and isolating photovoltaic strings. These fuses are capable of interrupting low overcurrents associated with faulted PV systems (reverse current, multi-array fault).

### Ratings

- Volts
  - 1000 Vdc (25 and 32 A)
  - 1100 Vdc (15 and 20 A)
- Amps 15-32 A
- IR 10 kA

### Agency information

- UL Listed, Guide JFGA, File E335324. Photovoltaic to, UL 248-19, IEC 60269-6 gPV, CSA Pending, CCC Pending, RoHS compliant

| | | $I^2t$ ($A^2s$) | | Watts loss | |
|---|---|---|---|---|---|
| **Catalog no.** | **Amps** | **Pre-arcing** | **Total @ rated volts** | **0.8 $I_n$** | **$I_n$** |
| PV-15A14F | 15 | 14 | 265 | 2.1 | 4 |
| PV-20A14F | 20 | 27 | 568 | 2.7 | 5 |
| PV-25A14F | 25 | 65 | 943 | 2.7 | 5.1 |
| PV-32A14F | 32 | 120 | 1740 | 3.3 | 6.2 |

### Features

- Specifically designed to provide fast-acting protection under low fault current conditions associated with PV systems
- High DC voltage rating
- Demonstrated performance in extreme temperature cycling conditions

### Typical applications

- Combiner boxes
- Inverters

### Recommended fuse holder

- CH141B-PV DIN-Rail modular fuse holder, see data sheet no. 720148 for more information.

**Data sheet no.: 2157**

**Data sheet no. 720132**

## NH 1000 Vdc blade and bolt-on PV fuses

A range of 1000 Vdc NH size Photovoltaic (PV) fuses specifically designed for protecting and isolating array combiners/ re-combiners, disconnects and inverters.

RoHS 2011/65/EU

### Ratings

- Volts 1000 Vdc
- Amps 32-400 A
- IR 50 kA

### Agency information

- UL Listed, Guide JFGA, File E335324, Photovoltaic to UL 248-19, IEC 60269-6 gPV, CSA Class 1422-30, File 53787 (32-160 A), UL Listed, IEC gPV, CSA, CCC Pending, RoHS compliant

### Features

- Compact size saves panel space and extends design flexibility
- Bolt-on versions have common hole centers for standardizing busbar designs across 63-400 amp range
- Low power loss for greater efficiency and lower operating temperature
- Global agency standards simplifies design considerations for worldwide markets
- Dual indication feature and optional microswitches make system monitoring easier

### Typical applications

- Recombiner boxes
- Inverters

### Recommended fuse blocks

- SD_ and TD_, see page 6-11

### Optional microswitches†

| Catalog no. | Tab size - mm (inch) | Connection | Volts | Amps |
|---|---|---|---|---|
| 170H0236 | 250/6.3 (1/4) | Quick connect | 250 | 2 |
| 170H0238 | 110/2.8 (0.11) | | | 2 |
| BVL50 | 187/4.8 (3/16) | | | 6 |

† For use with bladed version.

| Catalog no. | NH size | Amps | $I^2t$ ($A^2S$) Pre-arcing | $I^2t$ ($A^2S$) Total @ 1000V | Watts loss 0.8 $I_n$ | Watts loss $I_n$ |
|---|---|---|---|---|---|---|
| **Blade versions** | | | | | | |
| PV-32ANH1 | 1 | 32 | 80 | 720 | 4 | 8 |
| PV-40ANH1 | | 40 | 185 | 1670 | 5 | 9 |
| PV-50ANH1 | | 50 | 400 | 3600 | 6 | 11 |
| PV-63ANH1 | | 63 | 470 | 4300 | 6 | 12 |
| PV-80ANH1 | | 80 | 640 | 5760 | 8 | 15 |
| PV-100ANH1 | | 100 | 1300 | 11,700 | 8 | 16 |
| PV-125ANH1 | | 125 | 2600 | 23,400 | 9 | 17 |
| PV-160ANH1 | | 160 | 5200 | 46,800 | 14 | 27 |
| PV-200ANH1 | | 200 | 10,200 | 82,000 | 13 | 25 |
| PV-250ANH2 | 2 | 250 | 17,000 | 136,000 | 19 | 38 |
| PV-300ANH3 | 3 | 300 | 32,000 | 260,000 | 24 | 40 |
| PV-315ANH3 | | 315 | 32,000 | 260,000 | 26 | 44 |
| PV-350ANH3 | | 350 | 44,500 | 370,000 | 27 | 45 |
| PV-355ANH3 | | 355 | 44,500 | 370,000 | 28 | 46 |
| PV-400ANH3 | | 400 | 67,500 | 550,000 | 30 | 50 |
| **Bolt-on versions** | | | | | | |
| PV-63ANH1-B | 1 | 63 | 470 | 4300 | 6 | 12 |
| PV-80ANH1-B | | 80 | 640 | 5760 | 8 | 15 |
| PV-100ANH1-B | | 100 | 1300 | 11,700 | 8 | 16 |
| PV-125ANH1-B | | 125 | 2600 | 23,400 | 9 | 17 |
| PV-160ANH1-B | | 160 | 5200 | 46,800 | 14 | 27 |
| PV-200ANH1-B | | 200 | 10,200 | 82,000 | 13 | 25 |
| PV-250ANH2-B | 2 | 250 | 17,000 | 136,000 | 19 | 38 |
| PV-315ANH3-B | 3 | 315 | 32,000 | 260,000 | 26 | 44 |
| PV-355ANH3-B | | 355 | 38,000 | 310,000 | 29 | 48 |
| PV-400ANH3-B | | 400 | 61,000 | 490,000 | 32 | 50 |

Blade versions mount in fuse blocks

Bolt-on versions mount directly to busbas and conductor terminals

## PV 1500 Vdc 10x85mm PV fuses

A range of 10x85mm PV fuses specifically designed for protecting and isolating photovoltaic strings. These fuse links are capable of interrupting low overcurrents associated with faulted PV systems (reverse current, multi-array fault).

Mounts in Bussmann series CHPV15L85 DIN-Rail holder. See page 6-10.

### Ratings

- Volts 1500 Vdc
- Amps 2.25-30 A
- IR 30 kA, 1 ms

### Operating class

- gPV

### Agency information

- UL 248-19
- IEC 60269
- RoHS compliant

### Features

- Designed for fast-acting protection under low fault current conditions associated with PV systems
- UL and IEC photovoltaic standards for global product acceptance
- Low watts loss for greater PV system efficiency

### Typical applications

- Combiner boxes, wire harnesses

| | | $I^2t$ ($A^2s$) | | Watts loss (W) | |
|---|---|---|---|---|---|
| **Catalog no.** | **Amps** | **Pre-arcing** | **Total at 1500 Vdc** | **0.8 $I_n$** | **$I_n$** |
| PV-2.25A10F85L | 2.25 | 3 | 10 | 1.4 | 2.4 |
| PV-2.5A10F85L | 2.5 | 4 | 10 | 1.3 | 2.1 |
| PV-3A10F85L | 3 | 7 | 20 | 1.3 | 2.2 |
| PV-3-5A10F85L | 3.5 | 10 | 20 | 1.6 | 2.6 |
| PV-4A10F85L | 4 | 15 | 30 | 1.7 | 2.8 |
| PV-5A10F85L | 5 | 33 | 60 | 1.7 | 2.8 |
| PV-12A10F85L | 12 | 19 | 240 | 2.1 | 3.5 |
| PV-15A10F85L | 15 | 42 | 300 | 2.2 | 3.6 |
| PV-16A10F85L | 16 | 48 | 350 | 2.1 | 3.5 |
| PV-20A10F85L | 20 | 108 | 800 | 2.7 | 4.5 |
| PV-25A10F85L | 25 | 190 | 1400 | 3.4 | 5.6 |
| PV-30A10F85L | 30 | 268 | 1090 | 4.0 | 6.6 |

**Data sheet no. 10658**

## PV15M-4A-CT 1500 Vdc in-line PV fuse with crimp terminals

Bussmann series PV15M-4A-CT is a 1500 Vdc in-line photovoltaic fuse with crimp terminals for use in wire harnesses and other applications where an in-line PV fuse is desirable.

This in-line fuse can be electrically insulated with customer-supplied overmolding or approved heat-shrink.

### Ratings

- Volts 1500 Vdc
- Amps 4 A
- IR 15 kA DC
- Time constant 3 ms max.

### Agency information

- UL Recognized, 248-19, File E484317 Vol. 1 Sec. 1, CSA pending, RoHS compliant

### Catalog number

- PV15M-4A-CT

### Conductor

- Single PV stranded 75/90°C Cu

### Operating temperature range

-40°C to 90°C

### Materials

- Copper terminals with ceramic fuse body

### Features

- Crimp terminals eliminate the need for a fuse holder or block
- 1500 Vdc rating is ideally suited for today's efficient, higher-voltage PV systems

### Recommended tools

Sta-Kon® terminal crimping tool, catalog no. ERG4002

**Data sheet no. 10639**

## XL 1000 Vdc and 1500 Vdc PV fuses

A range of XL size PV fuses specifically designed for protecting and isolating photovoltaic array combiners and disconnects. These fuses are capable of interrupting low overcurrents associated with faulted PV systems (reverse current, multi-array fault). Optional microswitches available for use in monitoring systems.

### Ratings

- Volts
  - 1000 Vdc (63-600 A)
  - 1500 Vdc (50-500 A)
- Amps (see table)
- IR (see table)

### Agency information

- UL 248-19, Guide JFGA, File E335324, IEC 60269-6 gPV, CSA Class 1422-30, File 53787, RoHS Compliant

### Features

- High DC voltage rating with fast-acting protection under low fault current conditions for PV systems
- Blade or bolt-on mounting for application flexibility
- Demonstrated performance in extreme temperature cycling conditions

### Typical applications

- Recombiner boxes, Inverters

### Recommended fuse blocks

- SB_ blocks, see page 6-10

### Optional microswitches

- Blade: 170H0235 or 170H0237 for size 01XL, 70H0236 or 170H0238 for sizes 1XL, 2XL and 3L
- Bolt-on: 170H0069 for all sizes

| XL size | Catalog no. Bladed version | Catalog no. Bolt-on version | Amps | IR (kA) | $I^2t$ ($A^2s$) Pre-arcing | $I^2t$ ($A^2s$) Total @ rated volts | Watts loss $0.8I_n$ | Watts loss $I_n$ |
|---|---|---|---|---|---|---|---|---|
| **1000 Vdc** | | | | | | | | |
| 01 | PV-63A-01XL | PV-63A-01XL-B | 63 | 50 | 260 | 1900 | 13 | 24 |
| | PV-80A-01XL | PV-80A-01XL-B | 80 | 50 | 490 | 3600 | 17 | 29 |
| | PV-100A-01XL | PV-100A-01XL-B | 100 | 50 | 870 | 6300 | 18 | 32 |
| | PV-125A-01XL | PV-125A-01XL-B | 125 | 50 | 1930 | 13,900 | 20 | 40 |
| | PV-160A-01XL | PV-160A-01XL-B | 160 | 50 | 3900 | 28,100 | 22 | 44 |
| 1 | PV-200A-1XL | PV-200A-1XL-B | 200 | 33 | 9400 | 27,260 | 31 | 60 |
| 2 | PV-160A-2XL | PV-160A-2XL-B | 160 | 33 | 2780 | 21,000 | 25 | 44 |
| | PV-200A-2XL | PV-200A-2XL-B | 200 | 33 | 4950 | 37,000 | 28 | 50 |
| | PV-250A-2XL | PV-250A-2XL-B | 250 | 33 | 9450 | 70,000 | 34 | 60 |
| | PV-315A-2XL | PV-315A-2XL-B | 315 | 33 | 16,600 | 123,000 | 40 | 66 |
| | PV-355A-2XL | PV-355A-2XL-B | 355 | 33 | 26,000 | 192,000 | 42 | 68 |
| | — | PV-160A-2XL-3B* | 160 | 33 | 2780 | 21,000 | 25 | 44 |
| | — | PV-200A-2XL-3B* | 200 | 33 | 4950 | 37,000 | 28 | 50 |
| | — | PV-250A-2XL-3B* | 250 | 33 | 9450 | 70,000 | 34 | 60 |
| | — | PV-315A-2XL-3B* | 315 | 33 | 16,600 | 123,000 | 40 | 66 |
| | — | PV-355A-2XL-3B* | 355 | 33 | 26,000 | 192,000 | 42 | 68 |
| 3 | PV-350A-3L | PV-350A-3L-B | 350 | 50 | 31,000 | 161,200 | 40 | 65 |
| | PV-400A-3L | PV-400A-3L-B | 400 | 50 | 44,500 | 231,400 | 48 | 82 |
| | PV-500A-3L | PV-500A-3L-B | 500 | 50 | 85,000 | 442,000 | 50 | 85 |
| | PV-600A-3L | PV-600A-3L-B | 600 | 50 | 137,000 | 712,400 | 80 | 108 |
| **1500 Vdc** | | | | | | | | |
| 01 | PV-50A-01XL-15 | PV-50A-01XL-B-15 | 50 | 30 | 175 | 1000 | 14 | 25 |
| | PV-63A-01XL-15 | PV-63A-01XL-B-15 | 63 | 30 | 362 | 2250 | 15 | 26 |
| | PV-80A-01XL-15 | PV-80A-01XL-B-15 | 80 | 30 | 565 | 3300 | 19 | 35 |
| | PV-100A-01XL-15 | PV-100A-01XL-B-15 | 100 | 30 | 1100 | 6600 | 22 | 40 |
| | PV-125A-01XL-15 | PV-125A-01XL-B-15 | 125 | 30 | 2200 | 10500 | 23 | 42 |
| | PV-160A-01XL-12 | PV-160A-01XL-B-12 | 160 | 30 | 5000 | 24000 | 26 | 52 |
| 1 | PV-100A-1XL-15 | PV-100A-1XL-B-15 | 100 | 30 | 1250 | 6000 | 24 | 43 |
| | PV-125A-1XL-15 | PV-125A-1XL-B-15 | 125 | 30 | 1950 | 9360 | 25 | 52 |
| | PV-160A-1XL-15 | PV-160A-1XL-B-15 | 160 | 30 | 4200 | 20,160 | 30 | 58 |
| | PV-200A-1XL-15 | PV-200A-1XL-B-15 | 200 | 30 | 9400 | 45,120 | 31 | 61 |
| 2 | PV-125A-2XL-15 | PV-125A-2XL-B-15 | 125 | 30 | 2200 | 15,000 | 25 | 44 |
| | PV-160A-2XL-15 | PV-160A-2XL-B-15 | 160 | 30 | 5000 | 32,000 | 29 | 48 |
| | PV-200A-2XL-15 | PV-200A-2XL-B-15 | 200 | 30 | 8800 | 51,000 | 32 | 57 |
| | PV-250A-2XL-15 | PV-250A-2XL-B-15 | 250 | 30 | 16,600 | 85,000 | 40 | 70 |
| | — | PV-125A-2XL-3B-15* | 125 | 30 | 2200 | 15,000 | 25 | 44 |
| | — | PV-160A-2XL-3B-15* | 160 | 30 | 5000 | 32,000 | 29 | 48 |
| | — | PV-200A-2XL-3B-15* | 200 | 30 | 8800 | 51,000 | 32 | 57 |
| | — | PV-250A-2XL-3B-15* | 250 | 30 | 16,600 | 85,000 | 40 | 70 |
| 3 | PV-250A-3L-15 | PV-250A-3L-B-15 | 250 | 100 | 74,000 | 263,000 | 28 | 49 |
| | PV-315A-3L-15 | PV-315A-3L-B-15 | 315 | 100 | 150,000 | 533,000 | 30 | 52 |
| | PV-350A-3L-15 | PV-350A-3L-B-15 | 350 | 100 | 195,000 | 693,000 | 34 | 59 |
| | PV-355A-3L-15 | PV-355A-3L-B-15 | 355 | 100 | 195,000 | 693,000 | 34 | 59 |
| | PV-400A-3L-15 | PV-400A-3L-B-15 | 400 | 100 | 296,000 | 1,060,000 | 35 | 61 |
| | PV-450A-3L-15 | PV-450A-3L-B-15 | 450 | 100 | 412,000 | 1,470,000 | 39 | 67 |
| | PV-500A-3L-15 | PV-500A-3L-B-15 | 500 | 100 | 532,000 | 1,890,000 | 42 | 73 |

* These fuses have revised bolting patterns that are identical to size 3L bolting pattern to allow using both size 2XL and size 3L fuses without changing the dimensional layout of the inverter, combiners and disconnects.

**Data sheet no. 10201**

## CHPV Modular, IP20 finger-safe DIN-Rail holders for 10x38mm fuses

Bussmann series CHPV DIN-Rail fuse holders are for 10x38mm IEC and UL photovoltaic fuses rated up to 1000 Vdc. They are available with and without indication in 1- and 2-pole IP20 finger-safe versions. A variety of accessories extends their application flexibility and they may be ganged together to meet specific application requirements.

RoHS 2011/65/EU

### Ratings

- Volts 1000 Vdc (or less)
- Amps 30 A
- SCCR 33 kA DC

### Agency information

- UL Listed to 4248-19, Guide IZMR, File E348242
- CSA, Class 6225-30, File 47235
- IEC 60269-2
- CCC
- RoHS compliant
- CE

### Mounting 35mm DIN-Rail

### Wire range - AWG (mm²)

- 75°C and 90°C* Cu
- 18-4 (0.8-21.1)
- Solid, stranded, fine stranded

* May be used with higher temperature rated conductors with appropriate derating.

### Terminals

- Single or dual conductors
- Comb busbar

### Torque 30 lb-in (3.4 N•m) maximum

### Flammability UL 94V0, self-extinguishing

### Storage and operating temperature

- -4°F (-20°C) to 194°F (90°C) indicating
- -4°F (-20°C) to 248°F (120°C) non-indicating

### Features

- Enhanced safety with IP20 finger-safe construction
- Wiring flexibility with terminals rated for use with 75°C or 90°C solid, stranded and fine stranded wire, and spade terminals and comb busbars. (Use any higher temperature insulations at the 90°C ampacity with appropriate derating.)
- Complete range of UL Listed and high SCCR rated one- and three-phase finger-safe comb busbars and power feed lugs

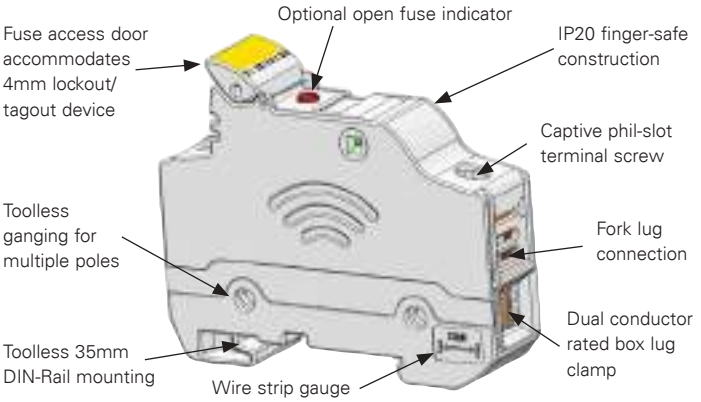


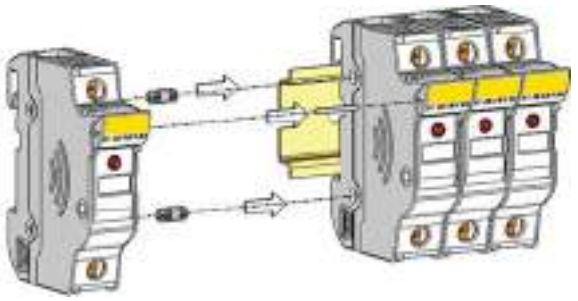

Gang multiple poles to meet application requirements using kit catalog number **JV-L** (gangs up to four poles).

| Catalog no. With indication* | Catalog no. Without indication | Volts / amps | Agency marks | Poles | SCCR | Recommended Bussmann series fuses |
|---|---|---|---|---|---|---|
| CHPV1IU | CHPV1U | 1000 Vdc/30 A | UL, CSA, , UL 4248-18, IEC 60269-1, CCC | 1 | 33 kA DC | PV-(amp)A10F, PV10M-(amp) |
| CHPV2IU | CHPV2U | | | 2 | | |

* All models require 90 V minimum for illumination.

**Data sheet no. 10430**

## BPVM modular blocks for 10x38mm fuses

The Bussmann series BPVM modular style 1000 Vdc fuse blocks for use with 10x38mm (13/32" x 1-1/2") photovoltaic fuses up to 30 amps contain multiple features to add versatility, reduce labor and enhance safety of any panel design. Optional IP20 finger-safe covers enhance safety with a lockout/tagout feature along with optional open fuse indication to speed troubleshooting.

RoHS 2011/65/EU

BPVM-2C with CVRI-CCM covers and TM26CB marker labels

### Ratings

- Volts 1000 Vdc
- Amps 30 A
- SCCR 33 kA

### Agency information

- Blocks
  - UL Listed, Guide IZMR, File E348242
  - CSA Component Acceptance, Class 6225-01, File 47235
  - RoHS compliant
  - CE
- Covers
  - Covers are included in the overall UL Listing and CSA Acceptance
  - IP20 finger-safe
  - RoHS Compliant

### Poles

- 1-, 2-pole units factory assembled
- Single-pole units snap together to create desired number of poles

### Flammability ratings

- Blocks — UL 94V0, self-extinguishing
- Covers — UL 94HB, self-extinguishing

### Operating and storage temperature range

- Blocks -40°C to +120°C
- Non-Indicating covers -40°C to +120°C
- Indicating covers -20°C to +90°C*

* Indication requires minimum 90 Vac/dc and closed circuit to illuminate.

### Marker labels

- Use Bussmann catalog number TM26CB

### Recommended Bussmann series fuses

- 10x38mm PV fuses
- Fast-acting 600 Vdc PVM fuses
- Class gPV 1000 Vdc PV fuses

### Recommended DIN-Rail end stops

- Catalog no. BRKT-ND or BRKT-NDSCRW2

### Features

- Available in 1- and 2-pole configurations to meet stocking requirements
- Blocks are fully modular with a snap-together design that provides tool-less assembly of multiple pole blocks at point-of-use to reduce inventory and save assembly time and labor
- DIN-Rail and panel mount versatility allows one product to be used for multiple applications, lowering inventory cost
- Compact footprint consumes minimal panel space
- Optional see-through cover enhances safety with IP20 finger-safe protection, lockout/tagout capability and open circuit indication
- Easy circuit identification with available universal marker labels for fuse block covers
- Tin-plated bimetallic copper fuse clips deliver superior fatigue resistance compared to traditional spring brass
- Listed to UL 4248-18 for photovoltaic application

### Terminal specifications for 75/90°C Cu and Al wire

| Terminal type | AWG range | Torque lb-in (N•m) |
|---|---|---|
| Box lug ("CR" Option) | Cu 2-14, Al 2-8 | Cu 2-3 — 50 (5.6) |
| | | Cu 4-6 — 45 (5.1) |
| | | Cu 8-14 — 35 (4.0) |
| | | Al 2-6 — 50 (5.6) |
| | | Al 8 — 40 (4.5) |
| Screw (S) | Cu 10-18 | 10-18 — 20 (2.3) |

| Catalog no. | | | |
|---|---|---|---|
| Terminal type | | | |
| #10-32 Phil-slot screw | Box lug | Poles | Fuse size/class |
| BPVM-1S | BPVM-1C | 1 | 10x38mm (13/32" x 1-1/2") gPV and PV |
| BPVM-2S | BPVM-2C | 2 | |

### Recommended covers*

| Cover part numbers | |
|---|---|
| Indicating | Non indicating |
| CVRI-CCM | CVR-CCM |

* For use with 4 AWG max conductors.



Data sheet no. 10265

## CHPV15L85 holder for 10x85mm and 14x85mm fuses

CHPV15L85 fuse holder can be used with 10x85mm and 14x85mm cylindrical gPV fuses.

The unique design offers a high degree of safety with no possibility of any accidental contact with live parts during fuse replacement. When the fuse carrier is extracted, it continues to cover the live parts.

RoHS 2011/65/EU

### Ratings

- Volts 1500 Vdc
- Amps 32 A (UL and IEC)
- SCCR 50 kA
- Impulse withstand $U_{imp}$ 12 kV (tested at 18.5 kV)

### Agency information

- cULus 4248-1 Edition 1, File E384242
- cULus 4248-19 Edition 1, File E14853
- IEC 60269-1
- RoHS compliant

### Poles 1

### Fuse rated power dissipation

- Up to 8.5 W max

### Protection level

- IP20

### Storage and operating temperature range

- Minimum permitted ambient temperature: -40°C (installation only at temperatures > -5°C). Service conditions as per IEC 61439-1, maximum pollution degree 3.

### Mounting

- 35mm DIN-Rail

### Terminals

- Box terminal, Cu 4-10mm² flexible, directly clamped or with wire-end ferrules (flexible + wire-end ferrule may not be possible with maximum cross-section)

### To order

- Specify catalog number **CHPV15L85**

### Features

- Global accreditation
- 32 amp current rating for UL and IEC

### Compatible Bussmann series fuses

- PV-xA10F85 10x85mm fuses
- PV-xxA14LF10F 14x85mm fuses

**Data sheet no. 10628**

## SB blocks for XL size PV fuses

SB XL PV fuse blocks are available with integral shields specifically designed to be fitted with Bussmann series XL photovoltaic fuses (see data sheet 10201).

### Ratings

- Volts 1500 Vdc
- Amps
  - 250 A
  - 400 A
  - 630 A

RoHS 2011/65/EU

### Agency information

- IEC 60269-1
- UL Listed, File E348242
- RoHS complaint

### Poles

- 1
- **Power acceptance**
- Sizes 01XL and 1XL: 56 W
- Size 2XL: 70 W
- Size 3L: 96 W

### Protection level

- IP20 with terminal covers and gripping lug cover in place and shielding of any exposed part of the terminal lugs

### Operating temperature range

- -45°C to 80°C (with fuse derating above 40°C)

### Mounting

- Panel

### UL94 Flammability rating

- Block V-2
- Terminal cover V-0

| Catalog no. | Description | XL fuse size | Amps |
|---|---|---|---|
| SB1XL-S | 1-pole PV fuse block | 01XL and 1XL | 250 |
| SB2XL-S | | 2XL | 400 |
| SB3L-S | | 3L | 630 |

### Accessory

| Catalog no. | Description |
|---|---|
| FEH1500 | Fuse extraction handle available for sizes 01XL to 3L |

**Data sheet no. 10066**

## SD and TD blocks for NH size PV fuses

SD PV fuse blocks for NH fuse sizes 1 to 3 NH are available in 1- and 3-pole versions and are specifically designed for use with Bussmann series bladed NH photovoltaic fuses (see data sheet 720133).

### Ratings

- Volts
  - 1500 Vdc (IEC)
- Amps
  - 250 A (SD1)
  - 400 A (SD2)
  - 630 A (SD3)
- SCCR 50 kA

RoHS 2011/65/EU

Shown with optional shroud kit

### Agency information

- IEC 60269-1
- UL Listed, File E348242
- CSA File 47235
- RoHS compliant

### Poles

- 1 and 3

### Power acceptance

- SD1 - 32 W
- SD2 - 45 W
- SD3 - 60 W

### Protection level

- IEC - IP20 with shroud kit installed and shielding of any exposed terminal lugs
- UL - Installation of shroud kit decreases the likelihood of incidental terminal contact. To ensure compliance to IP20 specifications per UL the installer must make additional provisions.

### Operating temperature range

- IEC Standards -20°C to 70°C
- UL -20°C to 90°C Max*

* Dependant upon rating of customer supplied lugs.

### Storage temperature range

- IEC and UL -40°C to 90°C

### Mounting

- 35mm DIN-Rail
- Panel

### Flammability rating

- UL 94V0

| Catalog no. | Poles | Description | NH fuse size | Amps |
|---|---|---|---|---|
| SD1--D-PV | 1 | NH PV fuse block | 1 | 250 |
| TD1--D-PV | 3 | | | |
| SD2-D-PV | 1 | | 2 | 400 |
| TD2-D-PV | 3 | | | |
| SD3-D-PV | 1 | | 3 | 630 |
| TD3-D-PV | 3 | | | |

### Accessories

### Fuse extraction handle

| Catalog no. | Size | Amps |
|---|---|---|
| FEH | NH1 to 3 | 250 to 630 |

### Shroud kits

| Catalog no.* | Fuse block | Fuse size | Amps | Description |
|---|---|---|---|---|
| SD12-SK | SD1 and TD1 | NH1 | 250 | Includes 2 shrouds and 1 fuse cover |
| SD12-SK | SD2 and TD2 | NH2 | 400 | |
| SD3-SK | SD3 and TD3 | NH3 | 630 | |

* Order one kit per pole.

### Phase barrier kits

| Catalog no.† | Fuse block | Fuse size | Amps | Description |
|---|---|---|---|---|
| SD12-PB | SD1 and TD1 | NH1 | 250 | 2 phase barriers and 2 ganging links |
| SD12-PB | SD2 and TD2 | NH2 | 400 | |
| SD3-PB | SD3 and TD3 | NH3 | 630 | |

† Order one kit per pole.

### Microswitches

| Catalog no. | Ratings |
|---|---|
| BVL50 | 6 A 250 Vac |
| 170H0236 | 2 A 250 Vac |
| 170H0238 | 2 A 250 Vac |

### Neutral links

| Catalog no. | Fuse block | Fuse size | Amps |
|---|---|---|---|
| SDL-1 | SD1 and TD1 | NH1 | 250 |
| SDL-2 | SD2 and TD2 | NH2 | 400 |
| SDL-3 | SD3 and TD3 | NH3 | 630 |

BUSSMANN
SERIES

# Bussmann series products at your fingertips

We make searching for and selecting Bussmann™ series products easy with four unique product selector tools:

**Surge Protective Device Selector**
**Low Voltage Fuses Selector**
**Medium Voltage Fuse Selector**
**Connector Selector**

Each tool allows you to select from available attributes to find the product that best meets your needs. Results are then displayed with links to product detail webpages for more information. Quick access to our team of experts for additional assistance is also made available. And with a responsive design, the tools can be used anytime, anywhere.

Find these selector tools and more at **toolbox.bussmann.com**.

EATON
*Powering Business Worldwide*

Follow us on social media to get the latest product and support information.

# A fusible solution for virtually every medium voltage application

## Bussmann series E-Rated, R-Rated and PT medium voltage fuses

## Contents


| Description | Section page |
|---|---|
| **Introduction** | **2** |
| **E-Rated current-limiting** | |
| 2.75 kV | 3-4 |
| 5.5 kV | 5-7 |
| 5.5 kV specialty mount | 8-10 |
| 8.3 kV | 11-12 |
| 8.3 kV specialty mount | 13-14 |
| 15.5 kV | 15-17 |
| 15.5 kV specialty mount | 18-19 |
| DIN E-Rated current-limiting — 5.5-38 kV | 20-21 |
| **R-Rated current-limiting** | |
| 2.4 kV | 22 |
| 4.8 kV | 23-24 |
| 7.2 kV | 25 |
| PT E-Rated current-limiting — 2.475-38 kV | 26-29 |
| PT fast-acting current-limiting | 30 |
| British IEC | 31 |
| DIN IEC | 32 |
| Expulsion fuse links | 33 |
| EEI-NEMA Type K and T – Type H and N | 34 |
| PT fuse mountings | 35 |
| Recommended fuseclips | 36 |

## Introduction

### Worldwide circuit protection solutions

Eaton is the world-leading supplier of Bussmann series medium voltage fuses. Each product is backed by an efficient worldwide distribution network with unrivaled service and technical support. Eaton circuit protection solutions comply with major international standards: ANSI, BS, DIN, IEC and UL.

### Fuse types

Medium voltage fuses generally fit into two categories – expulsion fuses and current limiting. The definitions per ANSI C37.40 are:

**Expulsion fuse**: A vented fuse in which the expulsion effect of the gases produced by internal arcing, either alone or aided by other mechanisms results in current interruption. Expulsion fuses will limit the duration of an overcurrent event, but they will not limit the magnitude of fault current.

**Current-limiting fuse**: A fuse unit that, when in its current-responsive element is melted by a current within the fuse's specified current-limiting range, abruptly introduces a high resistance to reduce current magnitude and duration, resulting in subsequent current interruption. A current limiting fuse will reduce the magnitude a fault current as well as limit the duration of the overcurrent event when operating in its current limiting range. Eaton offers a broad range of current limiting fuses for protection of feeders, transformers and motor circuits designed to ANSI, BS, DIN and IEC standards.

### Medium voltage current-limiting fuses

Current-limiting fuses are classified into three categories:

1. **Full range** – defined by ANSI C37.40 as "a fuse capable of interrupting all currents from the maximum rated interrupting current down to the minimum continuous current that causes the melting of the fusible element(s), when the fuse is applied at the maximum ambient temperature specified by the manufacturer." It is able to interrupt any current that will melt its element.
2. **General purpose** – defined by ANSI C37.40 as "a fuse capable of interrupting all currents from the maximum rated interrupting current down to the current that causes melting of the fusible element(s) in one hour." Not all currents fall within this range. It is possible for the fuse to be exposed to an overcurrent lower than the value given by the one hour criteria. In that case, a different overcurrent protection device would be required to interrupt the overcurrent.
3. **Back-up** – defined by ANSI C37.40 as "a fuse capable of interrupting all currents from the maximum interrupting rating current down to the minimum interrupting current." The minimum interrupting current is the lowest current that the fuse will be able to clear properly. This creates a need to place a low current interrupting device, such as motor overloads, in series with the back-up rated fuse.

### E- and R-Rated fuses

In North America, current limiting fuses typically fall into the category of E-Rated fuses and R-Rated fuses. Eaton also offers a wide range of Bussmann series current limiting fuses designed to BS, DIN and IEC standards.

E-Rated fuses are used to protect feeder circuits, power transformers and potential transformers. E-Rated fuses have defined current response times specified by ANSI C37.46. E-Rated fuses 100 amps and below must melt in 300 seconds at an RMS current within the range of 200 to 240 percent of the continuous current rating. E-Rated fuses above 100 amps must melt in 600 seconds at an RMS current within the range of 240 to 264 percent of the continuous current rating of the fuse. Eaton offers a wide variety of full range and general purpose E-Rated fuses from 2.4 to 38 kV.

R-Rated fuses are back-up fuses that provide short-circuit protection for motor circuits. They are applied with medium voltage motor starters which provide the overload protection for the circuit. R-Rated fuses also have defined current response times specified by ANSI C37.46. R-Rated fuses will melt in a range of 15 to 35 seconds at a current equal to 100 times the "R" rating. Bussmann series R-Rated fuses for motor circuit protection are available in voltage ratings from 2.4 to 8.3 kV

## 2.75 kV E-Rated medium voltage ferrule fuses

### Catalog symbols

- 2CLE-_E
- JCX-_E

### Ratings

- Volts 2.75 kV
- Amps 10 to 450 A
- Interrupting ratings
  - 50 kA RMS Sym. (2CLE-_E)
  - 40 kA RMS Sym. (JCX-_E)

### Agency information

- E-Rated fuses meet the performance characteristics of ANSI C37.46

### Dimensions — in (mm)

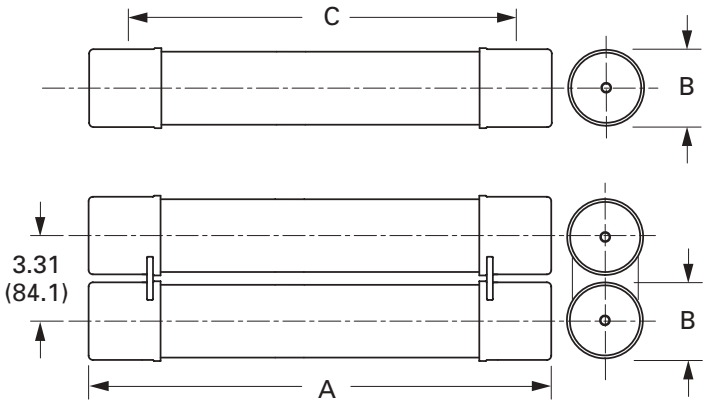


### Recommended CLE fuse holders

| Amps | Fuse mounting type | BIL (kV) | Approx. dimensions — in (mm) Diameter A | Clip center B | Length C | Catalog no. Mounting* Porcelain insulator | Glass-polyester insulator | Live parts (with end fittings) | End fittings (disconnect only) |
|---|---|---|---|---|---|---|---|---|---|
| **CLE** | | | | | | | | | |
| 15E–25E Single barrel | Non-disconnect | 60 | 2 (51) | 8.1 (206) | 9.5 (241) | 2CLE-PNM-C | 2CLE-GNM-C | CLE-NL-C | — |
| | Disconnect† | | | | | 2CLE-PDM-C | 2CLE-GDM-C | CLE-DL-C | CLE-DF-C |
| 10E–225E Single barrel | Non-disconnect | | 3 (76) | 7 (178) | 10.9 (277) | 2CLE-PNM-D | 2CLE-GNM-D | CLE-NL-D | — |
| | Disconnect† | | | | | 2CLE-PDM-D | 2CLE-GDM-D | CLE-DL-D | CLE-DF-D |
| 250E–300E 350X-450X Double barrel | Non-disconnect | | | | | 2CLE-PNM-E | 2CLE-GNM-E | CLE-NL-E | — |
| | Disconnect† | | | | | 2CLE-PDM-E | 2CLE-GDM-E | CLE-DL-E | CLE-DF-E |

* Includes live parts and end fittings, end fittings supplied only when required.
† Disconnect mountings provide a means for fuse extraction only. Do not use a disconnect mounting for load switching or fuse removal while energized.

### Recommended fuseclips

| Description | Fuse dia. — in (mm) | Catalog no. |
|---|---|---|
| Enclosed fuseclip | 2 (51) | A3354710* |
| | 3 (76) | A3354730* |
| Open fuseclip | | 1A0065 |
| Spring loaded open fuseclip | | 9078A67G04 |

* For single barrel applications only. Not sold in pairs.

## CLE and JCX

| Amps | Dimensions — in (mm) Length A | Diameter B | Clip centers C | IR RMS Sym. (kA) | No. of barrels | Installation location | Catalog no. |
|---|---|---|---|---|---|---|---|
| 1 | 9.2 (234) | 2 (51) | 7 (178) | 40 | | Indoor/outdoor | JCX-1E |
| 2 | | | | | | | JCX-2E |
| 3 | | | | | | | JCX-3E |
| 5 | | | | | | | JCX-5E |
| 7 | | | | | | | JCX-7E |
| 10 | | | | | | | JCX-10E |
| 10 | 10.9 (277) | 3 (76) | | 50 | 1 | Indoor | 2CLE-10E |
| 15 | 9.5 (241) | 2 (51) | 8.1 (206) | | | | 2CLE-15E |
| 20 | | | | | | | 2CLE-20E |
| 25 | | | | | | | 2CLE-25E |
| 30 | 10.9 (277) | 3 (76) | 7 (178) | | | | 2CLE-30E |
| 40 | | | | | | | 2CLE-40E |
| 50 | | | | | | | 2CLE-50E |
| 65 | | | | | | | 2CLE-65E |
| 80 | | | | | | | 2CLE-80E |
| 100 | | | | | | | 2CLE-100E |
| 125 | | | | | | | 2CLE-125E |
| 150 | | | | | | | 2CLE-150E |
| 200 | | | | | | | 2CLE-200E |
| 225 | | | | | | | 2CLE-225E |
| 250* | | | | | 2 | | 2CLE-250E |
| 300* | | | | | | | 2CLE-300E |
| 350** | | | | | | | 2CLE-350X |
| 400** | | | | | | | 2CLE-400X |
| 450** | | | | | | | 2CLE-450X |

* 250 and 300 amp ratings may also be applied at 280 and 325 amps respectively, but fuses will no longer be complaint with ANSI E rating criteria.
**Does not comply with ANSI C37.46 for "E" rating.

**Data sheet no. 10350**

## 5.5 kV E-Rated medium voltage ferrule fuses

### Catalog symbols

- General purpose
  - 5CLE-_E-D (10-25 A)
  - 5CLE-_E (10-1350 A)
  - 5HLE-_E (10-450 A)
  - JCY-_E (1-25 A)
- Full range (per ANSI C37.40)
  - MV055F_ (10-450 A)

### Ratings*

- Volts 5.5 kV
- Amps 1 to 1350 A
- Interrupting ratings 40 to 63 kA RMS Sym.

* See catalog number tables for voltages, ampacities and interrupting ratings by catalog number.

### Agency information

- E-Rated fuses meet the performance characteristics of ANSI C37.46
- UL Listed, Guide JEEG, File E240398. See catalog numbers.

### Dimensions — in (mm)

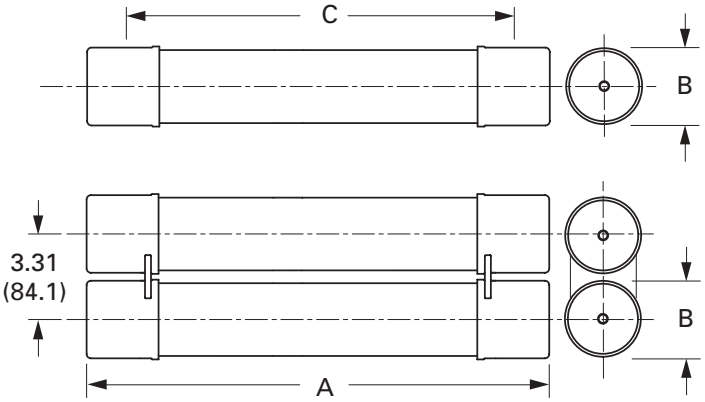


### Recommended fuseclips

| Description | Fuse dia. — in (mm) | Catalog no. |
|---|---|---|
| Enclosed fuseclip | 2 (51) | A3354710* |
| | 3 (76) | A3354730* |
| Open fuseclip | | 1A0065 |
| Spring loaded open fuseclip | | 9078A67G04 |

* For single barrel applications only. Not sold in pairs.

### Recommended CLE and HLE holders

| Amps | Fuse mounting type | BIL (kV) | Approx. Dimensions — in (mm) Diameter A | Clip center B | Length C | Catalog no. Mounting* Porcelain insulator | Glass-polyester insulator | Live parts (with end fittings) | End fittings (disconnect only) |
|---|---|---|---|---|---|---|---|---|---|
| **CLE** | | | | | | | | | |
| 10E-D–25E-D 30E–250E Single barrel | Non-disconnect | 60 | 3.0 (76.2) | 14.0 (355.6) | 17.9 (454.7) | 5CLE-PNM-D | 5CLE-GNM-D | CLE-NL-D | — |
| | Disconnect† | | | | | 5CLE-PDM-D | 5CLE-GDM-D | CLE-DL-D | CLE-DF-D |
| 15E–25E Single barrel | Non-disconnect | | 2.0 (50.8) | 11.5 (292.1) | 12.9 (327.7) | 5CLE-PNM-C | 5CLE-GNM-C | CLE-NL-C | — |
| | Disconnect† | | | | | 5CLE-PDM-C | 5CLE-GDM-C | CLE-DL-C | CLE-DF-C |
| 300E–450E Double barrel | Non-disconnect | | 3.0 (76.2) | 14.0 (355.6) | 17.9 (454.7) | 5CLE-PNM-E | 5CLE-GNM-E | CLE-NL-E | — |
| | Disconnect† | | | | | 5CLE-PDM-E | 5CLE-GDM-E | CLE-DL-E | CLE-DF-E |
| 600E and 750E Double barrel | Consult factory | | 4.0 (101.6) | N/A | N/A | — | — | — | — |
| 1100E and 1350E Four barrel | Consult factory | — | | | | | | | |
| **HLE** | | | | | | | | | |
| 10E-D–250E Single barrel | Non-disconnect | 60 | 3.0 (76.2) | 12.0 (304.8) | 15.9 (403.9) | 5HLE-PNM-D | 5HLE-GNM-D | CLE-NL-D | — |
| | Disconnect | | | | | 5HLE-PDM-D | 5HLE-GDM-D | CLE-DL-D | CLE-DF-D |
| 300E–450E Double barrel | Non-disconnect | | | | | 5HLE-PNM-E | 5HLE-GNM-E | CLE-NL-E | — |
| | Disconnect | | | | | 5HLE-PDM-E | 5HLE-GDM-E | CLE-DL-E | CLE-DF-E |

* Including live parts and end fittings, end fittings supplied only when required.
† Disconnect mountings provide a means for fuse extraction only. Do not use a disconnect mounting for load switching or fuse removal while energized.

## CLE, HLE and JCY general purpose

| Amps | Dimensions — in (mm) Length A | Diameter B | Clip centers C | IR RMS Sym. (kA) | No. of barrels | Installation location | Catalog no. |
|---|---|---|---|---|---|---|---|
| 1 | 11.2 (284) | 2 (51) | 9 (229) | 40 | 1 | Indoor/outdoor | JCY-1E |
| 2 | | | | | | | JCY-2E |
| 3 | | | | | | | JCY-3E |
| 5 | | | | | | | JCY-5E |
| 7 | | | | | | | JCY-7E |
| 10 | | | | | | | JCY-10E |
| 10 | 17.9 (455) | 3 (76) | 14 (356) | 63 | | | 5CLE-10E-D |
| 10 | 15.9 (404) | | 12 (305) | | | | 5HLE-10E |
| 15 | 11.2 (284) | 2 (51) | 9 (229) | 40 | | | JCY-15E |
| 15 | 12.9 (328) | | 11.5 (292) | 50 | | Indoor | 5CLE-15E* |
| 15 | 17.9 (455) | 3 (76) | 14 (356) | 63 | | Indoor/outdoor | 5CLE-15E-D |
| 15 | 15.9 (404) | | 12 (305) | | | | 5HLE-15E |
| 20 | 11.2 (284) | 2 (51) | 9 (229) | 40 | | | JCY-20E |
| 20 | 12.9 (328) | | 11.5 (292) | 50 | | Indoor | 5CLE-20E* |
| 20 | 17.9 (455) | 3 (76) | 14 (356) | 63 | | Indoor/outdoor | 5CLE-20E-D |
| 20 | 15.9 (404) | | 12 (305) | | | | 5HLE-20E |
| 25 | 11.2 (284) | 2 (51) | 9 (229) | 40 | | | JCY-25E |
| 25 | 12.9 (328) | 2 (51) | 11.5 (292) | 50 | | Indoor | 5CLE-25E* |
| 25 | 17.9 (455) | 3 (76) | 14 (356) | 63 | | Indoor/outdoor | 5CLE-25E-D |
| 25 | 15.9 (404) | | 12 (305) | | | | 5HLE-25E |
| 30 | 17.9 (455) | | 14 (356) | | | | 5CLE-30E |
| 30 | 15.9 (404) | | 12 (305) | | | | 5HLE-30E |
| 40 | 17.9 (455) | | 14 (356) | 65 | | | 5CLE-40E† |
| 40 | 15.9 (404) | | 12 (305) | | | | 5HLE-40E† |
| 50 | 17.9 (455) | | 14 (356) | | | | 5CLE-50E† |
| 50 | 15.9 (404) | | 12 (305) | | | | 5HLE-50E† |
| 65 | 17.9 (455) | | 14 (356) | | | | 5CLE-65E† |
| 65 | 15.9 (404) | | 12 (305) | | | | 5HLE-65E† |
| 80 | 17.9 (455) | | 14 (356) | | | | 5CLE-80E† |
| 80 | 15.9 (404) | | 12 (305) | | | | 5HLE-80E† |
| 100 | 17.9 (455) | | 14 (356) | | | | 5CLE-100E† |
| 100 | 15.9 (404) | | 12 (305) | | | | 5HLE-100E† |
| 125 | 17.9 (455) | | 14 (356) | | | | 5CLE-125E† |
| 125 | 15.9 (404) | | 12 (305) | | | | 5HLE-125E† |
| 150 | 17.9 (455) | | 14 (356) | | | | 5CLE-150E† |
| 150 | 15.9 (404) | | 12 (305) | | | | 5HLE-150E† |
| 175 | 17.9 (455) | | 14 (356) | | | | 5CLE-175E† |
| 175 | 15.9 (404) | | 12 (305) | | | | 5HLE-175E† |
| 200 | 17.9 (455) | | 14 (356) | | | | 5CLE-200E† |
| 200 | 15.9 (404) | | 12 (305) | | | | 5HLE-200E† |
| 250 | 17.9 (455) | | 14 (356) | | | | 5CLE-250E† |
| 250 | 15.9 (404) | | 12 (305) | | | | 5HLE-250E† |
| 300 | 17.9 (455) | | 14 (356) | | 2 | | 5CLE-300E† |
| 300 | 15.9 (404) | | 12 (305) | | | | 5HLE-300E† |
| 350 | 17.9 (455) | | 14 (356) | | | | 5CLE-350E† |
| 350 | 15.9 (404) | | 12 (305) | | | | 5HLE-350E† |
| 400 | 17.9 (455) | | 14 (356) | | | | 5CLE-400E† |
| 400 | 15.9 (404) | | 12 (305) | | | | 5HLE-400E† |
| 450 | 17.9 (455) | | 14 (356) | | | | 5CLE-450E† |
| 450 | 15.9 (404) | | 12 (305) | | | | 5HLE-450E† |

* Fuses conform to dimensional standards established by Westinghouse.
† UL Listed, Guide JEEG, File E240398.

**Data sheet no. 10351**

## MV055 full range

| Amps | Dimensions — in (mm) Length A | Diameter B | Clip centers C | IR RMS Sym. (kA) | No. of Barrels | Installation location | Catalog no. |
|---|---|---|---|---|---|---|---|
| 5 | | | | | | | MV055F1CAX5E |
| 7 | | 2 (51) | | | | | MV055F1CAX7E |
| 10 | | | | | | | MV055F1CAX10E |
| 10 | | 3 (76) | | | | | MV055F1DAX10E |
| 15 | | 2 (51) | | | | | MV055F1CAX15E |
| 15 | | 3 (76) | | | | | MV055F1DAX15E |
| 20 | | 2 (51) | | | | | MV055F1CAX20E |
| 20 | | 3 (76) | | | | | MV055F1DAX20E |
| 25 | | 2 (51) | | | | | MV055F1CAX25E |
| 25 | | 3 (76) | | | | | MV055F1DAX25E |
| 30 | | 2 (51) | | | | | MV055F1CAX30E |
| 30 | | 3 (76) | | | 1 | | MV055F1DAX30E |
| 40 | | 2 (51) | | | | | MV055F1CAX40E |
| 40 | | 3 (76) | | | | | MV055F1DAX40E |
| 50 | 15.7 (399) | 2 (51) | 12 (305) | 50 | | Indoor | MV055F1CAX50E |
| 50 | | 3 (76) | | | | | MV055F1DAX50E |
| 65 | | 2 (51) | | | | | MV055F1CAX65E |
| 65 | | | | | | | MV055F1DAX65E |
| 80 | | | | | | | MV055F1DAX80E |
| 100 | | | | | | | MV055F1DAX100E |
| 125 | | | | | | | MV055F1DAX125E |
| 150 | | | | | | | MV055F1DAX150E |
| 175 | | 3 (76) | | | | | MV055F1DAX175E |
| 200 | | | | | | | MV055F1DAX200E |
| 250 | | | | | | | MV055F2DAX250E |
| 300 | | | | | | | MV055F2DAX300E |
| 350 | | | | | 2 | | MV055F2DAX350E |
| 400 | | | | | | | MV055F2DAX400E |
| 450 | | | | | | | MV055F2DAX450E |

## Recommended MV055 fuseclips

| Description | Fuse dia. — in (mm) | Catalog no. |
|---|---|---|
| Enclosed fuseclip | 2 (51) | A3354710* |
| | 3 (76) | A3354730* |
| Open fuseclip | | 1A0065 |
| Spring loaded open fuseclip | | 9078A67G04 |

* For single barrel applications only. Not sold in pairs.

## 5.5 kV E-Rated medium voltage specialty mount fuses

### Catalog symbols

- 5AHLE-_E (for Eaton AMPGARD motor starting assemblies)
- 5BHLE-_E / 5BHCL-_E (bolt-on version)
- 5CLE-_E
- 5HCL-_E (clip-lock version)

### Ratings*

- Volts 5.5 kV
- Amps 10 to 900 A
- Interrupting ratings 31 to 63 kA RMS Sym.

* See catalog number tables for voltages, ampacities and interrupting ratings by catalog number.

### Agency information

- E-Rated fuses meet the performance characteristics of ANSI C37.46

### Recommended live parts for clip-lock fuses

- Catalog number HCL-NL-1

### Dimensions — in (mm)

### BHLE bolt-on

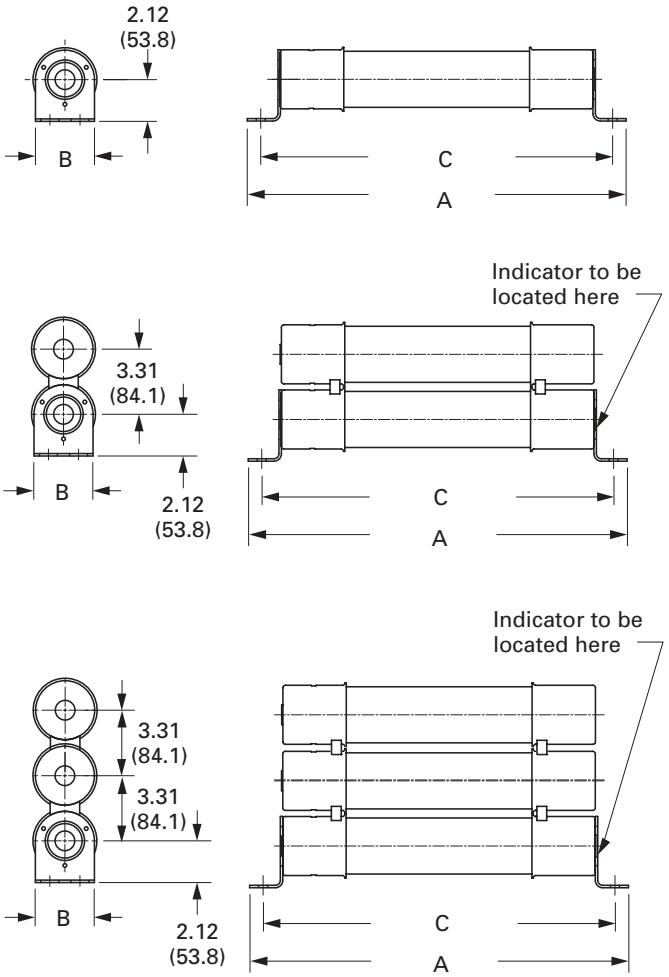


### HCL clip-lock

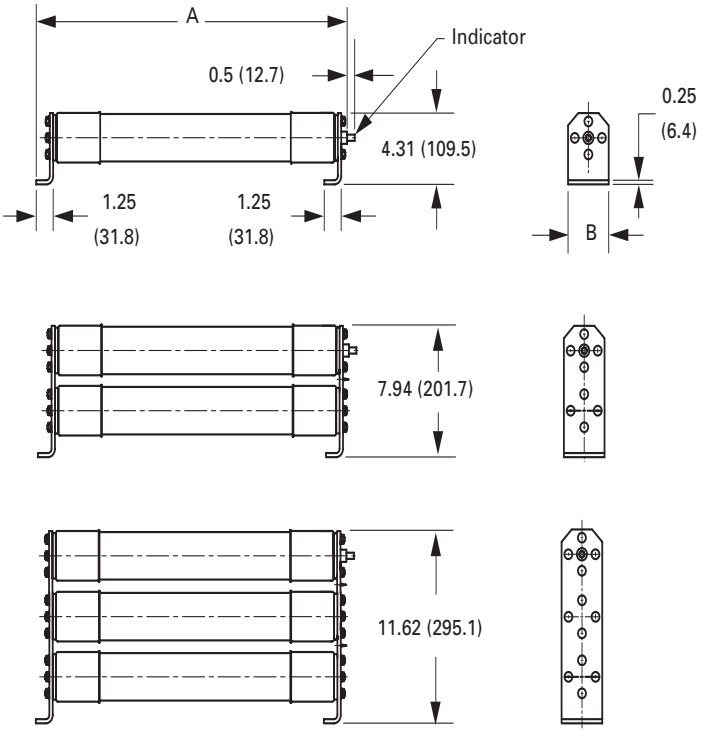


### CLE four-barrel bolt-on

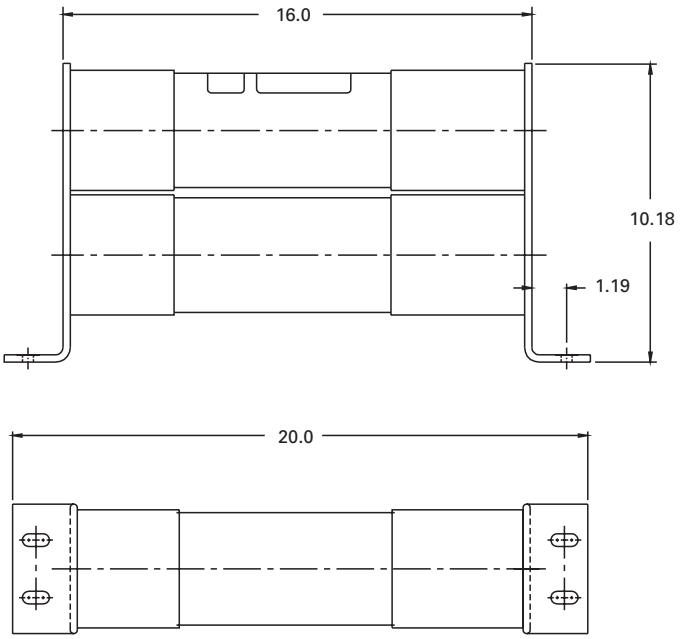


**Note:** 1100E and 1350E fuses require two double barrel fuses (4 total barrels) customer to parallel.

**Data sheet no. 10351**

## AHLE for Eaton AMPGARD motor starting assemblies

| Amps | IR RMS Sym. (kA) | No. of barrels | Catalog no. |
|---|---|---|---|
| 10 | 65 | 1 | 5AHLE-10E |
| 15 | | | 5AHLE-15E |
| 20 | | | 5AHLE-20E |
| 25 | | | 5AHLE-25E |
| 30 | | | 5AHLE-30E |
| 40 | | | 5AHLE-40E† |
| 50 | | | 5AHLE-50E† |
| 65 | | | 5AHLE-65E† |
| 80 | | | 5AHLE-80E† |
| 100 | | | 5AHLE-100E† |
| 125 | | | 5AHLE-125E† |
| 150 | | | 5AHLE-150E† |
| 175 | | | 5AHLE-175E† |
| 200 | | | 5AHLE-200E† |
| 250 | | | 5AHLE-250E† |
| 300 | | 2 | 5AHLE-300E† |
| 350 | | | 5AHLE-350E† |
| 400 | | | 5AHLE-400E† |
| 450 | | | 5AHLE-450E† |

† UL Listed, Guide JEEG, File E240398.

## HCL clip-lock versions

| Amps | Dimensions — in (mm) | | | IR RMS Sym. (kA) | No. of barrels | Installation location | Catalog no. |
|---|---|---|---|---|---|---|---|
| | Length A | Diameter B | Hole centers C | | | | |
| 10 | 16.8 (427) | 3 (76) | N/A | 65 | 1 | Indoor | 5HCL-10E |
| 15 | | | | | | | 5HCL-15E |
| 20 | | | | | | | 5HCL-20E |
| 25 | | | | | | | 5HCL-25E |
| 30 | | | | | | | 5HCL-30E |
| 40 | | | | | | | 5HCL-40E† |
| 50 | | | | | | | 5HCL-50E† |
| 65 | | | | | | | 5HCL-65E† |
| 80 | | | | | | | 5HCL-80E† |
| 100 | | | | | | | 5HCL-100E† |
| 125 | | | | | | | 5HCL-125E† |
| 150 | | | | | | | 5HCL-150E† |
| 200 | 22.8 (579) | | | | 2 | | 5HCL-200E† |
| 250 | | | | | | | 5HCL-250E† |
| 300 | | | | | | | 5HCL-300E† |
| 400 | | | | | | | 5HCL-400E† |
| 450 | | | | | | | 5HCL-450E† |
| 500 | | | | | | | 5HCL-500E |
| 600 | | | | | | | 5HCL-600E |

† UL Listed, Guide JEEG, File E240398.

## CLE, BHLE and BHCL bolt-on versions

| Amps | Dimensions — in (mm) Length A | Diameter B | Hole centers C | IR RMS Sym. (kA) | No. of barrels | Installation location | Catalog no. |
|---|---|---|---|---|---|---|---|
| 10 | 19.2 (488) | 3 (76) | 17.9 (455) | 65 | 1 | Indoor | 5BHLE-10E |
| 15 | | | | | | | 5BHLE-15E |
| 20 | | | | | | | 5BHLE-20E |
| 25 | | | | | | | 5BHLE-25E |
| 30 | | | | | | | 5BHLE-30E |
| 40 | | | | | | | 5BHLE-40E† |
| 50 | | | | | | | 5BHLE-50E† |
| 65 | | | | | | | 5BHLE-65E† |
| 80 | | | | | | | 5BHLE-80E† |
| 100 | | | | | | | 5BHLE-100E† |
| 125 | | | | | | | 5BHLE-125E† |
| 150 | | | | | | | 5BHLE-150E† |
| 175 | | | | | | | 5BHLE-175E† |
| 200 | | | | | | | 5BHLE-200E† |
| 200 | 25.1 (637) | | 23.7 (602) | | | | 5BHCL-200E |
| 250 | 19.2 (488) | | 17.9 (455) | | | | 5BHLE-250E† |
| 250 | 25.1 (637) | | 23.7 (602) | | | | 5BHCL-250E |
| 300 | 19.2 (488) | | 17.9 (455) | | 2 | | 5BHLE-300E† |
| 300 | 25.1 (637) | | 23.7 (602) | | | | 5BHCL-300E |
| 350 | 19.2 (488) | | 17.9 (455) | | | | 5BHLE-350E† |
| 400 | | | | | | | 5BHLE-400E† |
| 400 | 25.1 (637) | | 23.7 (602) | | | | 5BHCL-400E |
| 450 | 19.2 (488) | | 17.9 (455) | | | | 5BHLE-450E† |
| 450 | 25.1 (637) | | 23.7 (602) | | | | 5BHCL-450E |
| 500 | | | | | | | 5BHCL-500E |
| 600 | | | | | | | 5BHCL-600E |
| 600 | 28.9 (734) | 4 (102) | 18.4 (467) | 40 | | | 5CLE-600E |
| 750 | 25.1 (637) | 3 (76) | 23.7 (602) | 63 | 3 | | 5BHCL-750E |
| 750 | 28.9 (734) | 4 (102) | 18.4 (467) | 40 | 2 | | 5CLE-750E |
| 900 | 25.1 (637) | 3 (76) | 23.7 (602) | 63 | 3 | | 5BHCL-900E |
| 1100 | 19.8 (503) | 4 (102) | 18.4 (467) | 31 | 4 | | 5CLE-1100E |
| 1350 | | | | | | | 5CLE-1350E |

† UL Listed, Guide JEEG, File E240398.

**Data sheet no. 10351**

## 8.3 kV E-Rated medium voltage ferrule fuses

### Catalog symbols

- 8CLE-_E-D (10-25 A)
- 8CLE-_E (10-350 A)
- 8HLE-_E (10-350 A)

### Ratings*

- Volts 8.3 kV
- Amps 10 to 350 A
- IR 50 kA RMS Sym.

* See catalog number tables for voltages, ampacities and interrupting ratings by catalog number.

### Agency information

- E-Rated fuses meet the performance characteristics of ANSI C37.46

### Dimensions — in (mm)

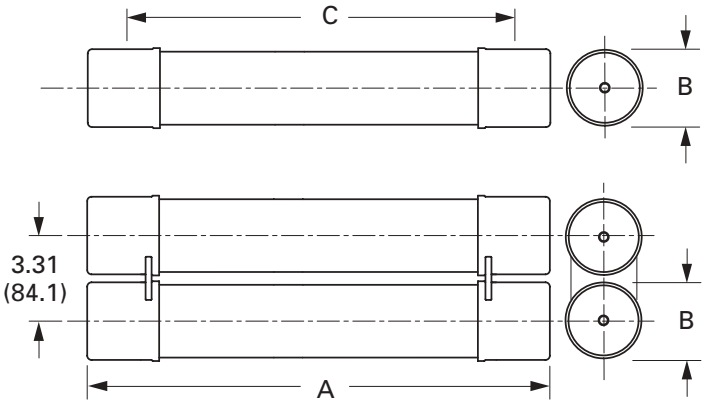


### Recommended fuseclips

| Description | Fuse dia. — in (mm) | Catalog no. |
|---|---|---|
| Enclosed fuseclip | 2 (51) | A3354710* |
| | 3 (76) | A3354730* |
| Open fuseclip | | 1A0065 |
| Spring loaded open fuseclip | | 9078A67G04 |

* For single barrel applications only. Not sold in pairs.

### Recommended fuse holders

| Amps | Fuse mounting type | BIL (kV) | Approx. dimensions — in (mm) Diameter A | Clip center B | Length C | Catalog no. Mounting* Porcelain insulator | Glass-polyester insulator | Live parts (with end fittings) | End fittings (disconnect only) |
|---|---|---|---|---|---|---|---|---|---|
| **CLE** | | | | | | | | | |
| 10E-D–25E-D 30E–175E Single barrel | Non-disconnect | 75 | 3.0 (76) | 14 (356) | 17.9 (455) | 8CLE-PNM-D | 8CLE-GNM-D | CLE-NL-D | — |
| | Disconnect† | | | | | 8CLE-PDM-D | 8CLE-GDM-D | CLE-DL-D | CLE-DF-D |
| 15E–25E Single Barrel | Non-disconnect | | 2.0 (51) | | 15.5 (394) | 8CLE-PNM-C | 8CLE-GNM-C | CLE-NL-C | — |
| | Disconnect† | | | | | 8CLE-PDM-C | 8CLE-GDM-C | CLE-DL-C | CLE-DF-C |
| 200E–350E Double barrel | Non-disconnect | | 3.0 (76) | | 17.9 (455) | 8CLE-PNM-E | 8CLE-GNM-E | CLE-NL-E | — |
| | Disconnect | | | | | 8CLE-PDM-E | 8CLE-GDM-E | CLE-DL-E | CLE-DF-E |
| **HLE** | | | | | | | | | |
| 10E-175E Single barrel | Non-disconnect | 75 | 3.0 (76) | 12 (305) | 15.9 (404) | 8HLE-PNM-D | 8HLE-GNM-D | CLE-NL-D | — |
| | Disconnect† | | | | | 8HLE-PDM-D | 8HLE-GDM-D | CLE-DL-D | CLE-DF-D |
| 200E–350E Double barrel | Non-disconnect | | | | | 8HLE-PNM-E | 8HLE-GNM-E | CLE-NL-E | — |
| | Disconnect† | | | | | 8HLE-PDM-E | 8HLE-GDM-E | CLE-DL-E | CLE-DF-E |

* Including live parts and end fittings, end fittings supplied only when required.
† Disconnect mountings provide a means for fuse extraction only. Do not use a disconnect mounting for load switching or fuse removal while energized.

## CLE and HLE Type fuses

| Amps | Dimensions — in (mm) Length A | Diameter B | Clip centers C | IR RMS Sym. (kA) | No. of barrels | Installation location | Catalog no. |
|---|---|---|---|---|---|---|---|
| **CLE Long construction (Westinghouse)** | | | | | | | |
| 10 | 17.9 (455) | 3 (76) | | | | Indoor/outdoor | 8CLE-10E-D |
| 15 | 15.5 (394) | 2 (51) | | | | Indoor | 8CLE-15E* |
| 15 | 17.9 (455) | 3 (76) | | | | Indoor/outdoor | 8CLE-15E-D |
| 20 | 15.5 (394) | 2 (51) | | | | Indoor | 8CLE-20E* |
| 20 | 17.9 (455) | 3 (76) | | | | Indoor/outdoor | 8CLE-20E-D |
| 25 | 15.5 (394) | 2 (51) | | | | Indoor | 8CLE-25E* |
| 25 | | | | | | | 8CLE-25E-D |
| 30 | | | | | 1 | | 8CLE-30E |
| 40 | | | | | | | 8CLE-40E |
| 50 | | | 14 (356) | 50 | | | 8CLE-50E |
| 65 | | | | | | | 8CLE-65E |
| 80 | | | | | | | 8CLE-80E |
| 100 | 17.9 (455) | 3 (76) | | | | Indoor/outdoor | 8CLE-100E |
| 125 | | | | | | | 8CLE-125E |
| 150 | | | | | | | 8CLE-150E |
| 175 | | | | | | | 8CLE-175E |
| 200 | | | | | | | 8CLE-200E |
| 250 | | | | | 2 | | 8CLE-250E |
| 300 | | | | | | | 8CLE-300E |
| 350 | | | | | | | 8CLE-350E |
| **HLE Short construction** | | | | | | | |
| 10 | | | | | | | 8HLE-10E |
| 15 | | | | | | | 8HLE-15E |
| 20 | | | | | | | 8HLE-20E |
| 25 | | | | | | | 8HLE-25E |
| 30 | | | | | | | 8HLE-30E |
| 40 | | | | | | | 8HLE-40E |
| 50 | | | | | 1 | | 8HLE-50E |
| 65 | | | | | | | 8HLE-65E |
| 80 | 15.9 (404) | 3 (76) | 12 (305) | 50 | | Indoor/outdoor | 8HLE-80E |
| 100 | | | | | | | 8HLE-100E |
| 125 | | | | | | | 8HLE-125E |
| 150 | | | | | | | 8HLE-150E |
| 175 | | | | | | | 8HLE-175E |
| 200 | | | | | | | 8HLE-200E |
| 250 | | | | | 2 | | 8HLE-250E |
| 300 | | | | | | | 8HLE-300E |
| 350 | | | | | | | 8HLE-350E |

* Fuses conform to dimensional standards established by Westinghouse.

**Data sheet no. 10352**

## 8.3 kV E-Rated medium voltage specialty mount fuses

### Catalog symbols

- 8AHLE-_E (special dimension fuses for use with 7.2 kV rated, 800 amp AMPGARD motor starting assemblies)
- 8BHLE-_E (bolt-on version)
- 8HCL-_E (clip-lock version)

### Ratings*

- Volts 8.3 kV
- Amps 10 to 350 A
- Interrupting rating 50 kA RMS Sym.

* See catalog number tables for voltages, ampacities and interrupting ratings by catalog number.

### Agency information

- E-Rated fuses meet the performance characteristics of ANSI C37.46

### Recommended live parts for clip-lock fuses

- Catalog number HCL-NL-1

### Dimensions for BHLE — in (mm)

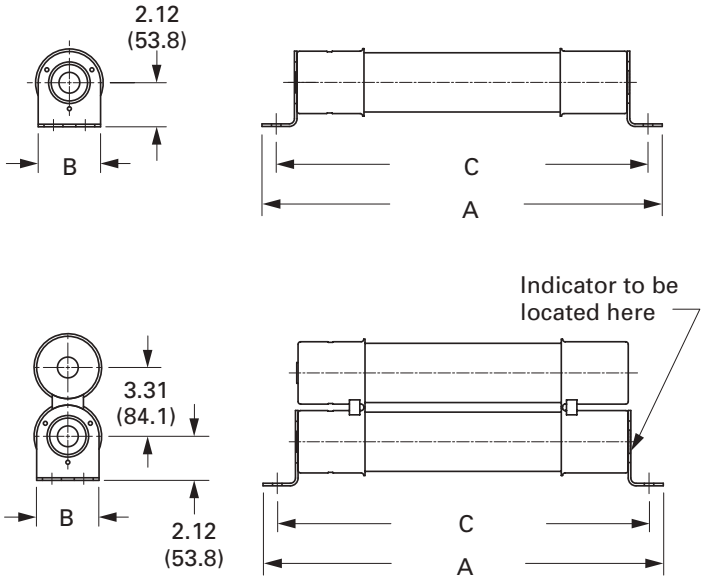


### Dimensions for HCL — in (mm)

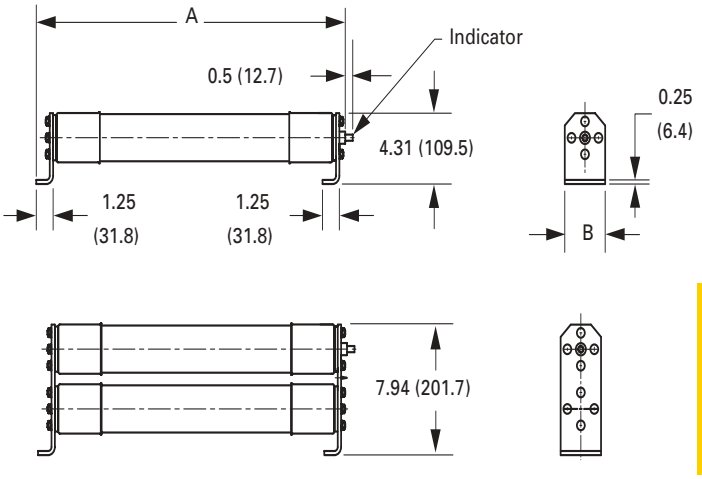

## AHLE Type fuses

Special dimension fuses for use with 7.2 kV rated, 800 amp AMPGARD motor starting assemblies.

| Amps | IR RMS Sym. (kA) | No. of barrels | Catalog no. |
|---|---|---|---|
| 10 | 50 | 1 | 8AHLE-10E |
| 15 | | | 8AHLE-15E |
| 20 | | | 8AHLE-20E |
| 25 | | | 8AHLE-25E |
| 30 | | | 8AHLE-30E |
| 40 | | | 8AHLE-40E |
| 50 | | | 8AHLE-50E |
| 65 | | | 8AHLE-65E |
| 80 | | | 8AHLE-80E |
| 100 | | | 8AHLE-100E |
| 125 | | | 8AHLE-125E |
| 150 | | | 8AHLE-150E |
| 175 | | | 8AHLE-175E |
| 200 | | 2 | 8AHLE-200E |
| 250 | | | 8AHLE-250E |
| 300 | | | 8AHLE-300E |
| 350 | | | 8AHLE-350E |

## BHLE bolt-on versions

| Amps | Dimensions — in (mm) | | | IR RMS Sym. (kA) | No. of barrels | Installation location | Catalog no. |
|---|---|---|---|---|---|---|---|
| | Overall length | Diameter | Hole centers | | | | |
| 10 | 19.25 (488.9) | 3 (76.2) | 17.88 (454.2) | 50 | 1 | Indoor | 8BHLE-10E |
| 15 | | | | | | | 8BHLE-15E |
| 20 | | | | | | | 8BHLE-20E |
| 25 | | | | | | | 8BHLE-25E |
| 30 | | | | | | | 8BHLE-30E |
| 40 | | | | | | | 8BHLE-40E |
| 50 | | | | | | | 8BHLE-50E |
| 65 | | | | | | | 8BHLE-65E |
| 80 | | | | | | | 8BHLE-80E |
| 100 | | | | | | | 8BHLE-100E |
| 125 | | | | | | | 8BHLE-125E |
| 150 | | | | | | | 8BHLE-150E |
| 175 | | | | | | | 8BHLE-175E |
| 200 | | | | | 2 | | 8BHLE-200E |
| 250 | | | | | | | 8BHLE-250E |
| 300 | | | | | | | 8BHLE-300E |
| 350 | | | | | | | 8BHLE-350E |

## HCL Clip lock versions

| Amps | Dimensions — in (mm) | | | IR RMS Sym. (kA) | No. of barrels | Installation location | Catalog no. |
|---|---|---|---|---|---|---|---|
| | Overall length | Diameter | Hole centers | | | | |
| 65 | 22.5 (571.5) | 3 (76.2) | N/A | 50 | 1 | Indoor/outdoor | 8HCL-65E |
| 80 | | | | | | | 8HCL-80E |
| 100 | | | | | | | 8HCL-100E |
| 125 | | | | | | | 8HCL-125E |
| 150 | | | | | | | 8HCL-150E |
| 175 | | | | | | | 8HCL-175E |
| 200 | | | | | 2 | | 8HCL-200E |
| 250 | | | | | | | 8HCL-250E |
| 300 | | | | | | | 8HCL-300E |
| 350 | | | | | | | 8HCL-350E |

**Data sheet no. 10352**

## 15.5 kV E-Rated medium voltage ferrule fuses

### Catalog symbols

- General purpose
  - 15CLE-_E-D (long construction, 10-25 A)
  - 15CLE-_E (long construction, 15-300 A)
  - 15HLE-_E (short construction, 10-250 A)
  - 15LHLE-_E (intermediate construction, 65-300 A)
- Full range (per ANSI C37.40)
  - MV155F_

### Ratings*

- Volts 15.5 kV
- Amps 10 to 300 A
- Interrupting ratings 31.5 to 63 kA RMS Sym.

* See catalog number tables for voltages, ampacities and interrupting ratings by catalog number.

### Agency information

- E-Rated fuses meet the performance characteristics of ANSI C37.46
- UL Listed, Guide JEEG, File E240398. See catalog numbers.

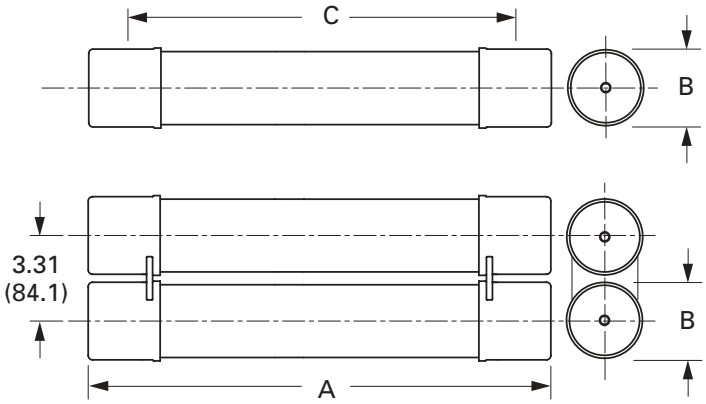


### Dimensions — in (mm)

### Recommended fuseclips

| Description | Fuse dia. — in (mm) | Catalog no. |
|---|---|---|
| Enclosed fuseclip | 2 (51) | A3354710* |
| | 3 (76) | A3354730* |
| Open fuseclip | | 1A0065 |
| Spring loaded open fuseclip | | 9078A67G04 |

* For single barrel applications only. Not sold in pairs.

### Recommended fuse holders

| Amps | Fuse mounting type | BIL (kV) | Approx. dimensions — in (mm) Diameter | Clip center | Length | Catalog no. Mounting* Porcelain insulator | Glass-polyester insulator | Live parts (with end fittings) | End fittings (disconnect only) |
|---|---|---|---|---|---|---|---|---|---|
| **CLE** | | | | | | | | | |
| 15E–25E Single barrel | Non-disconnect | 95 | 2 (51) | 20 (508) | 21.5 (546) | 15CLE-PNM-C | 15CLE-GNM-C | CLE-NL-C | — |
| | | 110 | | | | 15CLE-HPNM-C | — | CLE-NL-C | — |
| | Disconnect† | 95 | | | | 15CLE-PDM-C | 15CLE-GDM-C | CLE-DL-C | CLE-DF-C |
| | | 110 | | | | 15CLE-HPDM-C | — | CLE-DL-C | CLE-DF-C |
| 10E-D–25E-D 30E–150E Single barrel | Non-disconnect | 95 | 3 (76) | | 23.9 (607) | 15CLE-PNM-D | 15CLE-GNM-D | CLE-NL-D | — |
| | | 110 | | | | 15CLE-HPM-D | — | CLE-NL-D | — |
| | Disconnect† | 95 | | | | 15CLE-PDM-D | 15CLE-GDM-D | CLE-DL-D | CLE-DF-D |
| | | 110 | | | | 15CLE-HPDM-D | — | CLE-DL-D | CLE-DF-D |
| 175E–300E Double barrel | Non-disconnect | 110 | | | | 15CLE-PNM-E | — | CLE-NL-E | — |
| | Disconnect† | 110 | | | | 15CLE-PDM-E | — | CLE-DL-E | CLE-DF-E |
| **HLE** | | | | | | | | | |
| 10E-125E Single barrel | Non-disconnect | 95 | 3 (76) | 15 (381) | 18.9 (480) | 15HLE-PNM-D | 15HLE-GNM-D | CLE-NL-D | — |
| | Disconnect† | 95 | | | | 15HLE-PDM-D | 15HLE-GDM-D | CLE-DL-D | CLE-DF-D |
| 150E–250E Double barrel | Non-disconnect | 95 | | | | 15HLE-PNM-E | — | CLE-NL-E | — |
| | Disconnect† | 95 | | | | 15HLE-PDM-E | — | CLE-DL-E | CLE-DF-E |
| **LHLE** | | | | | | | | | |
| 65E–150E Single barrel | Non-disconnect | — | 3 (76) | 18 (457) | 20.53 (521) | Not available | Not available | CLE-NL-D | — |
| | Disconnect† | — | | | | | | CLE-DL-D | CLE-DF-D |
| 175E–300E Double barrel | Non-disconnect | — | | | | | | CLE-NL-E | — |
| | Disconnect† | — | | | | | | CLE-DL-E | CLE-DF-E |

* Including live parts and end fittings, end fittings supplied only when required.
† Disconnect mountings provide a means for fuse extraction only. Do not use a disconnect mounting for load switching or fuse removal while energized.

## CLE, HLE and LHLE Type general purpose fuses

| Amps | Dimensions — in (mm) Length A | Diameter B | Clip centers C | IR RMS Sym. (kA) | No. of barrels | Installation location | Catalog no. |
|---|---|---|---|---|---|---|---|
| **CLE Long construction** | | | | | | | |
| 10 | 23.9 (607) | 3 (76) | | 63 | | Indoor/outdoor | 15CLE-10E-D |
| 15 | 21.5 (546) | 2 (51) | | 31.5 | | Indoor | 15CLE-15E* |
| 15 | 23.9 (607) | 3 (76) | | 63 | | Indoor/outdoor | 15CLE-15E-D |
| 20 | 21.5 (546) | 2 (51) | | 31.5 | | Indoor | 15CLE-20E* |
| 20 | 23.9 (607) | 3 (76) | | 63 | | Indoor/outdoor | 15CLE-20E-D |
| 25 | 21.5 (546) | 2 (51) | | 31.5 | | Indoor | 15CLE-25E* |
| 25 | | | | | | | 15CLE-25E-D |
| 30 | | | | | 1 | | 15CLE-30E |
| 40 | | | | | | | 15CLE-40E† |
| 50 | | | 20 (508) | | | | 15CLE-50E† |
| 65 | | | | | | | 15CLE-65E† |
| 80 | | | | | | | 15CLE-80E† |
| 100 | 23.9 (607) | 3 (76) | | 63 | | Indoor/outdoor | 15CLE-100E† |
| 125 | | | | | | | 15CLE-125E† |
| 150 | | | | | | | 15CLE-150E† |
| 175 | | | | | | | 15CLE-175E† |
| 200 | | | | | 2 | | 15CLE-200E† |
| 250 | | | | | | | 15CLE-250E† |
| 300 | | | | | | | 15CLE-300E† |
| **HLE Short construction** | | | | | | | |
| 10 | | | | | | | 15HLE-10E |
| 15 | | | | | | | 15HLE-15E |
| 20 | | | | | | | 15HLE-20E |
| 25 | | | | | | | 15HLE-25E |
| 30 | | | | | | | 15HLE-30E |
| 40 | | | | | 1 | | 15HLE-40E† |
| 50 | | | | | | | 15HLE-50E† |
| 65 | 18.9 (480) | 3 (76) | 15 (381) | 63 | | Indoor/outdoor | 15HLE-65E† |
| 80 | | | | | | | 15HLE-80E† |
| 100 | | | | | | | 15HLE-100E† |
| 125 | | | | | | | 15HLE-125E† |
| 150 | | | | | | | 15HLE-150E† |
| 175 | | | | | 2 | | 15HLE-175E† |
| 200 | | | | | | | 15HLE-200E† |
| 250 | | | | | | | 15HLE-250E† |
| **LHLE** | | | | | | | |
| 65 | | | | | | | 15LHLE-65E |
| 80 | | | | | | | 15LHLE-80E |
| 100 | | | | | 1 | | 15LHLE-100E |
| 125 | | | | | | | 15LHLE-125E |
| 150 | 20.5 (521) | 3 (76) | 18 (457) | 50 | | Indoor/outdoor | 15LHLE-150E |
| 175 | | | | | | | 15LHLE-175E |
| 200 | | | | | 2 | | 15LHLE-200E |
| 250 | | | | | | | 15LHLE-250E |
| 300 | | | | | | | 15LHLE-300E |

* Fuses conform to dimensional standards established by Westinghouse.
† UL Listed, Guide JEEG, File E240398.

**Data sheet no. 10353**

**MV155F_ Full range**

| Amps | Dimensions — in (mm) Length A | Diameter B | Clip centers C | IR RMS Sym. (kA) | No. of barrels | Installation location | Catalog no. |
|---|---|---|---|---|---|---|---|
| 5 | | | | | | | MV155F1CBX5E |
| 7 | | 2 (51) | | | | | MV155F1CBX7E |
| 10 | | | | | | | MV155F1CBX10E |
| 10 | | 3 (76) | | | | | MV155F1DBX10E |
| 15 | | 2 (51) | | | | | MV155F1CBX15E |
| 15 | | 3 (76) | | | | | MV155F1DBX15E |
| 20 | | 2 (51) | | | | | MV155F1CBX20E |
| 20 | 18.7 (475) | 3 (76) | 15 (381) | | | | MV155F1DBX20E |
| 25 | | 2 (51) | | | | | MV155F1CBX25E |
| 25 | | 3 (76) | | | | | MV155F1DBX25E |
| 30 | | 2 (51) | | | 1 | | MV155F1CBX30E |
| 30 | | | | | | | MV155F1DBX30E |
| 40 | | | | | | | MV155F1DBX40E |
| 50 | | | | | | | MV155F1DBX50E |
| 65 | | | | 50 | | Indoor | MV155F1DBX65E |
| 65 | 21.7 (551) | | 18 (457) | | | | MV155F1DCX65E |
| 80 | 18.7 (475) | | 15 (381) | | | | MV155F1DBX80E |
| 80 | 21.7 (551) | | 18 (457) | | | | MV155F1DCX80E |
| 100 | 18.7 (475) | | 15 (381) | | | | MV155F1DBX100E |
| 100 | 21.7 (551) | 3 (76) | 18 (457) | | | | MV155F1DCX100E |
| 125 | 18.7 (475) | | 15 (381) | | | | MV155F2DBX125E |
| 125 | 21.7 (551) | | 18 (457) | | | | MV155F2DCX125E |
| 150 | 18.7 (475) | | 15 (381) | | | | MV155F2DBX150E |
| 150 | 21.7 (551) | | 18 (457) | | 2 | | MV155F2DCX150E |
| 175 | 18.7 (475) | | 15 (381) | | | | MV155F2DBX175E |
| 175 | 21.7 (551) | | 18 (457) | | | | MV155F2DCX175E |
| 200 | 18.7 (475) | | 15 (381) | | | | MV155F2DBX200E |
| 200 | 21.7 (551) | | 18 (457) | | | | MV155F2DCX200E |

## 15.5 kV E-Rated medium voltage specialty mount fuses

### Catalog symbols

- 15BHLE-_E (bolt-on version)
- 15HCL-_E (clip-lock version)

### Ratings*

- Volts 15.5 kV
- Amps 10 to 300 A
- Interrupting ratings 50 to 63 kA RMS Sym.

* See catalog number tables for voltages, ampacities and interrupting ratings by catalog number.

### Agency information

- E-Rated fuses meet the performance characteristics of ANSI C37.46

### Recommended live parts for clip-lock fuses

- Catalog number HCL-NL-1

### Dimensions — in (mm)

BHLE

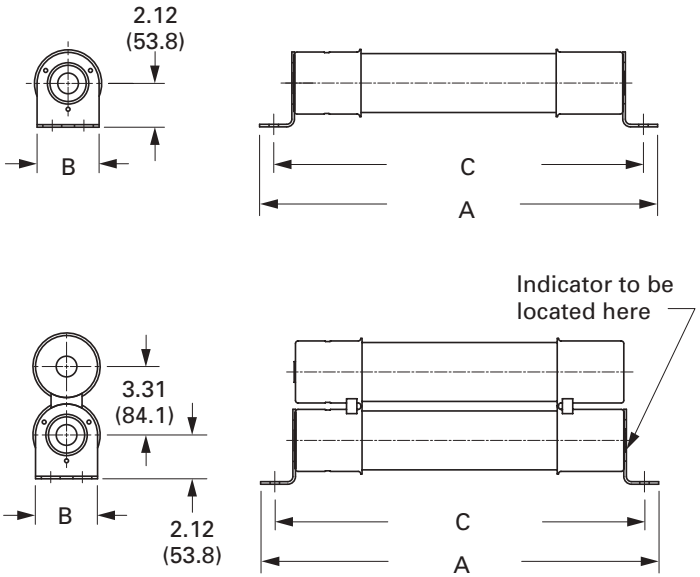


HCL

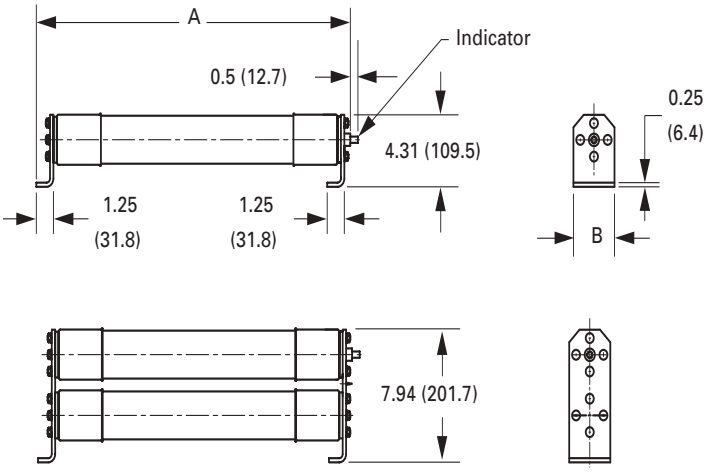


**Data sheet no. 10353**

## BHCL, BHLE and HCL Type fuses

| Amps | Dimensions — in (mm) Length A | Diameter B | Hole centers C | IR RMS Sym. (kA) | No. of barrels | Installation location | Catalog no. |
|---|---|---|---|---|---|---|---|
| **BHCL and BHLE bolt-on** | | | | | | | |
| 10 | | | | | | | 15BHLE-10E |
| 15 | | | | | | | 15BHLE-15E |
| 20 | | | | | | | 15BHLE-20E |
| 25 | | | | | | | 15BHLE-25E |
| 30 | | | | | | | 15BHLE-30E |
| 40 | | | | | 1 | | 15BHLE-40E† |
| 50 | | | | | | | 15BHLE-50E† |
| 65 | 22.2 (563) | | 20.9 (531) | 63 | | Indoor/outdoor | 15BHLE-65E† |
| 80 | | 3 (76) | | | | | 15BHLE-80E† |
| 100 | | | | | | | 15BHLE-100E† |
| 125 | | | | | | | 15BHLE-125E† |
| 150 | | | | | | | 15BHLE-150E† |
| 175 | | | | | | | 15BHLE-175E† |
| 200 | | | | | 2 | | 15BHLE-200E† |
| 250 | | | | | | | 15BHLE-250E† |
| 300 | 25.1 (637) | | 23.7 (602) | 50 | | Indoor | 15BHCL-300E |
| 400 | | | | | 3 | Indoor | 15BHCL-400E |
| **HCL clip-lock** | | | | | | | |
| 10 | | | | | | | 15HCL-10E |
| 15 | | | | | | | 15HCL-15E |
| 20 | | | | | | | 15HCL-20E |
| 25 | | | | | | | 15HCL-25E |
| 30 | | | | | | | 15HCL-30E |
| 40 | | | | | 1 | | 15HCL-40E† |
| 50 | | | | | | | 15HCL-50E† |
| 65 | | | | | | | 15HCL-65E† |
| 80 | 22.8 (579) | 3 (76) | N/A | 63 | | Indoor | 15HCL-80E† |
| 100 | | | | | | | 15HCL-100E† |
| 125 | | | | | | | 15HCL-125E† |
| 150 | | | | | | | 15HCL-150E† |
| 175 | | | | | | | 15HCL-175E† |
| 200 | | | | | 2 | | 15HCL-200E† |
| 250 | | | | | | | 15HCL-250E† |
| 300 | | | | | | | 15HCL-300E† |

† UL Listed, Guide JEEG, File E240398.

## 5.5 to 38 kV E-Rated DIN medium voltage fuses

Bussmann series DIN dimensioned E-Rated medium voltage power fuses with striker for indoor use. Available in general purpose (5.5 to 17.5 kV) and full range (25.8 to 38 kV) versions.

### Ratings

- Volts 5.5 - 38 kV
- Amps 10 - 450 A
- Interrupting ratings 25 to 65 kA

### Agency information

- General purpose E-Rated per ANSI C37.46 (5.5 to 17.5 kV)
- Full range E-Rated per ANSI C37.40 (25.8 to 38 kV)

### Striker force

- 50 N (11 lbs)

### Recommended fuseclips

See page 7-36 for dimensions.

| Amp range | Description | Catalog no. |
|---|---|---|
| Up to 200 A | Enclosed fuseclip with wingnut tensioner | A3354745* |
| | Open fuseclip with spring tensioner | 270303 |

* Not sold in pairs.

### Features

- Cool running for lower watts loss
- 100% X-ray inspected to help assure fuse integrity
- Striker provides visual indication of fuse operation or a means to activate a remote monitoring system

### Typical applications

- Primary protection for medium voltage transformers and switch gear
- Protection of medium voltage feeder circuits
- Direct OEM replacement fuses for 600 A Square D HVLCC and HVL switches

### Dimensions — in (mm)

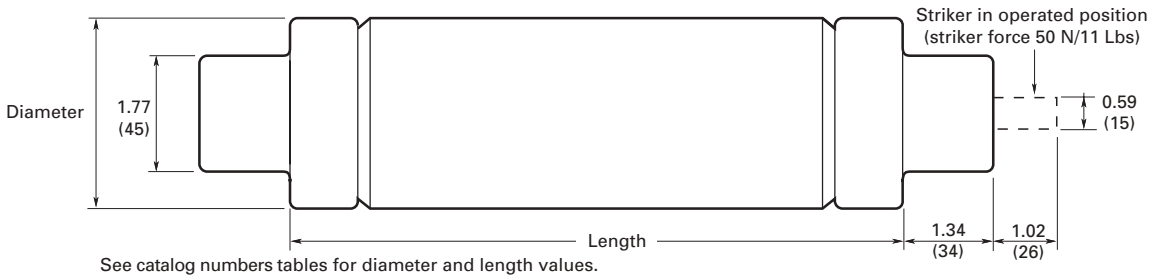


**Data sheet no. 10638**

| Catalog no. | Amps | Interrupting rating (Sym. kA) | Dimensions — in (mm) Length | Diameter |
|---|---|---|---|---|
| **General purpose versions** | | | | |
| **5.5 kV** | | | | |
| 55GDMSJ10E | 10 | 65 | 17.4 (442) | 2 (51) |
| 55GDMSJ15E | 15 | | | |
| 55GDMSJ20E | 20 | | | |
| 55GDMSJ25E | 25 | | | |
| 55GDMSJ30E | 30 | | | |
| 55GDMSJ40E | 40 | | | |
| 55GDMSJ50E | 50 | | | |
| 55GDMSJ65E | 65 | | | |
| 55GDMSJ80E | 80 | | | |
| 55GDMSJ100E | 100 | | | |
| 55GDMSJ125E | 125 | | | |
| 55GFMSJ150E | 150 | | 17.4 (442) | 3 (76) |
| 55GFMSJ175E | 175 | | | |
| 55GFMSJ200E | 200 | | | |
| 55GFMSJ250E | 250 | | | |
| 55GFMSJ300E | 300 | | | |
| 55GFMSJ350E | 350 | | | |
| 55GFMSJ400E | 400 | | | |
| 55GFMSJ450E | 450 | | | |
| **15.5 kV** | | | | |
| 155GXQSJ175E | 175 | 65 | 21.1 (537) | 3.5 (89) |
| 155GXQSJ200E | 200 | | | |
| **17.5 kV** | | | | |
| 175GDMSJ10E | 10 | 65 | 17.4 (442) | 2 (51) |
| 175GDMSJ15E | 15 | | | |
| 175GDMSJ20E | 20 | | | |
| 175GDMSJ25E | 25 | | | |
| 175GDMSJ30E | 30 | | | |
| 175GFMSJ40E | 40 | | 17.4 (442) | 3 (76) |
| 175GFMSJ50E | 50 | | | |
| 175GFMSJ65E | 65 | | | |
| 175GXMSJ80E | 80 | | 17.4 (442) | 3.5 (89) |
| 175GXMSJ100E | 100 | | | |
| 175GXQSJ125E | 125 | | 21.1 (537) | 3.5 (89) |
| 175GXQSJ150E | 150 | | | |
| **Full range versions** | | | | |
| **25.8 kV** | | | | |
| 258GDQSJ10E | 10 | 25 | 21.1 (537) | 2 (51) |
| 258GDQSJ15E | 15 | | | |
| 258GDQSJ20E | 20 | | | |
| 258GDQSJ25E | 25 | | | |
| 258GDQSJ30E | 30 | | | |
| 258GXQSJ40E | 40 | | 21.1 (537) | 3.5 (89) |
| 258GXQSJ50E | 50 | | | |
| 258GXQSJ65E | 65 | | | |
| 258GXZSJ80E | 80 | | 28.3 (718) | 3.5 (89) |
| 258GXZSJ100E | 100 | | | |
| **38 kV** | | | | |
| 38GFZSJ10E | 10 | 25 | 28.3 (718) | 3 (76) |
| 38GFZSJ15E | 15 | | | |
| 38GFZSJ20E | 20 | | | |
| 38GFZSJ25E | 25 | | | |
| 38GFZSJ30E | 30 | | | |

## 2.4 kV R-Rated fuses

### Catalog symbols/construction

- JCK-_R/Standard
- 2CLS-_R/Standard
- JCK-A-_R*/AMPGARD Hookeye
- 2ACLS-_R/AMPGARD Hookeye
- JCH-_R/Hermetically sealed AMPGARD
- 2HCLS-_R/Hermetically sealed AMPGARD
- JCK-B-_R/Bolt-on
- 2BCLS-_R/Bolt-on

* For use in 400 amp AMPGARD motor starters

### Ratings

- Volts
  - 2.4 kV (nominal)
  - 2.54 kV (max design)
- Amps 25-450 A
- Interrupting ratings
  - 50 kA Sym.
  - 80 kA Asym.

### Agency information

- UL Recognized: Guide MSSS2, File E96676 (JCK-_R [2R-12R] and JCK-A-_R [2R-12R])

### Recommended fuseclips and holders for standard constructions

| Amps | Description | Catalog no. |
|---|---|---|
| **Fuseclips** | | |
| 25-230A | 3" Enclosed fuseclip* | A3354730 |
| 25-450A | 3" Open fuseclip | 1A0065 |
| | 3" Spring loaded open fuseclip | 9078A67G04 |
| **Fuse holders** | | |
| 25-230A Single barrel | Non-disconnect holder, porcelain | 2CLE-PNM-D |
| | Non-disconnect holder, glass polyester | 2CLE-GNM-D |
| | Disconnect holder, porcelain | 2CLE-PDM-D |
| | Disconnect holder, glass polyester | 2CLE-GDM-E |
| 390-450A Double barrel | Non-disconnect holder, porcelain | 2CLE-PNM-E |
| | Non-disconnect holder, glass polyester | 2CLE-GNM-E |
| | Disconnect holder, porcelain | 2CLE-PDM-E |
| | Disconnect holder, glass polyester | 2CLE-GDM-E |

* Single barrel only, not sold in pairs.

### Dimensions — in (mm)

| Construction | Amps | Dimension A | Dimension B | Dimension C | Dimension D |
|---|---|---|---|---|---|
| Standard - short | 25-230A | 10.8 (274) | 3 (76) | 3 (76) | — |
| | 390-450A | | | | 3.3 (84) |
| AMPGARD Hookeye* | 70-230A | | | | — |
| | 390-450A | | | | 3.3 (84) |
| Bolt-on | 25-230A | 19.2 (488) | 17.9 (455) | | — |
| | 390-450A | | | | 3.3 (84) |

* Includes hermetically sealed versions.

Standard and AMPGARD Hookeye

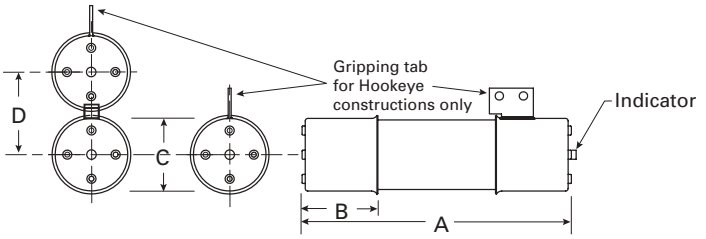


Bolt-on

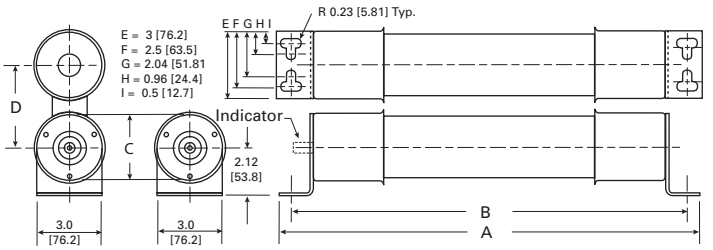


### 2.4 kV R-Rated fuse catalog numbers

| Amps | "R" Des. | Mounting style (minimum interrupting rating in amps): Standard | | Standard AMPGARD | | Hermetically sealed AMPGARD | | Bolt-on | | No. of barrels |
|---|---|---|---|---|---|---|---|---|---|---|
| 25 | — | — | 2CLS-25* (100) | — | 2ACLS-25* (90) | JCH-30* (90) | 2HCLS-25* (90) | JCK-B-25* (90) | 2BCLS-25* (90) | 1 |
| 70 | 2R | JCK-2R (165) | 2CLS-2R (180) | JCK-A-2R (165) | 2ACLS-2R (180) | JCH-2R (180) | 2HCLS-2R (180) | JCK-B-2R (180) | 2BCLS-2R (180) | |
| 100 | 3R | JCK-3R (220) | 2CLS-3R (270) | JCK-A-3R (220) | 2ACLS-3R (270) | JCH-3R (270) | 2HCLS-3R (270) | JCK-B-3R (270) | 2BCLS-3R (270) | |
| 130 | 4R | JCK-4R (320) | 2CLS-4R (360) | JCK-A-4R (320) | 2ACLS-4R (360) | JCH-4R (360) | 2HCLS-4R (360) | JCK-B-4R (360) | 2BCLS-4R (360) | |
| 150 | 5R | JCK-5R (410) | 2CLS-5R (450) | JCK-A-5R (410) | 2ACLS-5R (450) | JCH-5R (450) | 2HCLS-5R (450) | JCK-B-5R (450) | 2BCLS-5R (450) | |
| 170 | 6R | JCK-6R (480) | 2CLS-6R (540) | JCK-A-6R (480) | 2ACLS-6R (540) | JCH-6R (540) | 2HCLS-6R (540) | JCK-B-6R (540) | 2BCLS-6R (540) | |
| 200 | 9R | JCK-9R (720) | 2CLS-200* (740) | JCK-A-9R (720) | 2ACLS-200* (740) | JCH-200* (740) | 2HCLS-200* (740) | JCK-B-200* (740) | 2BCLS-200* (740) | |
| 230 | 12R | JCK-12R (970) | 2CLS-230* (1080) | JCK-A-12R (970) | 2ACLS-230* (1080) | JCH-230* (1080) | 2HCLS-230* (1080) | JCK-B-230* (1080) | 2BCLS-230* (1080) | |
| 390 | 18R | JCK-18R (1430)† | 2CLS-390* (1500) | JCK-A-18R (1430)† | 2ACLS-390* (1500) | JCH-390* (1500) | 2HCLS-390* (1500) | JCK-B-390* (1500) | 2BCLS-390* (1500) | 2 |
| 450 | 24R | JCK-24R (1880)† | 2CLS-450* (2200) | JCK-A-24R (1880)† | 2ACLS-450* (2200) | JCH-450* (2200) | 2HCLS-450* (2200) | JCK-B-450* (2200) | 2BCLS-450* (2200) | |

* Does not comply with ANSI C37.46 for "R" rating.
† Not UL Recognized.

### Data sheet no. 6001

## 4.8 kV R-Rated fuses

### Catalog symbols/construction

- 5CLS-30 and 5CLS-_R/Standard - short (30 A, 2R-24R)
- JCL-_R/Standard - short (2R - 24R)
- 5LCLS-_R/Standard - long (2R - 24R)
- 5ACLS-30 and 5ACLS-_R/AMPGARD Hookeye* (30 A, 2R-24R)
- JCL-A-_R/AMPGARD Hookeye* (2R - 24R)
- 5HCLS-30 and 5HCLS-_R/Hermetically sealed AMPGARD Hookeye* (30 A, 2R-24R)
- 5BCLS-30 and 5BCLS-_R/Bolt-on (30 A, 2R-44R)
- JCL-B-_R/Bolt-on (2R-24R)
- 5MCLS-_R-_A and 5MCLS-_R-_B/Bolt-on GE Limitamp (2R- 24R)

* For use in 400 amp AMPGARD motor starters

### Ratings

- Volts
  - 4.8 kV (nominal)
  - 5.0 kV (max design)
- Amps 30-800 A
- Interrupting ratings
  - 50 kA Sym.
  - 80 kA Asym.

### Agency information

- UL Recognized, Guide MSSS2
  - File E96676: JCL-_R [2R-12R], JCL-A-_R [2R-12R], 5MCLS-_R-A [2R-24R], and 5MCLS-_R-B [2R-24R]
  - File E60757: 5CLS-30, 5CLS-_R [2R-18R], 5ACLS-30, and 5ACLS-_R [2R-24R]

### Recommended fuseclips and holders for standard constructions

| Amps | Description | BIL (kV) | Catalog no. |
|---|---|---|---|
| **Fuseclips** | | | |
| 30-230A | 3″ Enclosed fuseclip* | — | A3354730 |
| 30-450A | 3″ Open fuseclip | | 1A0065 |
| | 3″ Spring loaded open fuseclip | | 9078A67G04 |
| **Fuse holders for CLS / JCL / 5HCLS** | | | |
| 30-230A Single barrel | Non-disconnect holder, porcelain | 60 | 5HLE-PNM-D |
| | Non-disconnect holder, glass polyester | | 5HLE-GNM-D |
| | Disconnect holder, porcelain | | 5HLE-PDM-D |
| | Disconnect holder, glass polyester | | 5HLE-GDM-D |
| 390-450A Double barrel | Non-disconnect holder, porcelain | | 5HLE-PNM-E |
| | Non-disconnect holder, glass polyester | | 5HLE-GNM-E |
| | Disconnect holder, porcelain | | 5HLE-PDM-E |
| | Disconnect holder, glass polyester | | 5HLE-GDM-E |
| **Fuse holders for 5LCLS†** | | | |
| 70-230A Single barrel | Non-disconnect holder, porcelain | 60 | 5CLE-PNM-D |
| | Non-disconnect holder, glass polyester | | 5CLE-GNM-D |
| | Disconnect holder, porcelain | | 5CLE-PDM-D |
| | Disconnect holder, glass polyester | | 5CLE-GDM-D |
| | Disconnect holder, porcelain | 75 | 8CLE-PDM-D |
| | Disconnect holder, glass polyester | | 8CLE-GDM-D |
| 390-450A Double Barrel | Disconnect holder, porcelain | 60 | 5CLE-PDM-E |
| | Disconnect holder, glass polyester | | 5CLE-GDM-E |

* Single barrel only, not sold in pairs.
**Not available for standard - long constructions
† Not available for 390 to 450 amp ratings.

### Dimensions — in (mm)

| Construction | Amp | Dimension A | B | C | D |
|---|---|---|---|---|---|
| Standard - short | 30-230 | 15.6 (396) | 3 (76) | 3 (76) | — |
| | 390-450 | | | | 3.3 (84) |
| Standard - long | 70-230 | 17.8 (452) | | | — |
| | 390-450 | | | | 3.3 (84) |
| AMPGARD Hookeye* | 30-230 | 15.6 (396) | | | — |
| | 390-450 | | | | 3.3 (84) |
| Bolt-on | 30-230 | 19.2 (488) | 17.9 (455) | | — |
| | 390-450 | | | | 3.3 (84) |
| | 600-800 | | | 4 (101) | 9 (229) |
| Limitamp (-A) | 70-230 | 18.3 (465) | 18.8 (478) | 1.4 (36) | 4.8 (122) |
| | 390-450 | | | | 7.4 (188) |
| Limitamp (-B) | 70-230 | | | | 3.0 (76) |
| | 390-450 | | | | 2.4 (61) |

* Includes hermetically sealed versions.

Ferrule JCL, 5LCLS, 5CLS and AMPGARD Hookeye

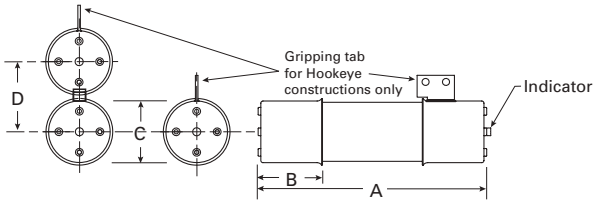


Bolt-on — 5BCLS-_

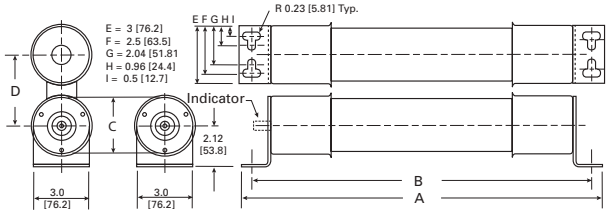


Bolt-on — 5MCLS-_R-A

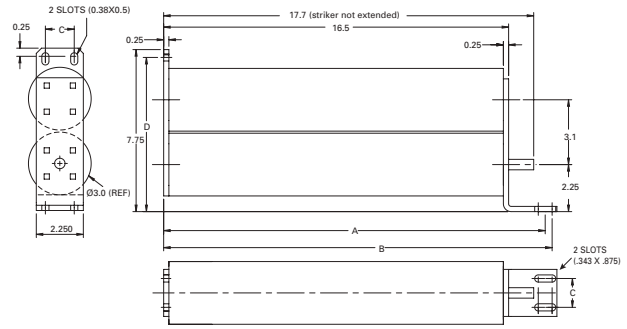


Bolt-on — 5MCLS-_R-B

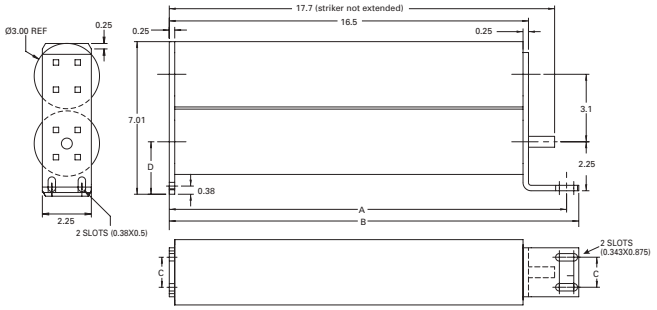


**Data sheet no. 6001**

Medium voltage fuses

## 4.8 kV R-Rated fuse catalog numbers

| Ferrule constructions (min. interrupting rating in amps) | | | | No. of barrels |
|---|---|---|---|---|
| Amps | Short | Short | Long | |
| 30 | 5CLS-30* (100) | — | — | 1 |
| 70 | 5CLS-2R (180) | JCL-2R (165) | 5LCLS-2R (180)† | |
| 100 | 5CLS-3R (270) | JCL-3R (220) | 5LCLS-3R (270)† | |
| 130 | 5CLS-4R (360) | JCL-4R (320) | 5LCLS-4R (360)† | |
| 150 | 5CLS-5R (450) | JCL-5R (410) | 5LCLS-5R (450)† | |
| 170 | 5CLS-6R (540) | JCL-6R (480) | 5LCLS-6R (540)† | |
| 200 | 5CLS-9R (740) | JCL-9R (720) | 5LCLS-9R (740)† | |
| 230 | 5CLS-12R (1080) | JCL-12R (970) | 5LCLS-12R (1080)† | |
| 390 | 5CLS-18R (1500) | JCL-18R (1430)† | 5LCLS-18R (1500)† | 2 |
| 450 | 5CLS-24R (2200)† | JCL-24R (1880)† | 5LCLS-24R (2200)† | |

* Does not comply with ANSI C37.46 for "R" rating.
† Not UL Recognized.

| AMPGARD Hookeye (min. interrupting rating in amps) | | | | No. of barrels |
|---|---|---|---|---|
| Amps | Hookeye | Hookeye | Hermetic seal | |
| 30 | 5ACLS-30* (100) | — | 5HCLS-30* (100)† | 1 |
| 70 | 5ACLS-2R (180) | JCL-A-2R (165) | 5HCLS-2R (180)† | |
| 100 | 5ACLS-3R (270) | JCL-A-3R (220) | 5HCLS-3R (270)† | |
| 130 | 5ACLS-4R (360) | JCL-A-4R (320) | 5HCLS-4R (360)† | |
| 150 | 5ACLS-5R (450) | JCL-A-5R (410) | 5HCLS-5R (450)† | |
| 170 | 5ACLS-6R (540) | JCL-A-6R (480) | 5HCLS-6R (540)† | |
| 200 | 5ACLS-9R (740) | JCL-A-9R (720) | 5HCLS-9R (740)† | |
| 230 | 5ACLS-12R (1080) | JCL-A-12R (970) | 5HCLS-12R (1080)† | |
| 390 | 5ACLS-18R (1500) | JCL-A-18R (1430)† | 5HCLS-18R (1500)† | 2 |
| 450 | 5ACLS-24R (2200) | JCL-A-24R (1880)† | 5HCLS-24R (2200)† | |

* Does not comply with ANSI C37.46 for "R" rating.
† Not UL Recognized.

| Bolt-on (min. interrupting rating in amps) | | | No. of barrels |
|---|---|---|---|
| Amps | Regular | Regular | |
| 30 | 5BCLS-30* (100)† | — | 1 |
| 70 | 5BCLS-2R (180)† | JCL-B-2R (165)† | |
| 100 | 5BCLS-3R (270)† | JCL-B-3R (220)† | |
| 130 | 5BCLS-4R (360)† | JCL-B-4R (320)† | |
| 150 | 5BCLS-5R (450)† | JCL-B-5R (410)† | |
| 170 | 5BCLS-6R (540)† | JCL-B-6R (480)† | |
| 200 | 5BCLS-9R (740)† | JCL-B-9R (720)† | |
| 230 | 5BCLS-12R (1080)† | JCL-B-12R (970)† | |
| 390 | 5BCLS-18R (1500)† | JCL-B-18R (1430)† | 2 |
| 450 | 5BCLS-24R (2200)† | JCL-B-24R (1880)† | |
| 600 | 5BCLS-32R (3000)† | — | |
| 650 | 5BCLS-36R (3200)† | — | |
| 800 | 5BCLS-44R (3600)† | — | |

* Does not comply with ANSI C37.46 for "R" rating.
† Not UL Recognized.

| GE Limitamp (min. interrupting rating in amps) | | | No. of barrels |
|---|---|---|---|
| Amps | Bolt-on | Bolt-on | |
| 30 | — | — | 1 |
| 70 | 5MCLS-2R-A (180) | 5MCLS-2R-B (180) | |
| 100 | 5MCLS-3R-A (270) | 5MCLS-3R-B (270) | |
| 130 | 5MCLS-4R-A (360) | 5MCLS-4R-B (360) | |
| 150 | 5MCLS-5R-A (450) | 5MCLS-5R-B (450) | |
| 170 | 5MCLS-6R-A (540) | 5MCLS-6R-B (540) | |
| 200 | 5MCLS-9R-A (850) | 5MCLS-9R-B (850) | |
| 230 | 5MCLS-12R-A (1150) | 5MCLS-12R-B (1150) | |
| 390 | 5MCLS-18R-A (1725) | 5MCLS-18R-B (1725) | 2 |
| 450 | 5MCLS-24R-A (2350) | 5MCLS-24R-B (2350) | |

* Does not comply with ANSI C37.46 for "R" rating.
† Not UL Recognized.

## 5CLS, JCL, JCL-A, 5ACLS and 5HCLS Type mountings — in (mm)

| Catalog no. | Hole centers A | Hole centers B | Overall length C | Hole inset D | Hole ctr. E | Contact hgt. F | Overall hgt. G | BIL (kV) |
|---|---|---|---|---|---|---|---|---|
| **Disconnect single barrel†** | | | | | | | | |
| 5CLE-GDM-D | 15.24 (387.1) | 6 (152.4) | 25 (647.7) | 0.62 (15.7) | 1.75 (44.4) | 4.5 (114.3) | 11.72 (297.7) | 60 |
| 5CLE-PDM-D | | | | | | | | |
| 5HLE-PDM-D | 16.25 (412.8) | | 23 (584.2) | | | | | |
| 5HLE-GDM-D | | | | | | | | |
| **Disconnect double barrel†** | | | | | | | | |
| 5CLE-GDM-E | 15.24 (387.1) | 6 (152.4) | 25 (647.7) | 0.62 (15.7) | 1.75 (44.4) | 4.5 (114.3) | 15.28 (388.1) | 60 |
| 5CLE-PDM-E | | | | | | | | |
| 5HLE-GDM-E | 16.25 (412.8) | | 23 (584.2) | | | | | |
| 5HLE-PDM-E | | | | | | | | |
| **Non-disconnect single barrel** | | | | | | | | |
| 5CLE-GNM-D | 15.24 (387.1) | 6 (152.4) | 25 (635.0) | 0.62 (15.7) | 1.75 (44.4) | 4.5 (114.3) | 8.79 (223.3) | 60 |
| 5CLE-PNM-D | | | | | | | | |
| 5HLE-GNM-D | 16.25 (412.7) | | 23 (584.2) | | | | | |
| 5HLE-PNM-D | | | | | | | | |
| **Non-disconnect double barrel** | | | | | | | | |
| 5HLE-PNM-E | 16.25 (412.7) | 6 (152.4) | 25 (635.0) | 0.62 (15.7)\ | 1.75 (44.4) | 4.5 (114.3) | 12.48 (317.0) | 60 |
| 5HLE-GNM-E | | | | | | | | |

**Data sheet no. 6001**

## 7.2 kV R-Rated fuses

### Catalog symbols/construction

- 8CLS-_R/Standard (2R - 6R)
- 8ACLS-_R/AMPGARD Hookeye* (2R - 6R)
- 7BCLS-_R/Bolt-on (2R - 6R)

* For use in 400 amp AMPGARD motor starters.

### Ratings

- Volts
  - 7.2 kV (nominal)
  - 8.3 kV (max design 70-170 A standard and AMPGARD Hookeye)
  - 7.2 kV (max design 70-170 A bolt-on)
- Amps 70-170 A
- Interrupting ratings
  - 50 kA Sym.
  - 80 kA Asym.

### Recommended fuseclips and holders for standard constructions

| Amps | Description | BIL (kV) | Cat. No. |
|---|---|---|---|
| **Fuseclips** | | | |
| 70-170 | 3″ Enclosed fuseclip* | — | A3354730 |
| | 3″ Open fuseclip | | 1A0065 |
| | 3″ Spring loaded open fuseclip | | 9078A67G04 |
| **Fuse holders for 7CLS and 8CLS** | | | |
| 70-170 | Non-disconnect holder, porcelain | 75 | 8HLE-PNM-D |
| | Non-disconnect holder, glass polyester | | 8HLE-GNM-D |
| | Disconnect holder, porcelain | | 8HLE-PDM-D |
| | Disconnect holder, glass polyester | | 8HLE-GDM-D |

* Single barrel only, not sold in pairs.

### Dimensions — in (mm)

| Construction | Amps | Dimension A | Dimension B | Dimension C |
|---|---|---|---|---|
| Standard | 70-170 | 15.8 (401) | 3 (76) | 3 (76) |
| AMPGARD Hookeye | | | | |
| Bolt-on | | 19.2 (488) | 17.9 (455) | |

Standard and AMPGARD Hookeye

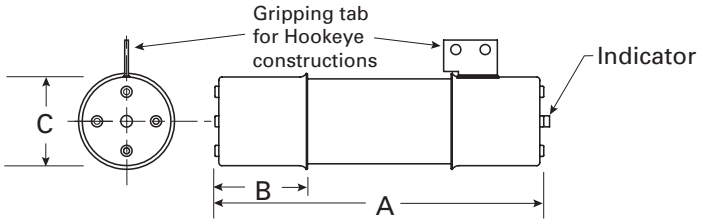


Bolt-on

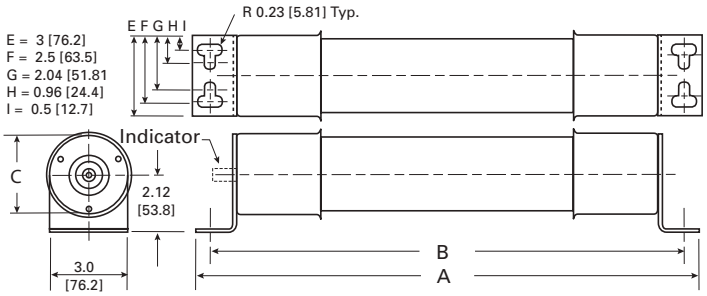


### 7.2 kV R-Rated fuse catalog numbers

| Amps | "R" Designation | Mounting style (minimum interrupting rating in amps): Standard | AMPGARD Hookeye | Bolt-on | No. of barrels |
|---|---|---|---|---|---|
| 70 | 2R | 8CLS-2R (160) | 8ACLS-2R (160) | 7BCLS-2R (160) | 1 |
| 100 | 3R | 8CLS-3R (250) | 8ACLS-3R (250) | 7BCLS-3R (250) | |
| 130 | 4R | 8CLS-4R (325) | 8ACLS-4R (325) | 7BCLS-4R (325) | |
| 150 | 5R | 8CLS-5R (390) | 8ACLS-5R (390) | 7BCLS-5R (390) | |
| 170 | 6R | 8CLS-6R (500) | 8ACLS-6R (500) | 7BCLS-6R (500) | |

## E-Rated PT medium voltage fuses

### Dimensions — in (mm)

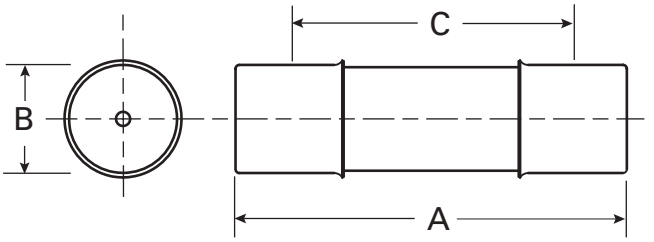


### Catalog symbols (by maximum voltage rating)

- 2.475 kV
  - 2NCLPT-_
- 3.6 kV
  - 3.6ABCNA_
  - 3.6ABWNA_
  - 3.6CAV_
- 5.5 kV
  - JCW-_
  - 5CLPT-_E
  - 5NCLPT-_E
  - 5NCLPT-_E-A
  - 5.5ABWNA_E
  - 5.5AMWNA_E
  - 5.5CAV_E
  - 5.5CAVH_E
- 7.2 kV
  - 7.2ABWNA_
  - 7.2ABCNA_
  - 7.2AMWNA_E
  - 7.2CAV_
- 8.3 kV
  - 8CLPT-_E-A
  - 8NCLPT-_E
  - 8NCLPT-_E-A
  - 8NCLPT-_E-B
- 12 kV
  - 12ABCNA_
  - 12CAV_
- 15.5 kV
  - 15CLPT-_E
  - 15NCLPT-_E-A
  - 15NCLPT-_E-B
  - 15.5CAV_E
  - 15.5CAVH_E
- 17.5 kV
  - 17.5ABGNA_
  - 17.5CAV_
- 24 kV
  - 24ABGNA_
  - 24CAV_
- 25.5 kV
  - 25CLPT-_E
- 36 kV
  - 36ABGNA_
  - 36CAV_
- 38 kV
  - 38CAV_E
  - 38CAVH_E
  - 38CLPT-_E

### Recommended fuseclip and block

| Description | Catalog no. |
|---|---|
| Open fuseclip for 0.8 (20 mm) dia. fuses | 1A1837 |
| Single-pole open fuse block with #10-32 phil-slot screw terminals rated 2500 V, 5 A maximum and 63 kA withstand rating | PTFB-2500-JCD |

### Ratings*

- Volts 2.4 kV to 38 kV
- Amps 0.25 to 15 A
- Interrupting ratings 25 to 80 kA RMS Sym.

* See catalog number tables for voltages, ampacities and interrupting ratings by catalog number.

### Agency information

- PT fuses conforming to the requirements for E-Rating meet the performance characteristics of IEEE/ANSI C37.46

**Data sheet no. 6002**

## 2.475 to 38 kV PT E-Rated fuses

| Amps | Dimensions — in (mm) | | | Catalog no. (IR - kA) | | Recommended fuseclip |
|---|---|---|---|---|---|---|
| | Length A | Diameter B | Clip centers C | Indicating | Non-indicating | |
| **2.475 kV maximum system voltage** | | | | | | |
| 0.25 | 4.5 (114) | 0.8 (20) | 3.9 (99) | — | 2NCLPT-.25E (63) | 1A1837 |
| 0.5 | | | | — | 2NCLPT-.5E (63) | |
| 1 | | | | — | 2NCLPT-1E (40) | |
| 2 | | | | — | 2NCLPT-2E (40) | |
| 5 | | | | — | 2NCLPT-5E (25) | |
| **3.6 kV maximum system voltage** | | | | | | |
| 2 | 8.7 (221) | 1.6 (41) | 7.6 (193) | — | 3.6CAV2 (50) | 1A1837 |
| 3.15 | 5.6 (142) | 1 (25) | 4.4 (112) | — | 3.6ABWNA3.15 (50) | A3354705 |
| 3.15 | 7.7 (195) | | 6.5 (165) | — | 3.6ABCNA3.15 (50) | |
| 6.3 | 5.6 (142) | | 4.4 (112) | — | 3.6ABWNA6.3 (50) | |
| 6.3 | 7.7 (195) | | 6.5 (165) | — | 3.6ABCNA6.3 (50) | |
| 10 | | | | — | 3.6ABCNA10 (50) | |
| **5.5 kV maximum system voltage** | | | | | | |
| 0.5 | 5.6 (142) | 0.8 (20) | 4.8 (122) | — | 5.5AMWNA0.5E (50) | 1A1837 |
| 0.5 | | 1 (25) | 4.4 (112) | — | 5.5ABWNA0.5E (50) | A3354705 |
| 0.5 | 7.4 (188) | 1.6 (41) | 6.2 (157) | 5.5CAVH0.5E (50) | JCW-1/2E (40) | 1A0835 |
| 0.5 | 9.5 (241) | 1.6 (41) | 8.1 (206) | 5CLPT-.5 (50)† | 5NCLPT-.5E-A (50) | 1A0835 |
| 1 | 5.6 (142) | 1 (25) | 4.4 (112) | — | 5.5ABWNA1E (50) | A3354705 |
| 1 | | 0.8 (20) | 4.8 (122) | — | 5.5AMWNA1.0E (50) | 1A1837 |
| 1 | 7.4 (188) | 1.6 (41) | 6.2 (157) | 5.5CAVH1E (50) | JCW-1E (40) | 1A0835 |
| 1 | 9.5 (241) | | 8.1 (206) | 5CLPT-1 (50)† | 5NCLPT-1E-A (50) | |
| 1.5 | | | | 5CLPT-1.5 (50)† | — | |
| 2 | 5.6 (142) | 1 (25) | 4.4 (112) | — | 5.5ABWNA2E (50) | A3354705 |
| 2 | | 0.8 (20) | 8.1 (206) | — | 5NCLPT-2E (50) | 1A1837 |
| 2 | | | 4.8 (122) | — | 5.5AMWNA2.0E (50) | |
| 2 | 7.4 (188) | 1.6 (41) | 6.2 (157) | 5.5CAVH2E (50) | JCW-2E (40) | 1A0835 |
| 3 | 5.6 (142) | 1 (25) | 4.4 (112) | — | 5.5ABWNA3E (50) | A3354705 |
| 3 | | 0.8 (20) | 4.8 (122) | — | 5.5AMWNA3.0E (50) | 1A1837 |
| 3 | 9.5 (241) | 1.6 (41) | 8.1 (206) | 5CLPT-3E (50) | 5NCLPT-3E (50) | 1A0835 |
| 3 | 7.4 (188) | | 6.2 (157) | — | JCW-3E (40) | |
| 4 | 5.6 (142) | 0.8 (20) | 4.8 (122) | — | 5.5AMWNA4.0E (50) | 1A1837 |
| 5 | 9.5 (241) | 1.6 (41) | 8.1 (206) | 5CLPT-5E (50) | 5NCLPT-5E-A (50) | 1A0835 |
| 5 | 5.6 (142) | 1 (25) | 4.4 (112) | — | 5.5ABWNA5E (50) | A3354705 |
| 5 | | 0.8 (20) | 4.8 (122) | — | 5.5AMWNA5.0E (50) | 1A1837 |
| 5 | 7.3 (185) | 1.6 (41) | 5.9 (150) | — | JCW-5E (40) | 1A0835 |
| 10 | 9.5 (241) | | 8.1 (206) | 5CLPT-10E (50) | 5NCLPT-10E (50) | |
| 15 | 7.4 (188) | | 6.2 (157) | — | 5.5CAV15E (50) | |

† Due to manufacturing variations, this fuse does not comply with ANSI C37.46 for "E" rating.

## 2.475 to 38 kV PT E-Rated fuses

| Amps | Dimensions — in (mm) Length A | Diameter B | Clip centers C | Catalog no. (IR - kA) Indicating | Non-indicating | Recommended fuseclip |
|---|---|---|---|---|---|---|
| **7.2 kV maximum system voltage** | | | | | | |
| 0.5 | 5.6 (142) | 0.8 (20) | 4.8 (122) | — | 7.2AMWNA0.5E (50) | 1A1837 |
| 1 | | | | | 7.2AMWNA1.0E (50) | |
| 2 | | | | | 7.2AMWNA2.0E (50) | |
| 2 | 8.7 (221) | 1.6 (41) | 7.5 (190) | | 7.2CAV2 (40) | 1A0835 |
| 3 | 5.6 (142) | 0.8 (20) | 4.8 (122) | | 7.2AMWNA3.0E (50) | 1A1837 |
| 3.15 | 5.6 (142) | 1 (25.4) | 4.4 (112) | | 7.2ABWNA3.15 (45) | A3354705 |
| 3.15 | 7.7 (195) | | 6.5 (165) | | 7.2ABCNA3.15 (45) | |
| 4 | 5.6 (142) | 0.8 (20) | 4.8 (122) | | 7.2AMWNA4.0E (50) | 1A1837 |
| 4 | 8.7 (221) | 1.6 (41) | 7.5 (190) | | 7.2CAV4 (40) | 1A0835 |
| 5 | 5.6 (142) | 0.8 (20) | 4.8 (122) | | 7.2AMWNA5E (50) | 1A1837 |
| 6 | 8.7 (221) | 1.6 (41) | 7.5 (190) | | 7.2CAV6 (40) | 1A0835 |
| 6.3 | 5.6 (142) | 1 (25.4) | 4.4 (112) | | 7.2ABWNA6.3 (45) | A3354705 |
| 6.3 | 7.7 (195) | | 6.5 (165) | | 7.2ABCNA6.3 (45) | |
| 10 | 8.7 (221) | 1.6 (41) | 7.5 (190) | | 7.2CAV10 (40) | 1A0835 |
| **8.3 kV maximum system voltage** | | | | | | |
| 0.5 | 9.5 (241) | 1.6 (41) | 8.1 (206) | 8CLPT-.5E (50)† | 8NCLPT-.5E-A (50) | 1A0835 |
| 1 | 5 (127) | 1.1 (28) | 4 (102) | — | 8NCLPT-1E (50) | A3354705 |
| 1 | 9.5 (241) | 1.6 (41) | 8.1 (206) | | 8NCLPT-1E-A (50) | 1A0835 |
| 2 | 8 (203) | 0.8 (20) | 7.2 (183) | | 8NCLPT-2E (25) | 1A1837 |
| 2 | 9.5 (241) | 1.6 (41) | 8.1 (206) | | 8NCLPT-2E-A (50) | 1A0835 |
| 3 | 12.9 (328) | | 11.5 (292) | 8CLPT-3E (50) | 8NCLPT-3E-B (50) | |
| 4 | 8 (203) | 0.8 (20) | 7.2 (183) | — | 8NCLPT-4E (25) | 1A1837 |
| 5 | 5 (127) | 1.1 (28) | 4 (102) | | 8NCLPT-5E (50) | A3354705 |
| 5 | 12.9 (328) | 1.6 (41) | 11.5 (292) | 8CLPT-5E (50) | 8NCLPT-5E-B (50) | 1A0835 |
| 8 | 5 (127) | 1.1 (28) | 4 (102) | — | 8NCLPT-8E | A3354705 |
| 10 | 12.9 (328) | 1.6 (41) | 11.5 (292) | 8CLPT-10E (50) | 8NCLPT-10E-B (50) | 1A0835 |
| **12 kV maximum system voltage** | | | | | | |
| 2 | 8.7 (221) | 1.6 (41) | 7.5 (190) | — | 12CAV2 (40) | 1A0835 |
| 3.15 | 7.7 (195) | 1 (25) | 6.5 (165) | | 12ABCNA3.15 (45) | A3354705 |
| **15.5 kV maximum system voltage** | | | | | | |
| 0.5 | 12.9 (328) | 1.6 (41) | 11.5 (292) | 15.5CAVH0.5E (80) | 15NCLPT-.5E-A (50) | 1A0835 |
| 1 | 12.9 (328) | | 11.5 (292) | 15.5CAVH1E (80) | 15NCLPT-1E-A (50) | |
| 2 | 12.9 (328) | | 11.5 (292) | 15.5CAVH2E (80) | 15NCLPT-2E (50) | |
| 3 | 12.9 (328) | | 11.5 (292) | — | 15.5CAV3E (80) | |
| 3 | 17.6 (447) | | 16.1 (409) | — | 15NCLPT-3E (50) | |
| 3 | 17.6 (447) | | 16.1 (409) | 15CLPT-3E (50) | — | |
| 5 | 12.9 (328) | | 11.5 (292) | — | 15.5CAV5E (80) | |
| 5 | 17.6 (447) | | 16.1 (409) | 15CLPT-5E (50) | 15NCLPT-5E (50) | |
| 7 | 12.9 (328) | | 11.5 (292) | — | 15.5CAV7E (80) | |
| 10 | 17.6 (447) | | 16.1 (409) | 15CLPT-10E (50) | 15NCLPT-10E (50) | |
| **17.5 kV maximum system voltage** | | | | | | |
| 2 | 8.7 (221) | 1.6 (41) | 7.5 (190) | — | 17.5CAV2 (40) | 1A0835 |
| 4 | | | | | 17.5CAV4 (40) | |
| 6 | | | | | 17.5CAV6 (40) | |
| 10 | | | | | 17.5CAV10 (40) | |

† Does not comply with ANSI C37.46 for "E" rating.

**Data sheet no. 6002**

### 2.475 to 38 kV PT E-Rated fuses

| Amps | Dimensions — in (mm) Length A | Diameter B | Clip centers C | Catalog no. (IR - kA) Indicating | Non-indicating | Recommended fuseclip |
|---|---|---|---|---|---|---|
| **24 kV maximum system voltage** | | | | | | |
| 2 | 13.49 (340) | 1.6 (41) | 12.2 (310) | — | 24CAV2 (40) | 1A0835 |
| 3 | | | | — | 24CAV3 (40) | |
| 4 | | | | — | 24CAV4 (40) | |
| **25.5 kV maximum system voltage** | | | | | | |
| 0.5 | 17.6 (447) | 1.6 (41) | 16.1 (410) | 25CLPT-.5 (43.5)† | — | 1A0835 |
| 1 | | | | 25CLPT-1 (43.5)† | — | |
| **36 kV maximum system voltage** | | | | | | |
| 2 | 17.3 (439) | 1.6 (41) | 16.1 (410) | — | 36CAV2 (40) | 1A0835 |
| 4 | | | | — | 36CAV4 (40) | |
| **38 kV maximum system voltage** | | | | | | |
| 0.5 | 17.3 (439) | 1.6 (41) | 16.1 (409) | 38CAVH0.5E (40) | — | 1A0835 |
| 0.5 | 18.6 (472) | | 17.1 (434) | 38CLPT-0.5 (43.5)† | — | |
| 1 | 17.3 (439) | | 16.1 (409) | 38CAVH1E (40) | — | |
| 2 | | | | 38CAVH2E (40) | — | |
| 4 | | | | — | 38CAV4E (40) | |

† Does not comply with ANSI C37.46 for "E" rating.

### CLPT Type mountings and hardware

| Amps | Fuse mounting type* | BIL (kV) | Catalog no. Mounting (including live parts, end fittings)** Porcelain insulator | Glass-polyester insulator | Live parts (including end fittings)*** | End fittings (disconnect only) |
|---|---|---|---|---|---|---|
| **5.5 kV maximum (4.8 kV nominal)†** | | | | | | |
| 0.5–10 | Non-disconnect | 60 | 5CLPT-PNM-A | 5CLPT-GNM-A | CLPT-NL | — |
| | Disconnect†† | | 5CLPT-PDM-A | 5CLPT-GDM-A | CLPT-DL | CLPT-DF |
| **8.3 kV maximum (7.2 kV nominal)†** | | | | | | |
| 0.5–2 | Non-disconnect | 75 | 8CLPT-PNM-A | 8CLPT-GNM-A | CLPT-NL | — |
| | Disconnect†† | | 8CLPT-PDM-A | 8CLPT-GDM-A | CLPT-DL | CLPT-DF |
| 3–10 | Non-disconnect | | 8CLPT-PNM-B | 8CLPT-GNM-B | CLPT-NL | — |
| | Disconnect†† | | 8CLPT-PDM-B | 8CLPT-GDM-B | CLPT-DL | CLPT-DF |
| **15.5 kV maximum (14.4 kV nominal)** | | | | | | |
| 0.5–2 | Non-disconnect | 95 | 15CLPT-PNM-A | 15CLPT-GNM-A | CLPT-NL | — |
| | Disconnect†† | | 15CLPT-PDM-A | 15CLPT-GDM-A | CLPT-DL | CLPT-DF |
| 3–10 | Non-disconnect | | 15CLPT-PNM-B | 15CLPT-GNM-B | CLPT-NL | CLPT-DF |
| | Disconnect†† | | 15CLPT-PDM-B | 15CLPT-GDM-B | CLPT-DL | — |
| **25.5 kV Maximum (23 kV Nominal)** | | | | | | |
| 0.5–1 | Non-disconnect | 150 | 25CLPT-PNM-A | — | 25CLPT-NL | — |
| | Disconnect†† | | 25CLPT-PDM-A | | 25CLPT-DL | CLPT-DF |
| **38 kV Maximum (34.5 kV Nominal)** | | | | | | |
| 0.5 | Disconnect†† | N/A | Not applicable | Not applicable | CLPT-NL | CLPT-DF |
| | Non-disconnect | | 38CLPT-PNM-A | | CLPT-DL | — |

* See page 7-35 for dimensions and diagrams of typical mountings.
**End fittings supplied only when required.
† Refers to 5CLPT, 5NCLPT, 8CLPT and 8NCLPT-A or -B fuses only.
††Disconnect mountings provide a means for fuse extraction only. Do not use a disconnect mounting for load switching or fuse removal while energized.

# HVA, HVB, HVJ, HVL, HVR, HVT, HVU, HVW and HVX fast-acting PT fuses

Medium voltage, non-time delay, fast-acting fuses.

## Ratings*

- Volts 1-10 kV
- Amps 1/16-10 A

* See catalog number table for possible volt/amp combinations.

## Features

- Physical size varies with electrical rating of fuse to prevent overfusing
- Space-saving size

## Typical applications

- Medium voltage instrument and circuit protection

## Test specifications

| Catalog symbol | Percent load | Opening time |
|---|---|---|
| HVA, HVB, HVJ, HVL | 110 | 4 hours (min) |
| | 135 | 1 hour (max) |
| HVR, HVT, HVU, HVW, HVX | 100 | 4 hours (min) |
| | 150 | 1 hour (max) |

## Recommended fuseclips and blocks

| Fuse catalog symbol | Block catalog no. | Fuseclip catalog no. |
|---|---|---|
| HVA, HVR | 4528* | 5960 |
| HVB, HVT | 4529* | |
| HVJ, HVU | — | 4180 |
| HVL, HVX | | |

* Use #8 screws.

| Catalog symbol | kV | Amps | Max. IR (amps) | Dimensions — in (mm) Diameter | Dimensions — in (mm) Length |
|---|---|---|---|---|---|
| HVA | 1 | 1/16, 1/10, 1/8, 2/10, 1/4, 3/8, 1/2, 3/4, 1, 1-1/2, 2, 3, 4, 6, 10 | 20 DC / 30 AC | 0.4 (10) | 3 (76) |
| HVB | 2.5 | 1/2, 3/4, 1, 1-1/2, 2, 3 | 8 DC / 12 AC | | 4.5 (114) |
| HVJ | 5 | 1/16, 1/8, 1/4, 1/2, 3/4, 1, 1-1/2, 2, 4, 6* | 4 DC / 6 AC | 0.8 (21) | 5 (126.9) |
| HVL | 10 | 1/16, 1/8, 1/4, 1/2, 1, 1-1/2, 2, 3* | 2 DC / 3 AC | | 10 (254) |
| HVR | 1 | 1/2, 1, 2, 3, 4, 5 | 500 AC | 0.4 (10) | 3 (76) |
| HVW | 1.2 | 1, 2, 3, 4, 5, 8 | 4 DC / 167 AC | | 2.3 (57) |
| HVT | 2.5 | 1/2, 1, 2, 3, 5 | 500 AC | | 4.5 (114) |
| HVU | 5 | 1/2, 1, 2, 3, 4, 5 | 500 AC | 0.8 (20) | 5 (127) |
| HVX | 10 | 1/2, 1, 3, 5 | 1200 AC | | 10 (254) |

* AC only.

## Catalog number build-a-code

Fuse catalog symbol Amps

_ _ _ _ _ - _ _ _

E.g., HVB-3/4 (2.5 kV 3/4 amp fuse)

**Data sheet no. 6003**

## British standard dimensioned IEC fuses for motor circuit protection

The Bussmann series IEC motor fuses are designed to meet the specific requirements necessary for motor protection. During the starting cycle of direct on-line motors, the fuse elements will reach a considerably higher temperature than during normal operation; (this is due to the high amount of current the motor will draw as it starts, typically, six times its normal load current value). This results in expansion and contraction of the fuse elements and could cause premature operation of the fuse.

Bussmann series motor fuses encompass an advanced design to minimize this effect. This, therefore, negates the need to over specify the fuse rating due to high values of motor starting current.

These motor fuses operate extremely quickly under heavy fault currents, resulting from the time / current characteristic. Low power dissipation ensures low temperature rise, important in multi-tier starters for example. Switching (arc), voltages are lower than permitted values, therefore, 5.5 kV fuses are also suitable for 4.8 kV and 2.4 kV circuits.

| Catalog symbol | kV | IR (kA) | Amps/rating | Dimensions — in (mm) Length | Dimensions — in (mm) Diameter | Dimension standard |
|---|---|---|---|---|---|---|
| 3.6WJON6 | 3.6 | 50 | 5, 6.3, 10, 16, 20, 25, 31.5, 40, 50 | 7.6 (192) | 1.4 (36) | BS 2692 (TA1) Interchangeable with GEC Type K2 PA |
| 3.6WDOH6 | | | 50, 63, 80, 100, 125 | | 2 (51) | BS 2692 (TA1) or DIN 43625 |
| 3.6WFOH6 | | | 160, 200 | | 3 (76) | |
| 3.6WDLSJ | | | 50, 63, 80, 100, 125 | 11.5 (292) | 2 (51) | DIN 43625 |
| 3.6WFLSJ | | | 160, 200 | | 3 (76) | |
| 3.6WDFHO | | | 50, 63, 80, 100, 125 | 10 (254) | 2 (51) | BS 2692 (TA2) |
| 3.6WFFHO | | | 160, 200 | | 3 (76) | |
| 3.6WKFHO | | | 250, 315, 355, 400 | | | |
| 5.5VFNHA | 5.5 | 60 | 2R, 3R, 4R, 6R | 15.9 (403) | | ANSI R-Rated |
| 5.5VKNHA | | | 9R, 12R, 18R, 24R | | | |
| 7.2WFNHO | 7.2 | 40 | 25, 31.5, 40, 50, 63, 80, 100, 125, 160 | | | BS 2692 (TA4) |
| 7.2WKNHO | | | 200, 224, 250, 315 | | | |
| 7.2WFMSJ | | 63 | 25, 31.5, 40, 50, 63, 80, 125, 160 | 17.4 (442) | | DIN 43625 |
| 7.2WKMSJ | | | 200, 224, 250, 315, 355 | | | |

### Catalog number build-a-code

Fuse catalog symbol Amps

_ _ _ _ _ - _ _ _

E.g., 3.6WKFHO-315 (315 amp 3.6 kV fuse)

## DIN dimensioned IEC fuses for transformer protection

DIN dimension fuses to Specification DIN 43625 covering current-limiting fuses with performance in compliance with IEC 60282-1. These are in accordance with the R10 and, in some cases, the R20 series of preferred numbers.

### Ratings*

- Volts 3.6-36 kV
- Amps 6.3-100 A
- Interrupting ratings 20-50 kA

* See catalog number table for possible volt/amp combinations.

### Agency information

- Compliant with DIN dimensional standard DIN 43625, VDE 0670 part 4, VDE 0670 part 40Z and with IEC 60282-1 (2005)

### Features

- DIN dimensioned for retrofitting in existing hardware
- Open fuse indicator for ease in troubleshooting
- Designed for use in IEC equipment

### Typical applications

- Medium voltage IEC designed equipment

### Recommended fuseclips

- Catalog numbers 270303, A3354745, see page 7-36.

### Dimensions — in (mm)

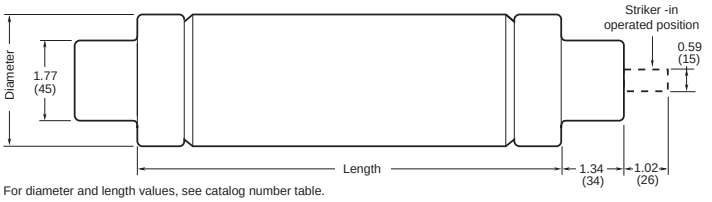


For diameter and length values, see catalog number table.

| kV | Catalog symbol | Amps | Dimensions — in (mm) Diameter | Dimensions — in (mm) Length | IR RMS Sym. (kA) |
|---|---|---|---|---|---|
| 3.6 | 3.6ADOSJ | 6.3, 10, 16, 20, 25, 31.5, 40 | 2.0 (51) | 7.6 (192) | 40 |
| | 3.6WDOSJ | 50, 63, 80, 100, 125 | | | 50 |
| | 3.6WFOSJ | 160, 200 | 3.0 (76) | | |
| | 3.6ADLSJ | 25, 40 | 2.0 (51) | 11.5 (292) | |
| | 3.6WKLSJ | 250, 315, 400 | 3.0 (76) | | |
| 7.2 | 7.2TDLSJ | 6.3, 10, 16, 20, 25, 31.5, 40, 50, 63 | 2.0 (51) | | 40 |
| | 7.2TFLSJ | 80, 100, 125, 160 | 3.0 (76) | | |
| 12 | 12TDLEJ | 6.3, 10, 16, 20, 25, 31.5, 40, 50, 63 | 2.0 (51) | 11.5 (292) | 63 |
| | 12THLEJ | 80, 100 | 2.5 (64) | | |
| | 12TKLEJ | 125 | 3.0 (76) | | |
| | 12TXLEJ* | 160, 200 | 3.5 (88) | | |
| 17.5 | 17.5TDLSJ* | 6.3, 10, 16, 20, 25, 31.5, 40 | 2.0 (51) | | 35.5 |
| | 17.5TFLSJ* | 50 | 3.0 (76) | | |
| | 17.5TDMEJ | 6.3, 10, 16, 20, 25, 31.5, 40, 50, 63 | 2.0 (51) | 17.4 (442) | 50 |
| | 17.5THMEJ | 80, 100 | 2.5 (64) | | |
| | 17.5TKMEJ | 125 | 3.0 (76) | | |
| 24 | 24TDMEJ | 6.3, 10, 16, 20, 25, 31.5, 40, 50 | 2.0 (51) | | 50 |
| | 24THMEJ | 63 | 2.5 (64) | | |
| | 24TFMEJ | 80, 100*[1] | 3.0 (76) | | |
| | 24TXMEJ* | 125[2], 160 | 3.5 (88) | | 31.5 |
| 36 | 36TDQSJ | 3.15[3], 6.3, 10, 16, 20, 25 | 2.0 (51) | 21.2 (537) | 35.5 |
| | 36TFQSJ | 31.5, 40, 50 | 3.0 (76) | | |
| | 36TXQEJ* | 63 | 3.5 (88) | | 20 |

* Not compliant with VDE 0670, part 402.
1 IR RMS Sym. is 63 kA
2 IR RMS Sym. is 40 kA
3 IR RMS Sym. is 20 kA

### Catalog number build-a-code

Fuse catalog symbol Amps

_ _ _ _ _ - _ _ _

E.g., 17.5THMEJ-80 (17.5 kV 80 amp fuse)

## Expulsion fuse links for use in high voltage distribution cut-outs

Expulsion fuse links available in a wide range of options from 15 to 72 kV in ANSI Type T and K characteristics. Expulsion fuse link current ratings should be selected on the basis of maximum expected transient no-damage currents rather than on full load current. In addition, the selection of higher current ratings will reduce the possibility of supply interruption due to transient surges such as those due to lightning strikes.

Links should be handled with a reasonable degree of care when installing. Excessively rough handling may damage the element.

It is normal, under certain fault conditions, for arc extinguishing material and/or metal particles to be expelled from the fuse assembly. It is therefore recommended that reasonable precautions be taken to prevent the installation being approached by unauthorized persons.

When ordering, select from the table below the characteristics in each column you need your fuse link to have.

Example: 15TB30 is a 15 kV, ANSI C 37-42 compliant fuse with a fixed button head terminal that is rated for 30 amps.

The fuse link assembly for a given range is standard to all rated voltages. The exception is the tail length that's varied to suit the expulsion carrier dimensions of different ratings.

### Ratings*

- Volts 15-72 kV
- Amps 1-100 A
- Interrupting rating 8 kA approximate

* See catalog number configuring table for possible volt/amp combinations.

### Agency information

- Type T, complies with ANSI C37-42
- Type K, complies with ANSI C37-42

### Features

- Wide range of options available from 15 kV to 72 kV in ANSI T and K characteristics.
- Extra rapid option also available.

### Typical applications

- Primary side transformer protection
- Feeder protection
- Capacitor bank protection

### Fuse label color coding

| Type | Color | Type | Color |
|---|---|---|---|
| XA | Pink | T | Green |
| K | Yellow | S | — |

### Dimensions — mm (in)

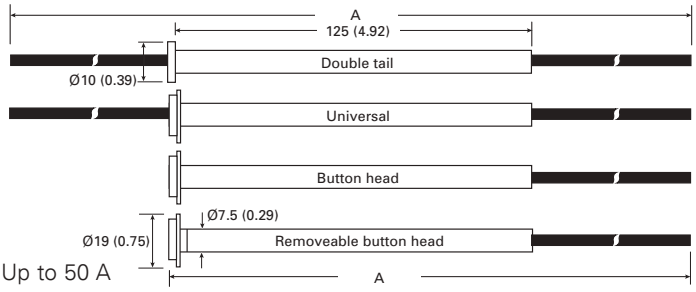


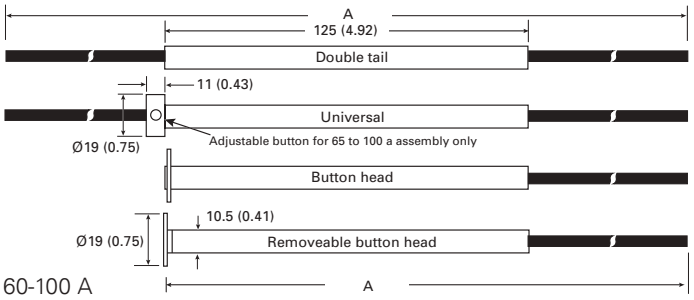


| Link kV | A | Link kV | A |
|---|---|---|---|
| 15 | 533 (21) | 46 | 787 (31) |
| 25 | 660 (26) | 72 | 1016 (40 |

Notes: Type BR is similar to button head shown, except that the button head is attached via a 1/4" UNF thread. Tails can be cut to desired length.

**Catalog number configuration table**

| Available voltage ratings (kV) | 1st letter = current characteristics type | 2nd letter = termination type | Available amps ratings |
|---|---|---|---|
| 15, 25, 46, 72 | **T** = complies with ANSI C 37-42 requirements for slow acting T characteristics | **B** = a fixed NEMA button head link | 1, 2, 3, 4, 5, 6, 7.5, 8, 10, 12, 15, 20, 25, 30, 40, 50, 60, 65, 75, 80, 100 |
| | **K** = complies with ANSI C 37-42 requirements for fast acting K characteristics | **U** = a universal link, with double tail and slip off NEMA button head | |
| | **XA** = this type of expulsion fuse link has an extra rapid characteristic. It is suitable for applications where a high degree of system protection is required at the expense of discrimination. | **D** = double tailed link without NEMA button head | |
| | **S** = Solid links rated at 100 amps are also available in both button head and universal versions for fitting into expulsion fuse carriers where required. These can be ordered in a similar way using the abbreviation S, e.g. 15SB, etc. | **BR** = as pattern B but the button head is attached via a 1/4" UNF thread to allow use of an extension rod | |

## FL — Type H, and EEI-NEMA Type K and T fuses

Medium voltage fuses: Type H (high surge), EEI-NEMA Type K (fast-acting), EEI-NEMA Type T (time-delay).

High-surge, Type H fuses are manufactured in ratings of 1, 2, 3, 5, and 8 amps and were developed for primary fusing of small-sized transformers. Type H links are manufactured in the universal button head design.

Type N fuses conform to previous NEMA standards and are superseded by Type K and T links. Type N fuses are manufactured in the universal button design in ratings of 5 through 200 amps for use in standard NEMA dimensioned cutouts rated through 27 kV.

### Ratings*

- Volts rated to 27 kV
- Amps 1-200 A

* See catalog number table for type and amp combinations.

### Features

- Wide range of EEI-NEMA type fuse links for use in open fuse cutouts
- Voltage rating up to 27 kV for flexible application
- Can be coordinated with other overcurrent protective devices for sectionalizing to isolate feeder branches

### Typical applications

- Medium voltage fused cutouts

### Type K universal silver-element cutout fuses rated to 27 kV

| Catalog no. | |
|---|---|
| **Fast-acting EEI-NEMA Type K** | **Amps** |
| **Non-removable button-head for standard open or enclosed cutouts** | |
| FL12K8 | 8 |
| FL12K10 | 10 |
| FL12K12 | 12 |
| FL12K15 | 15 |
| FL12K25 | 25 |
| FL12K50 | 50 |

### Type H (high-surge), K and T universal tin element cutout fuses rated to 27 kV

| Catalog no. | | | |
|---|---|---|---|
| | EEI-NEMA | | |
| **Type H high surge** | **Type K fast-acting** | **Type T time-delay** | **Amps** |
| **Non-removable button-head for standard open or enclosed cutouts** | | | |
| FL11H1 | FL11K1 | FL11T1 | 1 |
| FL11H2 | FL11K2 | FL11T2 | 2 |
| FL11H3 | FL11K3 | FL11T3 | 3 |
| FL11H5 | FL11K5 | FL11T5 | 5 |
| — | FL11K6 | FL11T6 | 6 |
| FL11H8 | FL11K8 | FL11T8 | 8 |
| — | FL11K10 | FL11T10 | 10 |
| — | FL11K12 | FL11T12 | 12 |
| — | FL11K15 | FL11T15 | 15 |
| — | FL11K20 | FL11T20 | 20 |
| — | FL11K25 | FL11T25 | 25 |
| — | FL11K30 | FL11T30 | 30 |
| — | FL11K40 | FL11T40 | 40 |
| — | FL11K50 | FL11T50 | 50 |
| — | FL11K65 | FL11T65 | 65 |
| — | FL11K80 | FL11T80 | 80 |
| — | FL11K100 | FL11T100 | 100 |
| — | FL11K140 | FL11T140 | 140 |
| — | FL11K200 | FL11T200 | 200 |
| **Removable button-head for cutouts requiring removable-button links*** | | | |
| — | FL3K1 | FL3T1 | 1 |
| — | FL3K2 | FL3T2 | 2 |
| — | FL3K3 | FL3T3 | 3 |
| — | FL3K5 | FL3T5 | 5 |
| — | FL3K6 | FL3T6 | 6 |
| — | FL3K8 | FL3T8 | 8 |
| — | FL3K10 | FL3T10 | 10 |
| — | FL3K12 | FL3T12 | 12 |
| — | FL3K15 | FL3T15 | 15 |
| — | FL3K20 | FL3T20 | 20 |
| — | FL3K25 | FL3T25 | 25 |
| — | FL3K30 | FL3T30 | 30 |
| — | FL3K40 | FL3T40 | 40 |
| — | FL3K50 | FL3T50 | 50 |
| — | FL3K65 | FL3T65 | 65 |
| — | FL3K80 | FL3T80 | 80 |
| — | FL3K100 | FL3T100 | 100 |
| — | FL3K140 | FL3T140 | 140 |
| — | FL3K200 | FL3T200 | 200 |

* Adapter-type removable-button links with ferrule adapter to convert to double-leader links are available in K and T types. Order by description.

## PT fuse mountings — in (mm)

| Catalog no. | Hole ctrs. A | Hole ctrs. B | Overall length C | Hole Inset D | Hole ctrs. E | Contact hgt. F | Overall hgt. G | BIL (kV) |
|---|---|---|---|---|---|---|---|---|
| **5.5 kV Disconnect†** | | | | | | | | |
| 5CLPT-GDM-A | 9.37 (238) | 6 (152.4) | 18.63 (473.2) | 0.75 (19) | 1.75 (44.4) | 4.5 (114.3) | 9.56 (242.8) | 60 |
| 5CLPT-PDM-A | | | | | | | | |
| **5.5 kV Non-disconnect** | | | | | | | | |
| 5CLPT-GNM-A | 9.37 (238) | 6 (152.4) | 18.63 (473.2) | 0.75 (19) | 1.75 (44.4) | 4.5 (114.3) | 6.94 (176.2) | 60 |
| 5CLPT-PNM-A | | | | | | | | |
| **8.3 kV Disconnect†** | | | | | | | | |
| 8CLPT-GDM-A | 9.37 (238) | 6 (152.4) | 18.63 (473.2) | 0.75 (19) | 1.75 (44.4) | 7 (177.8) | 12.06 (306.3) | 75 |
| 8CLPT-GDM-B | | | | | | | | |
| 8CLPT-PDM-A | | | | | | | | |
| 8CLPT-PDM-B | 12.74 (323.6) | | 22 (558.8) | | | | | |
| **8.3 kV Non-disconnect** | | | | | | | | |
| 8CLPT-GNM-A | 9.37 (238) | 6 (152.4) | 18.63 (473.2) | 0.75 (19) | 1.75 (44.4) | 7 (177.8) | 9.44 (239.8) | 75 |
| 8CLPT-PNM-A | | | | | | | | |
| 8CLPT-GNM-B | 12.75 (323.8) | | 22 (558.8) | | | | | |
| 8CLPT-PNM-B | | | | | | | | |
| **15.5 kV Disconnect†** | | | | | | | | |
| 15CLPT-GDM-A | 12.74 (323.6) | 6 (152.4) | 22 (558.8) | 0.75 (19) | 1.75 (44.4) | 7 (177.8) | 12.06 (306.3) | 95 |
| 15CLPT-PDM-A | | | | | | | | |
| 15CLPT-GDM-B | 17.46 (443.5) | | 26.63 (676.4) | | | | | |
| 15CLPT-PDM-B | | | | | | | | |
| **15.5 kV Non-disconnect** | | | | | | | | |
| 15CLPT-GNM-A | 12.74 (323.6) | 6 (152.4) | 22 (558.8) | 0.75 (19) | 1.75 (44.4) | 7 (177.8) | 9.44 (239.8) | 95 |
| 15CLPT-PNM-A | | | | | | | | |
| 15CLPT-GNM-B | 17.46 (443.5) | | 26.63 (676.4) | | | | | |
| 15CLPT-PNM-B | | | | | | | | |
| **25.5 kV Disconnect†** | | | | | | | | |
| 25CLPT-PDM-A | 19.12 (485.6) | 7 (177.8) | 26.63 (676.4) | 0.75 (19) | 1.75 (44.4) | 12 (304.8) | 17.06 (433.3) | 150 |
| **25.5 kV Non-disconnect** | | | | | | | | |
| 25CLPT-PNM-A | 26.63 (676.4) | 7 (177.8) | 26.63 (676.4) | 0.75 (19) | 1.75 (44.4) | 12 (304.8) | 14.75 (374.6) | 150 |

† Disconnect mountings provide a means for fuse extraction only. Do not use a disconnect mounting for load switching or fuse removal while energized.

### Disconnect mountings††

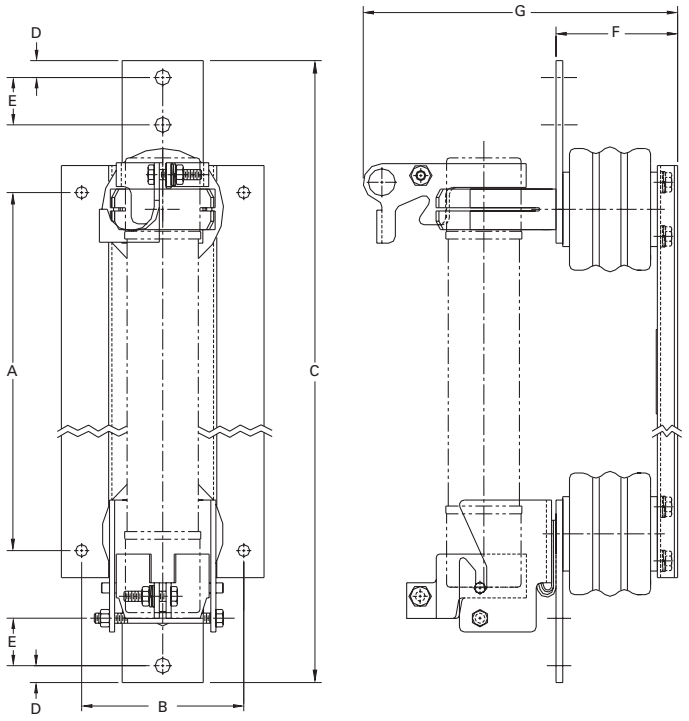


### Non-disconnect mountings

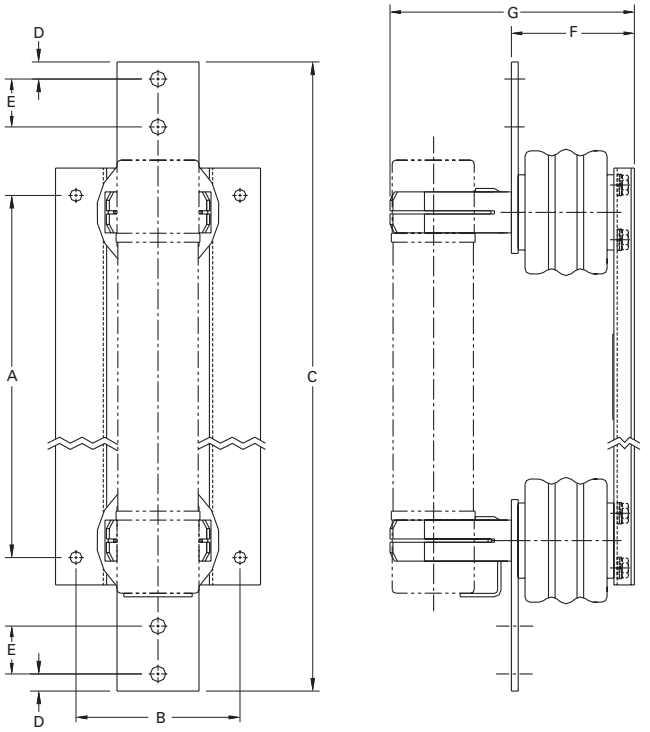

## Recommended fuseclips

| Description | Fuse dia. — in (mm) | Fig. | Clip Dimensions — in (mm) A | B | Ø C | D | E | F | G | Catalog no. |
|---|---|---|---|---|---|---|---|---|---|---|
| DIN clip and stirrup | 1.8 (45) | 1 | — | — | — | — | — | — | — | 270303 |
| Enclosed fuseclip | | 2 | 3.5 (89) | 2.5 (63) | 1.8 (45) | | 4.4 (112) | | | A3354745* |
| Enclosed fuseclip | 2 (51) | 2 | 3.75 (95) | 1.98 (50) | 2.01 (51) | 1.19 (30) | 4.54 (115) | 1.5 (38) | 0.4 (10) | A3354710* |
| Enclosed fuseclip | | 2 | 4.14 (105) | 2.45 (62) | 3.01 (76) | | 5.64 (143) | | | A3354730* |
| Open fuseclip | 3 (76) | 3 | See dimensions drawing | | | | | | | 1A0065 |
| Spring loaded open fuseclip | | 4 | | | | | | | | 9078A67G04 |

* For single barrel applications only. Not sold in pairs.

Figure 1

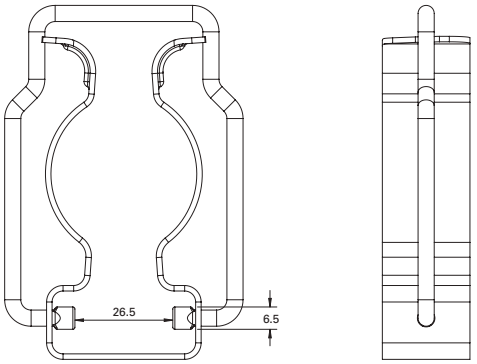


Figure 2

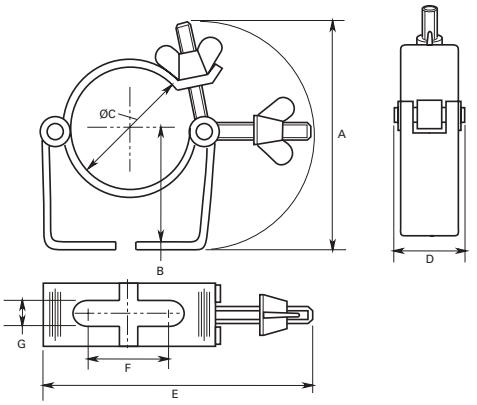


Figure 3

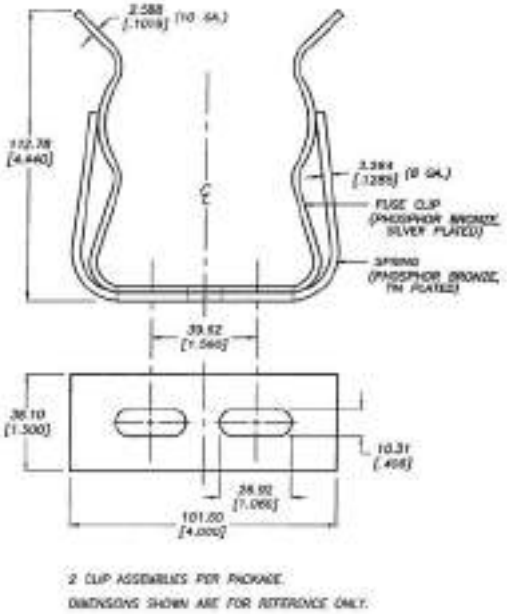


Figure 4

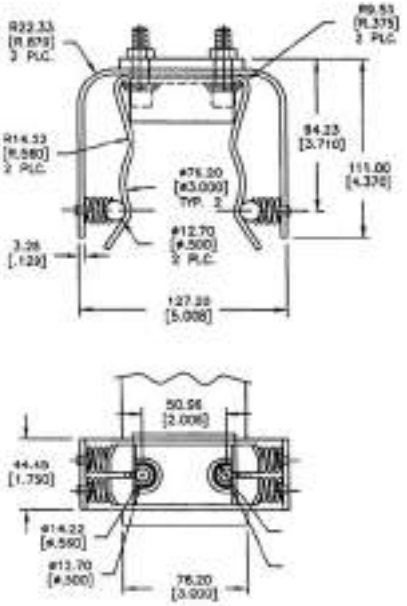

# Save up to 65% panel space with Bussmann series power distribution fuse blocks

## Contents


| Fuse size/ class | Description | Section page |
|---|---|---|
| **Quick guide** | | **2-3** |
| **Control panel applications** | | |
| **1/4" dia.** | | |
| | Panel mount blocks 8000, 3828, 4520, 4393 | 4-5 |
| **Class CC and midget** | | |
| | Modular blocks BCM, BMM | 6-7 |
| | DIN-Rail holders CHCC, CHM, NDNF1, OPM | 8-13 |
| | Panel mount blocks 3743, 4421, 4515 | 14 |
| **Class G** | | |
| | Panel mount blocks BG, G | 15 |
| **14mm dia.** | | |
| | DIN-Rail holder CH14 | 16 |
| **22mm dia.** | | |
| | DIN-Rail holder CH22 | 17 |
| | Modular block JM70100 | 18 |
| | Modular power distribution blocks JM70100_ MW_ | |
| **Class H(K)/R** | | |
| | Modular blocks HM, RM | 19-23 |
| | Modular power distribution blocks HM___MW_, RM___MW_ | 24-27 |
| **Class J** | | |
| | DIN-Rail holders CH30J, CH60J | 28 |
| | Safety J™ JT(N)600 | 29 |
| | Panel mount pyramid block JP | 30 |
| | Modular blocks JM60_ | 31-32 |
| | Modular power distribution blocks JM60___MW_ | 33-34 |
| **Class T** | | |
| | 300 V panel mount blocks T300 | 35-36 |
| | 600 V panel mount blocks T600 | 37-38 |
| **High speed fuses** | | |
| | Open center panel mount blocks BH, C5268, 1BS | 39 |
| **NH fuses** | | |
| | DIN-Rail/panel mount blocks SD00, SD1, SD2, SD3, SD4, TD00, TD1, TD2, TD3 | 40 |
| **Through-panel applications** | | |
| **5mm dia.** | HTB | 41 |
| **1/4" dia.** | HJL, HK, HKP, HLD | 42-43 |
| **13/32" dia.** | HPC, HPC-D, HPD, HPF, HPG, HPM, HPS, HPS2 | 43-45 |
| **In-line applications** | | |
| **5mm dia.** | HHT | 46 |
| **1/4" dia.** | HFA, HFB, HEB-10, HHB, HR/HM, HRK | 46-48 |
| **Class G** | Single-pole HEC, HEG, HEH, HEJ non-breakaway | 49 |
| **13/32" dia.** | HEB single-pole breakaway and non-breakaway | 51-52 |
| **Class CC** | HEZ waterproof single-pole breakaway and non-breakaway | 52 |
| **13/32" dia.** | HEX, Class CC HEY dual-pole breakaway and non-breakaway | 53-54 |

## Quick guide

These tables list various fuse classes, sizes and voltages along with their available blocks and holders. Catalog pages are denoted parenthetically "()" next to their catalog symbol. E.g.: BCM603 (8-6) is in Section 8, page 6.

| Fuse class/ size | Catalog symbol* | Amp range | Fuse blocks** | DIN—Rail holders** | In-line holders** | Panel mount holders** | Open center blocks** |
|---|---|---|---|---|---|---|---|
| Class CC | FNQ-R<br>KTK-R<br>LP-CC | Up to 30 | BCM603 (8-6) | CHCC (8-8)<br>OPM-NG (8-13)<br>OPM-1038 (8-12) | HEY (8-53)<br>HEZ (8-52) | HPF-RR (8-43)<br>HPS-RR (8-45) | — |
| Class G | SC | 1/2-15 | BG301 (8-15) | — | HEG (8-49) | HPG-EE (8-44)<br>HPS-EE (8-45) | — |
| | | 20 | BG302 (8-15) | | HEH (8-49) | HPS-JJ (8-45) | |
| | | 25-30 | BG303 (8-15) | | HEC (8-49) | HPS-FF (8-45) | |
| | | 35-60 | G30060 (8-15) | | HEJ (8-49) | — | |
| Class J | DFJ<br>JKS<br>LPJ | Up to 60 | JM60030 (8-31)<br>JM60030-_MW_, *** (8-33)<br>JP60030-3 (8-30) | CH_J (8-28)<br>JT(N)600_ (8-29) | — | — | — |
| | | 70-400 | JM60100 (8-31)<br>JM60100-_MW_*** (8-33) | — | | | 1BS101 (8-39)<br>BH-0111 (8-39) |
| | | 110-200 | JM60200 (8-31<br>JM60200-_MW_*** (8-33) | | | | — |
| | | 250-400 | JM60400 (8-31)<br>JM60400-_MW_*** (8-33) | | | | BH-3145 (8-39) |
| | | 450-600 | JM60600 (8-31) | | | | BH-3144 (8-39) |
| 250 V<br>Class H/K5 | NON | Up to 60 | HM250__ (8-19)<br>HM250__-_MW_*** (8-24) | CH14 (8-16) | — | — | — |
| | | 70-600 | HM25___ (8-19) | | | | |
| 600 V<br>Class H/K5 | NOS | Up to 60 | HM600__ (8-19)<br>HM600__0-_-MW_*** (8-24) | — | — | — | — |
| | | 70-600 | HM60___ (8-19) | | | | |
| Class L | KLU<br>KRP-C<br>KRP-CL<br>KTU | 601-1200 | 51215 (1-pole)†<br>51235 (3-pole)† | — | — | — | — |
| 250 V<br>Class RK1/RK5 | FRN-R<br>KTN-R<br>KWN-R<br>LPN-RK | Up to 60 | RM250__ (8-21)<br>RM250__0-_MW_*** (8-26) | — | — | — | — |
| | | 70-600 | RM25___ (8-21) | | | | |
| 600 V<br>Class RK1/RK5 | FRS-R<br>KTS-R<br>KWS-R<br>LPS-RK | Up to 60 | RM600__ (8-21)<br>RM600__-_MW_*** (8-26) | — | — | — | — |
| | | 70-600 | RM60___0 (8-21) | | | | |
| 300 V Class T | JJN | Up to 600 | T30___ (8-35) | — | — | — | — |
| | | 250-400 | T30400 (8-35) | | | BH-1133 (8-39) | |
| | | 450-600 | T30600 (8-35) | | | BH-3144 (8-39) | |
| 600 V Class T | JJS | Up to 60 | T600__ (8-37) | — | — | — | — |
| | | 70-100 | T60100 (8-37) | | | BH-0111 (8-39) | |
| | | 110-200 | T60200 (8-37) | | | BH-1132 (8-39) | |
| | | 250-400 | T60400 (8-37) | | | BH-1133 (8-39) | |
| | | 450-600 | T60600 (8-37) | | | BH-3144 (8-39) | |
| Supplemental<br>13/32" x 1-1/2" | BAF<br>FNM<br>FNQ<br>KLM<br>KTK | Up to 30 | BMM603 (8-6)<br>3743 (8-14)<br>4421 (8-14)<br>4515 (8-14) | CHM (8-8)<br>NDNF1-WH (8-11)<br>OPM-1038 (8-12)<br>OPM-NG (8-13) | HEB (8-51)<br>HEX (8-53) | HPC-D (8-43)<br>HPD (8-44)<br>HPF (8-43)<br>HPG (8-44)<br>HPM (8-44)<br>HPM-D (8-44)<br>HPS2 (8-45)<br>HPS (8-45) | — |
| Supplemental<br>13/32" x 1-3/8" | BBS | Up to 30 | BMM603 (8-6)<br>3743 (8-14)<br>4421 (8-14)<br>4515 (8-14) | — | HEH (8-49) | HPS-L (8-45) | — |

| Fuse class/ size | Catalog symbol* | Amp range | Fuse blocks** | DIN—Rail holders** | In-line holders** | Panel mount holders** | Open center blocks** |
|---|---|---|---|---|---|---|---|
| 1/4 x 7/8 | AGW | Up to 30 | — | — | HHB (8-47)<br>HM (8-48)<br>HR (8-48)<br>HRK (8-48) | HJL (8-42) | — |
| 1/4 x 1 | AGX | Up to 30 | 3828 (8-5)<br>4520 (8-5)<br>4393 (8-5) | — | HHB (8-47)<br>HM (8-48)<br>HR (8-48)<br>HRK (8-48) | HJL (8-42) | — |
| 1/4 x 1-1/4 | ABC<br>AGC<br>GBB<br>MDA<br>MDL<br>MDQ | Up to 30 | S-8000 family (8-4) | — | HFA (8-46)<br>HFB (8-47)<br>HHB (8-47)<br>HM (8-48)<br>HR (8-48)<br>HRK (8-48) | HKP (8-42)<br>HTB (8-41)<br>HK (8-42)<br>HLD (8-43) | — |
| 5x15mm | C515<br>C517<br>C518<br>C519<br>C520 | Up to 7 | — | — | HHT (8-46) | — | — |
| 5x20mm | GDA<br>GDB<br>GDC<br>GMA<br>GMC<br>GMD<br>S500<br>S501<br>S505<br>S505H<br>S506 | Up to 15 | — | — | HHT (8-46) | HTB (8-41) | — |

* Refer to data sheets for applicable fuse voltage and interrupting ratings and agency information.
** Fuse blocks and fused switches are available in a variety of pole and terminal configurations, and voltage and withstand ratings (SCCRs).Refer to data sheets for complete catalog numbers.
*** This is a UL Listed power distribution fuse block, combining a fuse block and power distribution block into one unit.
† Not shown in this catalog. Contact customer service for details.

## S-8000 bolt-in and snap-in mount open blocks for 1/4" x 1-1/4" fuses

### Ratings

Volts 300 V

Amps 30 A max*

* See catalog number tables for agency limitations.

### Agency information

- UL Recognized, Guide IZLT2, File E14853, CSA Certified Class 6225-01, File 47235, RoHS compliant, CE

### Single pole anti-rotation pin

- Single-pole blocks may be ordered without the anti-rotational pin. Add an "X" to the number of poles, e.g., BK/S-8000-1X.

| Catalog no.† | Poles | Terminal | Terminal angle | Max amps |
|---|---|---|---|---|
| **Bolt-in mount** | | | | |
| S-8001-(poles)-R | 1-12 | Solder | 0° | UL 30 CSA 21 |
| S-8002-(poles)-R | | | 40° | |
| S-8101-(poles)-R | | 3/16" quick-connect | 0° | UL 20 CSA 13 |
| S-8102-(poles)-R | | | 40° | |
| S-8201-(poles)-R | | 1/4" quick-connect | 0° | UL 30 CSA 16 |
| S-8202-(poles)-R | | | 40° | |
| S-8203-1-R | 1 | Side 1/4" quick-connect | | |
| S-8301-(poles)-R | 1-12 | Screw | — | UL 30 A CSA 25A |
| **Snap-in mount** | | | | |
| S-8001-1-SNP-R | 1 | Solder | 0° | UL 25 CSA 21 |
| S-8002-1-SNP-R | | | 40° | |
| S-8101-1-SNP-R | | 3/16" quick-connect | 0° | UL 20 CSA 13 |
| S-8102-1-SNP-R | | | 40° | |
| S-8201-1-SNP-R | | 1/4" quick-connect | 0° | UL 20 CSA 16 |
| S-8203-1-SNP-R | | | Side | |

† Quantities for regular and bulk (BK/ prefix) catalog numbers varies with the number of poles. Contact customer satisfaction team for details.

### Mounting dimensions — in*

| No. of Poles | A | B |
|---|---|---|
| 1 | — | — |
| 2 | 1-1/8 | 5/8 |
| 3 | 1-3/4 | 1-1/4 |
| 4 | 2-3/8 | 1-7/8 |
| 5 | 3 | 2-1/2 |
| 6 | 3-5/8 | 3-1/8 |
| 7 | 4-1/4 | 3-3/4 |
| 8 | 4-7/8 | 4-3/8 |
| 9 | 5-1/2 | 5 |
| 10 | 6-1/8 | 5-5/8 |
| 11 | 6-3/4 | 6-1/4 |
| 12 | 7-3/8 | 6-7/8 |

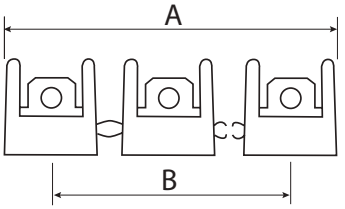

* Block length varies by specific termination and mounting. See data sheet 2101 for details.

**Data sheet no. 2101**

## 3828 open blocks with solder terminals for 1/4" x 1" fuses

### 3828

### Ratings

- Volts 250 V
- Amps 30 A

| Catalog no. | Poles | Base width — in (mm) |
|---|---|---|
| 3828-1 | 1 | 1/2 (12.7) |
| 3828-2 | 2 | 1-1/8 (28.6) |
| 3828-3 | 3 | 1-3/4 (44.5) |
| 3828-4 | 4 | 2-3/8 (60.3) |
| 3828-5 | 5 | 3 (76.2) |
| 3828-6 | 6 | 3 5/8 (92.1) |
| 3828-7 | 7 | 4-1/4 (108.0) |
| 3828-8 | 8 | 4-7/8 (123.8) |
| 3828-10 | 10 | 6-1/8 (155.6) |
| 3828-12 | 12 | 7-3/8 (187.3) |

### Dimensions — in**

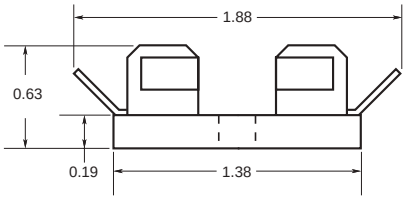


**Mounting screw hole diameter is 0.147." Max #6 mounting screw.

## 4520 and 4393 open blocks with solder terminals for 1/4" x 1" fuses

### Ratings

- Volts 250 V
- Amps 30 A

| Catalog no. | Description |
|---|---|
| 4520 | Integral clip and straight solder terminals |
| 4393 | Spare fuse block - no terminals |

### Dimensions — in*

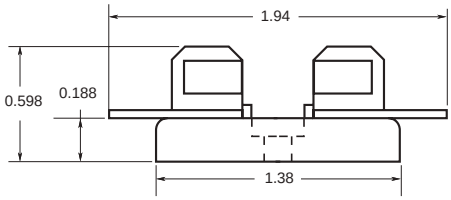


4520 integral clip and straight solder terminals

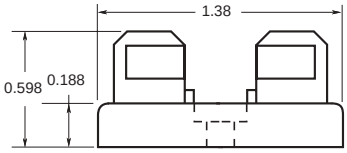


4393 spare fuse block, no terminals

* Mounting screw hole diameter is 0.147". Counterbore 0.636" diameter. Max #6 mounting screw.

## BCM (Class CC) and BMM (supplemental 13/32 x 1-1/2″ /10x38mm) modular style fuse blocks with optional covers.

RoHS 2011/65/EU

The BCM and BMM modular fuse blocks contain features that add versatility, reduce labor and enhance safety of any panel design. Optional IP20 finger-safe covers enhance safety with a lockout/tagout feature along with optional open fuse indication to speed troubleshooting.

BMM603-3C with CVRI-CCM covers and TM26CB marker labels

BCM603-3PQ with pressure plate and 1/4" quick-connect terminals

### Ratings

- Volts 600 V
- Amps 30 A
- SCCR 200 kA RMS Sym.

### Agency information

- Class CC BCM blocks
  - UL Listed E14853 - IZLT
  - CSA Certified 47235-6225-01
  - RoHS Compliant
- 13/32″ x 1-1/2″ BMM blocks
  - UL Recognized, E14853 - IZLT2
  - CSA Certified 47235-6225-01
- CE
- RoHS compliant

### Covers*

- Covers are included in the overall UL Listing/Recognition and CSA Certification

* Covers sold separately in multiples of three units. Order one unit per pole.

### Poles

- 1-, 2-, 3-pole units factory assembled
- Single-pole units snap together to create desired number of poles

### Flammability ratings

- Blocks UL 94V0, self-extinguishing
- Covers UL 94HB, self-extinguishing

### Operating and storage temperature range

- Blocks -40°C to +120°C
- Non indicating covers -40°C to +120°C
- Indicating covers -20°C to +90°C**

**Indication requires minimum 90 V and closed circuit to illuminate.

### Cover catalog numbers

- For blocks with quick-connect terminals — CVR(I)-CCM-QC
- All other terminal options — CVR(I)-CCM

### Data sheet no. 10241

### Marker labels

- Order Bussmann series catalog number TM26CB

### Recommended Bussmann series fuses

- Class CC: LP-CC, FNQ-R, KTK-R
- UL 13/32" x 1-1/2": KTK, FNQ, KLM, FNM, BAF
- IEC 10x38mm: C10G, C10M, FWA, FWC

### Recommended DIN-Rail end stops

- Catalog no. BRKT-ND
- Catalog no. BRKT-NDSCRW2

### Features

- Available in 1-, 2- and 3-pole configurations to meet stocking requirements
- Blocks are fully modular with a snap-together design that provides toolless assembly of multiple pole blocks at point-of-use to reduce inventory and save assembly time and labor
- DIN-Rail and panel mount versatility allows one product to be used for multiple applications, lowering inventory cost
- Compact footprint consumes minimal panel space
- Optional see-through cover enhances safety with IP20 finger-safe protection, lockout/tagout capability and open circuit indication
- Easy circuit identification with available universal marker labels for fuse block covers
- Tin-plated bimetallic copper fuse clips deliver superior fatigue resistance compared to traditional spring brass
- Terminal options to meet application needs including 1/4″ spade quick-connect terminals for faster panel assembly

### Terminals for 75/90°C Cu and AL wire

| Terminal type | AWG range | AWG | Torque lb-in (N•m) |
|---|---|---|---|
| Box lug (C) | Cu 2-14<br>Al 2-8 | Cu 2-3 | 50 (5.6) |
| | | Cu 4-6 | 45 (5.1) |
| | | Cu 8-14 | 35 (4.0) |
| | | Al 2-6 | 50 (5.6) |
| | | Al 8 | 40 (4.5) |
| Screw (S) | Cu 10-18 | 10-18 | 20 (2.3) |
| Screw/quick-connect* (SQ) | | | |
| Pressure plate (P) | | | |
| Pressure plate/quick-connect* (PQ) | | | |

* ¼″ quick-connect terminal maximum amps dependent on female spade connector and wire ratings.

### Recommended covers†

| | Cover catalog no. | |
|---|---|---|
| Terminal type | Indicating | Non indicating |
| Box lug (C) | CVRI-CCM | CVR-CCM |
| Screw (S) | CVRI-CCM | CVR-CCM |
| Screw/quick-connect (SQ) | CVRI-CCM-QC | CVR-CCM-QC |
| Pressure plate (P) | CVRI-CCM | CVR-CCM |
| Pressure plate/quick-connect (PQ) | CVRI-CCM-QC | CVR-CCM-QC |

† For use with 4 AWG max conductors.

| Catalog no. | | | | | | |
|---|---|---|---|---|---|---|
| Terminal type | | | | | | |
| 10-32 Phil-slot screw | Screw with quick-connect* | Pressure plate | Pressure plate with quick-connect* | Box lug | Poles | Fuse/class |
| BCM603-1S | BCM603-1SQ | BCM603-1P | BCM603-1PQ | BCM603-1C | 1 | CC |
| BCM603-2S | BCM603-2SQ | BCM603-2P | BCM603-2PQ | BCM603-2C | 2 | CC |
| BCM603-3S | BCM603-3SQ | BCM603-3P | BCM603-3PQ | BCM603-3C | 3 | CC |
| — | BMM603-1SQ | — | BMM603-1PQ | BMM603-1C | 1 | 10x38 (13/32"x1-1/2") |
| — | BMM603-2SQ | — | BMM603-2PQ | BMM603-2C | 2 | 10x38 (13/32"x1-1/2") |
| — | BMM603-3SQ | — | BMM603-3PQ | BMM603-3C | 3 | 10x38 (13/32"x1-1/2") |
| — | BCCMM603-3SQ | — | BCCMM603-3PQ | — | 3 | 3-Pole control circuit transformer block 2-pole CC with 1-pole 10x38mm (13/32" x 1-1/2") |

* 1/4" quick-connect terminal maximum amps dependent on female spade connector and wire ratings.

**Dimensions — mm (in)**

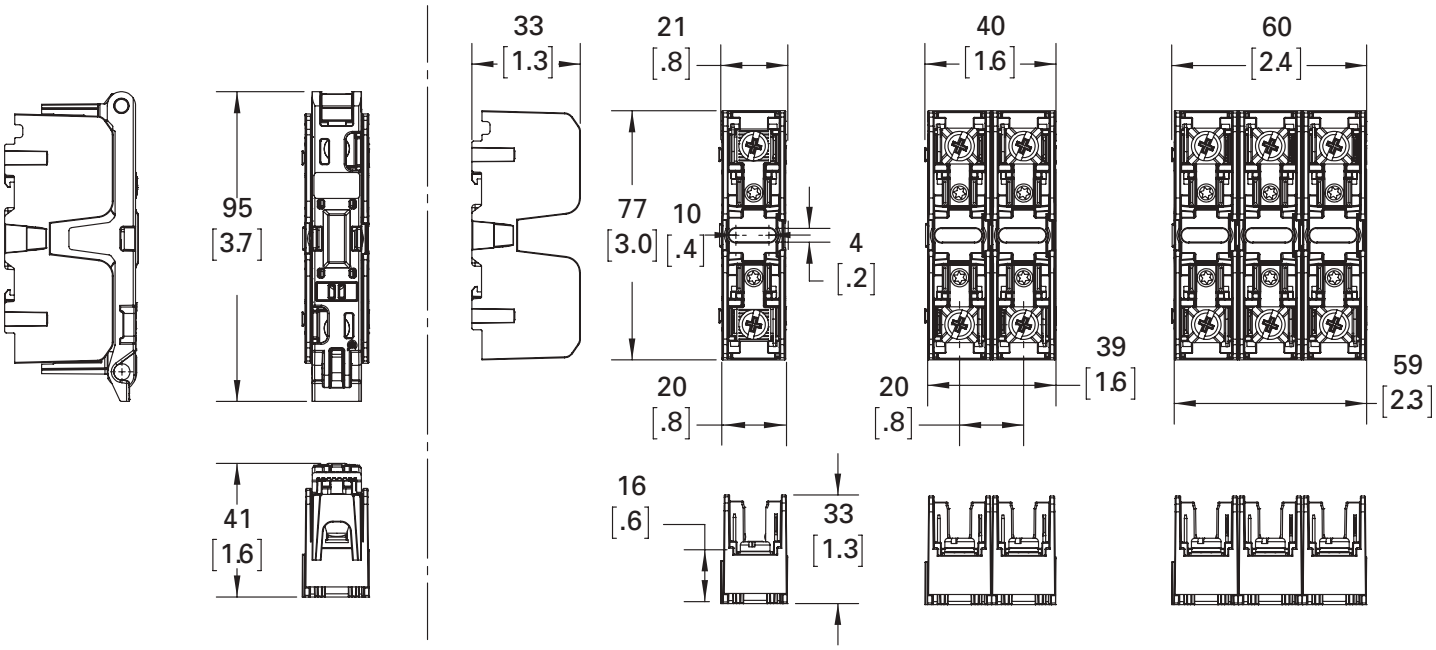

## CH modular, IP20 finger-safe DIN-Rail holders for Class CC, midget and PV fuses

RoHS 2011/65/EU

Bussmann series CH DIN-Rail fuse holders are for UL Class CC and midget fuses, and IEC 10x38mm fuses. They are available with and without indication in 1-, 2- and 3-pole IP20 finger-safe versions. A variety of accessories extends their application flexibility and they may be ganged together to meet specific application requirements.

### Ratings

- Volts
  - 600 V (or less) UL
  - 690 V (or less) IEC
  - 1000 Vdc (or less) photovoltaic (PV)
- Amps
  - 30 A UL
  - 32 A IEC
- SCCR
  - 33 kA photovoltaic
  - 200 kA RMS Sym. (CHCC, CHM*)

* CHM SCCR is fuse interrupting rating dependent.

### Agency information

- CHCC, CHM; UL Listed Guide IZLT, Recognized Guide IZLT2, File E14853
- CHPV, UL Listed to 4248-19, Guide IZMR, File E348242
- CSA File 47235, CHPV and CHM - Class 6225-30, CHCC - Class 6225-01
- IEC 60269-2 (CHM, CHPV)
- CCC
- RoHS compliant
- CE

### Mounting: 35mm DIN-Rail

### Wire range

- 75°C and 90°C Cu
- 18-4 AWG (0.8-21.1mm$^2$)
- Solid, stranded and fine stranded*

* See data sheet 10430 for application details.

### Terminals

- Single or dual conductors
- Comb busbar
- Terminal screws
  - Standard phil-slot
  - Optional hex head (order by adding "-H" suffix to the catalog number, e.g., CHM1DU-H)

### Torque

- 30 lb-in (3.4 N•m) maximum

### Data sheet no. 10430

### Flammability

- UL 94V0, self-extinguishing

### Storage and operating temperature

- -4°F (-20°C) to +194°F (90°C) indicating
- -4°F (-20°C) to +248°F (120°C) non-indicating

### Features

- High SCCR rated, UL Listed Class CC holder with optional open fuse indication for 600 V and 48 Vdc (see catalog number table for details)
- Enhanced safety with IP20 finger-safe construction
- UL Recognized midget and IEC 10x38mm holders with factory assembled neutral pole option
- Agency ratings up to 1000 Vdc for use with PV fuses.
- Available remote PLC fuse indication module
- Wiring flexibility with terminals rated for use with 75°C or 90°C solid, stranded and fine stranded wire, and fork terminals and comb busbars. (Use any higher temperature insulations at the 90°C ampacity with appropriate derating.)
- Complete range of UL Listed and high SCCR rated one- and three-phase finger-safe comb busbars and power feed lugs
- Optional hex head terminal screw makes it easier to achieve necessary torque values

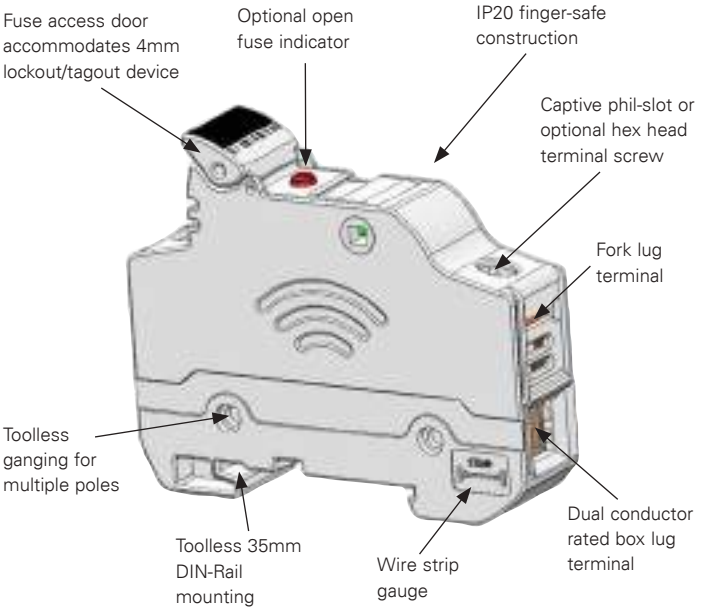


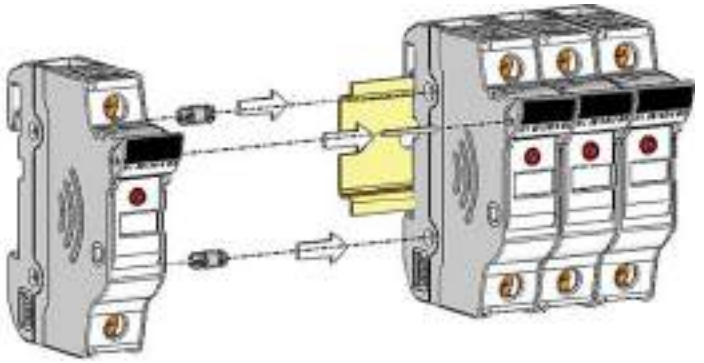

Gang multiple poles to meet application requirements using kit catalog number JV-L (gangs up to four poles).

## UL midget and IEC 10x38

| Catalog no.† | | Volts and amps | | | | | |
|---|---|---|---|---|---|---|---|
| With indication* | Without indication | UL | IEC | Agency marks | Poles | SCCR | Recommended Bussmann series fuses |
| CHM1DIU | CHM1DU | 600 V/ 30 A | 690 V/ 32 A | UR, CSA, IEC 60269-2, CCC | 1 | 200 kA RMS Sym.†† | BAF, BAN, FNM, FNQ, FWA, FWC, KLM, KTK, AGU, C10G_, C10M_ |
| CHM2DIU | CHM2DU | | | | 2 | | |
| CHM3DIU | CHM3DU | | | | 3 | | |
| CHM4DIU | CHM4DU | | | | 4 | | |
| CHM1DNIU | CHM1DNU | | | IEC 60269-2 | 1 + neutral | | |
| CHM3DNIU | CHM3DNU | | | | 3 + neutral | | |
| CHM1DI-48U | — | 48 Vdc/ 30 A | 48 Vdc/ 32 A | UR, CSA, IEC 60269-2, CCC | 1 | | |
| — | CHM1DNXU | — | 690 V/ 32 A | IEC 60269-2 | | N/A | N/A |
| CHM1DCIU | CHM1DCU | 600 Vac, 1000 Vdc, 30 A | 690 V, 32 A | UR, CSA, IEC 60269-2 | 1 | 200 kA RMS Sym.†† 33 kA DC | 600/690 V BAF, BAN, FNM, FNQ, FWA, FWC, KLM, KTK, AGU, C10G_, C10M_, 1000 Vdc PV-(amp)A10F, PV10M-(amp) |
| CHM2DCIU | CHM2DCU | | | | 2 | | |
| CHM3DCIU | CHM3DCU | | | | 3 | | |
| CHM4DCIU | CHM4DCU | | | | 4 | | |

## UL Class CC

| Catalog no. † | | | | | | |
|---|---|---|---|---|---|---|
| With indication* | Without indication | Volts / amps | Agency marks | Poles | SCCR | Recommended Bussmann series fuses |
| CHCC1DIU | CHCC1DU | 600 V/30 A | UL, CSA, CCC | 1 | 200 kA RMS Sym. | LP-CC, FNQ-R, KTK-R |
| CHCC2DIU | CHCC2DU | | | 2 | | |
| CHCC3DIU | CHCC3DU | | | 3 | | |
| CHCC1DI-48U | — | 48 Vdc/30 A | | 1 | 33 kA DC | |

## UL and IEC photovoltaic

| Catalog no. † | | | | | | |
|---|---|---|---|---|---|---|
| With indication* | Without indication | Volts / amps | Agency marks | Poles | SCCR | Recommended Bussmann series fuses |
| CHPV1IU | CHPV1U | 1000 Vdc/30 A | UL, CSA, , UL 4248-18, IEC 60269-1, CCC | 1 | 33 kA DC | PV-(amp)A10F, PV10M-(amp) |
| CHPV2IU | CHPV2U | | | 2 | | |

† Available with optional hex head terminal screws. To order, add "-H" suffix to the desired catalog number.
††SCCR is limited to the interrupting rating of the installed fuse or 200 kA, which ever is less.
* All models require 90 V minimum for illumination, except CHM1DI-48U that requires 15 V minimum.

### Dimensions — mm (in)

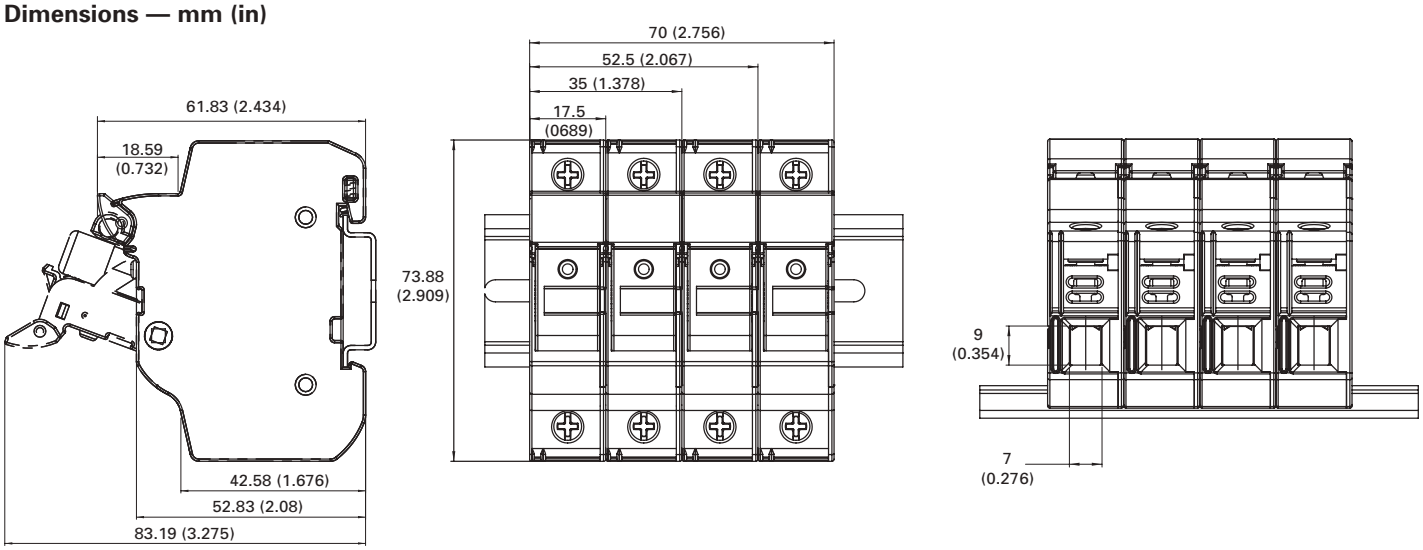


Data sheet no. 10430

## Accessories

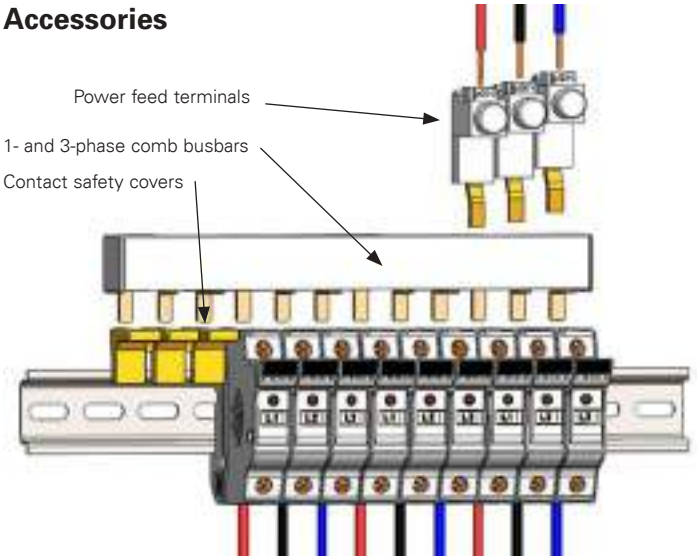


### Comb busbars

- Easily distribute power in single-or three-phase systems
- Flexible cut-to-length busbars do not compromise the finger-safe protection (requires using endcaps)
- 100 kA SCCR when protected by a max 200 A Class J fuse
- Single-phase busbars rated to 1000 Vdc and 100 A
- Three-phase busbars rated to 600 V and 100 A
- Power feed terminals for single-and three-phase systems

### Agency information

- UL 508, File E195399

### Pitch 17.8mm

Ratings

- Volts
  - 600 V max. (three-phase)
  - 1000 Vdc/600 Vac max. (single-phase)
- Amps 100 A max.
- SCCR
  - 10 kA (default)
  - 100 kA (with upstream Class J max 200 A fuses)

| Catalog no. | Phase | No. of pins | Endcaps* |
|---|---|---|---|
| BB1P100M3 | Single | 3 | Yes* |
| BB1P100M6 | | 6 | |
| BB1P100M9 | | 9 | |
| BB1P100M12 | | 12 | |
| BB1P100M15 | | 15 | |
| BB1P100M57 | | 57 pin cuttable | No** |
| BB3P100M6 | Three | 6 | Yes* |
| BB3P100M9 | | 9 | |
| BB3P100M12 | | 12 | |
| BB3P100M15 | | 15 | |
| BB3P100M57 | | 57 pin cuttable | No** |

* With endcaps assembled. If cut to length, order additional endcaps separately.
**Order end caps separately, ECAP1P for single-phase busbars and ECAPMP for three-phase busbars.

### Data sheet no. 10430

### Power feed terminals

PWR1PLP — Single-phase, low profile power feed terminal

Ratings

- Volts 1000 V
- Amps 115 A
- Wire range 1/0-10 AWG Cu, max torque 50 lb-in (5.6 N•m)
- Wire rating 60°C†

PWR35MM — 35mm² three-phase power feed terminal for three-phase busbars

Ratings

- Volts 1000 V
- Amps 115 A
- Wire range 1/0-10 AWG Cu, max torque 50 lb-in (5.6 N•m)
- Wire rating 60°C†

PWR50MM — 50mm² direct feed power terminal

Ratings

- Volts 1000 V
- Amps 115 A
- Wire range 1-14 AWG Cu, max torque 35 lb-in (3.9 N•m)
- Wire rating 75°C†

† Higher temperature rated wire may be used with appropriate derating.

### Comb busbar safety covers and end caps

FSCVR

Spare comb busbar pin safety protection covers (used to cover exposed pins on comb busbars). Sold in quantity of ten strips of five covers each. (FSCVR comes with five covers on a strip. Minimum order is 10 strips or 50 safety covers total.)

ECAP1P

End cap for single-phase comb busbars. Sold in quantity of fifty.

ECAPMP

End cap for three-phase comb busbars. Sold in quantity of fifty.

### Accessory catalog numbers

| Catalog no. | Description | Carton quantity |
|---|---|---|
| PWR1PLP | Single-phase low-profile power feed terminal (115 A, 1000 V) | 10 |
| PWR35MM | 35mm² power feed terminal for three-phase busbar (115 A, 1000 V) | 10 |
| PWR50MM | 50mm² direct power feed terminal (1000 V) | 10 |
| ECAP1P | Single-phase busbar endcap | 50 |
| ECAPMP | Three-phase comb busbar end cap | 50 |
| FSCVR | Spare comb busbar pin safety protection covers | 10 strips of five covers each, total 50 individual covers |

## PLC fuse monitor

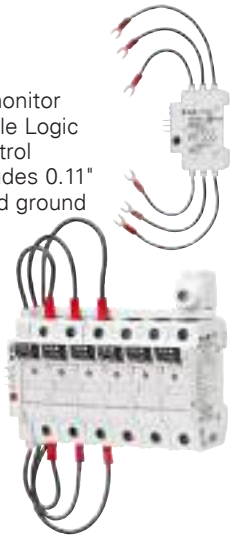

### Catalog no. CH-PLC2

The Bussmann series resettable PLC fuse monitor permits easy integration with a Programmable Logic Controller (PLC) or other monitoring and control equipment. Signals up to three-phases. Includes 0.11" (2.8mm) quick-connects for power, signal and ground connections.

### Ratings

- Signal output to PLC*
  - +24 Vdc, 10 mA max
- Output signals
  - Digital 0 Vdc (low), 24 Vdc max (high)
  - 0 Vdc Low – fuse is good
  - 24 Vdc High – fuse has opened

* When the fuse opens, the output signal is sent high and will remain high until the unit is reset.

### Agency information

- UL 98 Recognized, Guide WHTY2, File E155130
- cURus to Canadian Standard 22.2 No. 4-04

### Emissions and immunity testing

- IEC 60947-1: Voltage Switchgear and Control Gear
- IEC 61000-6-2: Electromagnetic Compatibility (EMC)
  - IEC 61000-4-2: Electrostatic Discharge Immunity - Test at level 3 (6 kV-Contact Discharge) and level 2 (4 kV-Air Discharge)
  - IEC 61000-4-3: Electromagnetic Compatibility - Radiated, Radio-frequency, Electromagnetic Field Immunity test at level x (20 V/m)
  - IEC 61000-4-4: Electromagnetic Compatibility - Testing and Measurement Techniques at level 3 (± 2kV - Power Port and ±1 kV - I/O Ports)
  - IEC 61000-4-5: Electromagnetic Compatibility - Surge Immunity test at level 4 (±4 kV)
  - IEC 61000-4-6: Immunity to Conducted Disturbances at level 3 (10 V)

### Flammability rating UL 94V0

### Local indication

- Two distinct LEDs indicate unit power (green) and open fuse (red). Open fuse LED is resettable upon fuse replacement and the actuating the reset switch

### Wiring

- For power, signal and ground connections use shielded twisted pair 22-24 AWG (0.34-0.25mm$^2$) 300 V rated wire.

### Minimum circuit voltage

- Minimum circuit voltage required across the CH holder is 100 Vac for the remote indication device to operate

### Installation

- Mounts on the left side of the fuse holder and mechanically interlocks with the fuse holder switch handle with hardware provided

### Degree of protection IP20 finger-safe

### Storage and operating temperature

- -4°F (-20°C) to +167°F (+75°C)

### PLC programming

- The CH-PLC-2 signal line is designed to provide a digital input to a PLC I/O card
- Programmable Logic Control program must be written to properly interpret the input signal to the PLC
- The PLC program should check for consecutive high signals before taking action on a critical process

### To order

- Specify catalog number CH-PLC2 (one unit)

**Data sheet no. 10430**

## NDNF1-WH single-pole DIN-Rail mount fuse holding terminal block for 13/32" x 1-1/2" (10x38mm) fuses

**Ratings: 600 volts / 30 amps**

**Wire range 8-22 AWG Cu**

**Torque rating 2.03 N•m (18 lb-in)**

**Mounting 35mm DIN-Rail or C-rail**

**Fuse pullers**

- PF1-WH (white)
- PF1-BK (black)

**Max operating temperature 105°C**

**Circuit jumper catalog no. JF1 for 2 circuits**

## Optima™ fuse holder module and module with disconnect switch

### OPM-1038(R)(C) without switch

### OPM-1038(R)SW(C) with switch

OPM-1038(R)(C) is a 3-pole modular fuse holder 13/32" x 1-1/2" (10x38mm) and Class CC fuses.

OPM-1038(R)SW(C)* is a 3-pole load break modular fuse holder and disconnect switch for 13/32" x 1-1/2" (10x38mm) and Class CC fuses.

Both the OPM-1038(R)SW(C) and OPM-1038(R)(C) are available with optional communications for interfacing with programmable logic controllers.

* Recommend using the UL 98 Listed CCP2 disconnect switch. See page 11-2.

### Ratings

- See catalog numbers table

### Agency information

- See catalog numbers table

### Flammability rating UL 94V0

### OPM-1038(R)SW(C) switch horsepower ratings

| 3-phase volts | 240 | 480 | 600 |
|---|---|---|---|
| HP | 5 | 10 | 15 |

### Recommended Bussmann series fuses

- Class CC; LP-CC, FNQ-R, KTK-R
- UL 13/32" x 1-1/2"; KTK, FNQ, KLM, FNM, BAF
- IEC 10x38mm; C10G, C10M, FWA, FWC

### Physical characteristics

- Small size matches 45mm IEC starter width
- Accepts Cu AWG stranded 8-18 and solid 10-18 wire
- OPM-1038(R)SW(C ) switch version requires a handle and shaft for through the door operation

### Features

- Padlockable with finger-safe terminals for safety. Qualified as IP20 per IEC 60529
- Cam-action handle for easy fuse module removal, offered with Class CC rejection clips or 13/32 x 1-1/2 (10x38mm) clips to meet global needs
- Wire ready with 35mm DIN-Rail or screw panel mounting (#8 screw, 1-1/4" long) saves installation time
- Fuse indication lights with optional communications for remote fuse status available. See data sheet for additional wiring details.

### Typical applications

- Industrial control
- Process control systems
- Automated warehouse systems
- Individual control circuits

### Dimensions — in (mm)

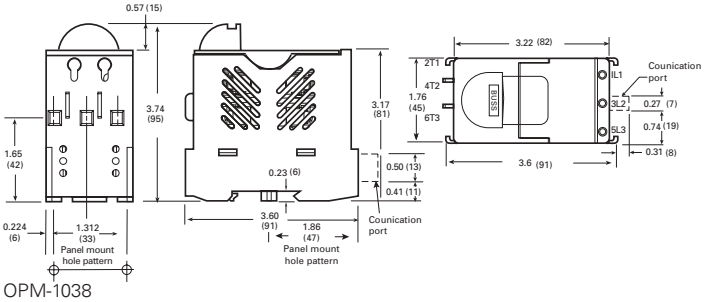


OPM-1038

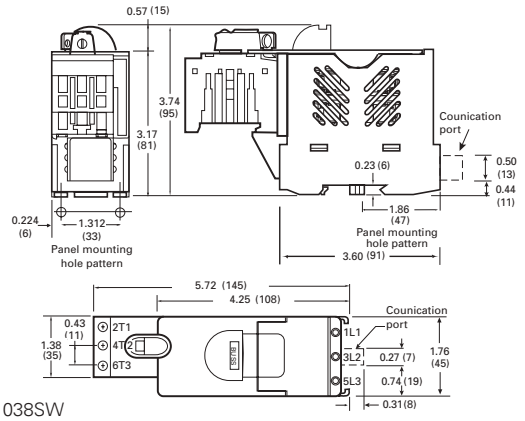


OPM-1038SW

| Catalog no. | | | | | | |
|---|---|---|---|---|---|---|
| **Without communication** | **With communication** | **Fuse type/size** | **Volts** | **Amps** | **SCCR** | **Agency information** |
| **OPM with disconnect switch** | | | | | | |
| OPM-1038SW | OPM-1038SWC* | Non-rejection, 13/32" x 1-1/2 or 10x38mm | 600 Vac UL/CSA, 660 V IEC | 30 A UL, 32 A IEC | ** | UL 508 Recognized, Guide NLRV2, File E161278, CSA Certified, C22.2 No. 39, Class 6225-01, File 47235, IEC 60947-3, CE |
| OPM-1038RSW | OPM-1038RSWC* | Class CC | 600 Vac UL/CSA | 30 A | 100 kA | UL 508 Listed, Guide NLRV, File E161278, CSA Certified, C22.2 No. 39, Class 6225-01, File 47235,IEC 60947-3, CE |
| **OPM without switch** | | | | | | |
| OPM-1038 | OPM-1038C* | Non-rejection, 13/32" x 1-1/2 or 10x38mm | 600 Vac UL/CSA, 660 V IEC | 30 A UL, 32 A IEC | ** | UL Recognized, Guide IZLT2, File E114853, CSA Certified, C22.2 No. 39, Class 6225-01, File 47235, IEC 60269-2-1, CE |
| OPM-1038R | OPM-1038RC* | Class CC | 600 Vac UL/CSA | 30 A | 200 kA | UL Listed, Guide IZLT2, File E114853, CSA Certified, C22.2 No. 39, Class 6225-01, File 47235, IEC 60269-2-1, CE |

* With communication not CE.
**Rating varies depending on fuse used in module; 10 kA default, higher SCCR requires testing and certification.

### Data sheets no. 1002 (OPM-1038) and 1103 (OPM-1038SW)

## OPM-NG Optima three-pole overcurrent protection module

The OPM-NG is a 3-pole protection module that's available in versions for Class CC, and UL 13/32" x 1-1/2" supplemental and 10x38mm IEC fuses.

### Catalog numbers

- OPM-NG-SC3 (Class CC)
- OPM-NG-SM3 (UL/IEC)

### Ratings

- Volts
  - 600 Vac (or less) UL and CSA
  - 690 Vac (or less) IEC
- Amps
  - 30 A UL and CSA
  - 32 A IEC
- SCCR
  - 200 kA Class CC
  - UL supplemental and IEC same as fuse IR up to 200 kA max

### Agency information

- UL; OPM-NG-SC3 UL Listed, UL 4248, File E14853, Guide IZLT. OPM-NG-SM3, UL Recognized, UL 4248, File E14853, Guide IZLT2. CSA Certified, C22.2 No. 4248, Class 6225-01, File 47235. IEC 60947-3 Utilization Category AC20B, CE

### Recommended Bussmann series fuses

- Class CC: LP-CC, FNQ-R, KTK-R
- UL 13/32" x 1-1/2": KTK, FNQ, KLM, FNM, BAF
- IEC 10x38mm: C10G, C10M, FWA, FWC

### Features

- 45mm width matches IEC starters
- 35mm DIN-Rail or panel mount. Max. screw size #8 (M4).
- Pressure plate terminations with dual-wire rated terminals (see wire table) and optional auxiliary contacts
- Integrated collapsible handle and fuse carrier cannot be removed from holder base
- Padlockable and IP20 finger-safe to IEC 60529

### Typical applications

- Mass produced control systems
- Process control systems
- Automated warehouse systems
- Individual control circuits

### Fuse holder AWG wire range (75°C Cu only)*

- 18-12, single/dual, torque 15 lb-in (1.7 N•m)
- 10-8, single/dual, torque 20 lb-in (2.2 N•m)

* Dual wire with same gauge and type

### Input power terminal wire range (AWG)

| | | Torque lb-in (N•m) | |
|---|---|---|---|
| **Wire** | **AWG (mm²) range** | **Connector** | **Screw clamp** |
| Solid | Single 14-2 (1.5-25) | 20 (2.2) | 15 (1.7) |
| | Dual 14-6 (1.5-10) | | |
| Stranded | Single 14-2 (1.5-25) | | |
| | Dual 12-6 (2.5-10) | | |

### Flammability rating

- UL V2

### Dimensions — mm (in)

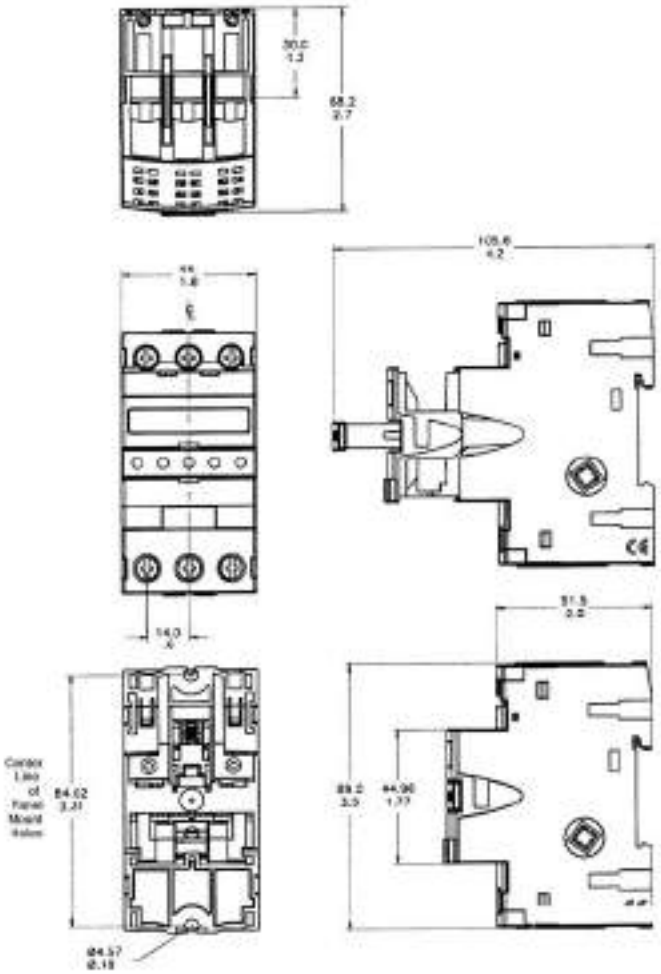

## 3743 open, add-on block for 13/32" x 1-1/2" (10x38mm) fuses

Single pole blocks lock into each other and can be added at any time. Each has a single end barrier.

3743 open, add-on block

### Ratings

RoHS 2011/65/EU

Volts 600 V

Amps 30 A

### Agency information

- UL Recognized, Guide IZLT2, File E14853, CE

3742 end barrier only

| Catalog no. | Description |
|---|---|
| 3743 | Add-on fuse block |
| 3742 | End barrier |
| 3723 | Block and end barrier marking strip (length 9-3/8") |

### Dimensions — in*

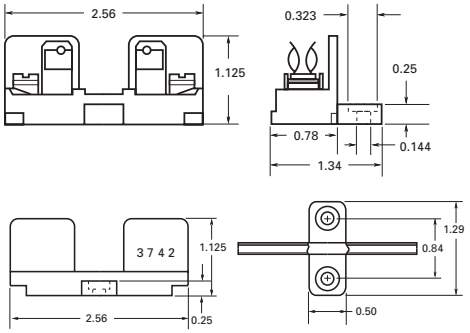


* Mounting screw hole diameter 0.147" (3.7mm). Counterbore diameter 0.636" (8mm). Max. #6 mounting screw.

## 4421 and 4515 open single pole blocks for 13/32" x 1-1/2" (10x38mm) fuses.

### Ratings

RoHS 2011/65/EU

- Volts 250 V
- Amps 30 A

### Agency information

- CE

4421 solder terminal

4515 screw terminal

| Catalog no. | Terminals | Base width |
|---|---|---|
| 4421 | Solder | 5/8" (16mm) |
| 4515 | Screw | 3/4" (19mm) |

### Dimensions — in*

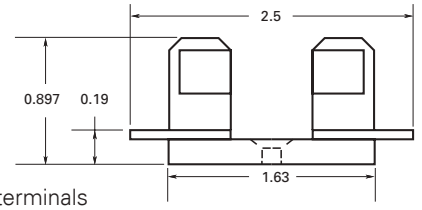


4421 solder terminals

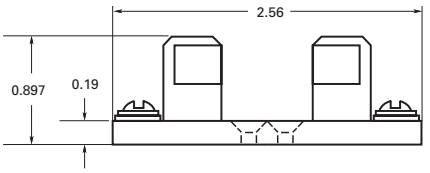


4515 with screw terminals

* Mounting screw hole diameter 0.147". Counterbore diameter 0.312". Max. #6 mounting screw.

**Data sheet no. 2104**

## BG and G Class G fuse blocks

Bussmann series open style BG and G fuse blocks are available in 1-, 2- and 3-pole configurations and offer a variety of terminal options.

### Ratings

- Volts
  - 600 V (0-20 A)
  - 480 V (25-60 A)
- Amps up to 60 A
- SCCR 100 kA RMS Sym.

### Agency information

- UL Listed, 4248-5, Guide IZLT, File E14853
- 1-60 A CSA Certified, C22.2 No. 39, Class 6225-01, File 47235
- RoHS compliant

### Mounting

- Panel
- DIN-Rail with DRA-1 adapter

| | Catalog no./terminal | | | | |
|---|---|---|---|---|---|
| **Amps** | **Screw w/ quick-connect*** | **Pressure plate w/ quick-connect*** | **Box lug** | **Box lug w/ retaining clip** | **Poles** |
| Up to 15 | BG3011SQ | BG3011PQ | BG3011B | — | 1 |
| | BG3012SQ | BG3012PQ | BG3012B | — | 2 |
| | BG3013SQ | BG3013PQ | BG3013B | — | 3 |
| 20 | BG3021SQ | BG3021PQ | BG3021B | — | 1 |
| | BG3022SQ | BG3022PQ | BG3022B | — | 2 |
| | BG3023SQ | BG3023PQ | BG3023B | — | 3 |
| 25-30 | BG3031S | BG3031P | BG3031B | — | 1 |
| | BG3032S | BG3032P | BG3032B | — | 2 |
| | BG3033S | BG3033P | BG3033B | — | 3 |
| 35-60 | — | — | — | G30060-1CR | 1 |
| | — | — | — | G30060-2CR | 2 |
| | — | — | G30060-3C** | G30060-3CR | 3 |
| **AWG wire range/ type** | 10-14 Cu | 10-18 Cu | 6-14 Cu (1-30 A)<br>2-14 Cu (35-60 A)<br>2-8 Al (35-60 A) | 2-14 Cu<br>2-8 Al | |

* Quick-connect rated 20 A max.
**Not RoHS compliant.

### Accessories

| Catalog no.† | Description | Color |
|---|---|---|
| PF1-WH | Fuse cover/puller | White |
| PF1-BK | | Black |

† Order one cover per pole.

### Dimensions — in

**1-30 A**

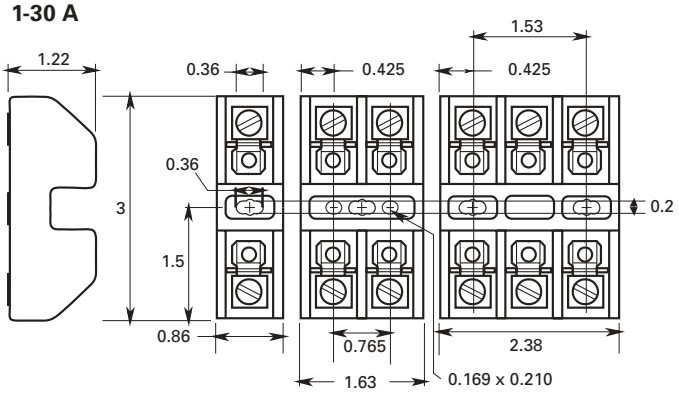


**35-60 A**

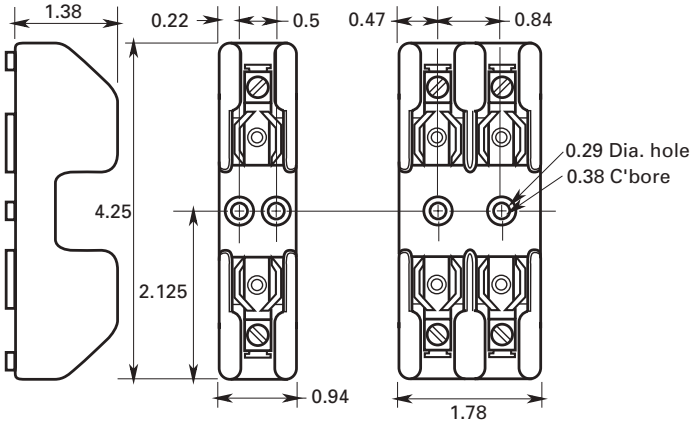


**35-60 A 3-Pole G30060-3C and G30060-3CR**

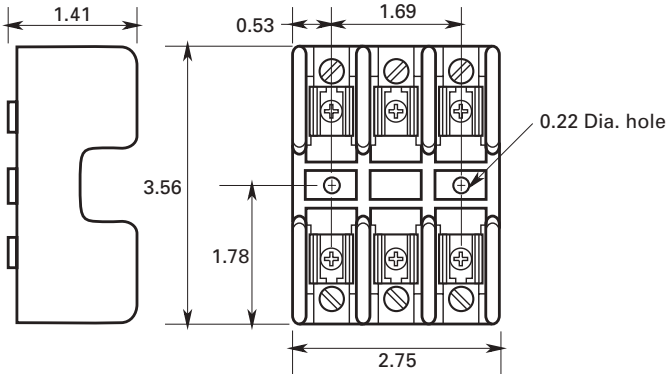

## CH14 modular fuse holders for 14x51mm fuses

Bussmann series 14x51mm modular fuse holders are suitable for use with standard cylindrical fuses and high speed FW type ferrule fuses. With DIN-Rail or panel mount flexibility, their compact dimensions helps reduce space, allows for higher cable bending radius. Low watts loss and wide range of accessories make them ideally suited for most industrial applications.

### Ratings

- Volts
  - 690 Vac/750 Vdc (IEC)
  - 700 Vac (UL)
- Amps
  - 50 A
- SCCR
  - 120 kA AC
  - 10 kA DC (PV only)
- Power acceptance
  - 5 W to IEC 60269-2 (rated)
  - 6.2 W (max)
- Rated impulse withstand voltage ($U_{imp}$)
  - 6 kV
- Microswitch (IEC)
  - 250 Vac / 5 A

RoHS 2011/65/EU

Shown with optional microswitch

### Agency information

- IEC 60269-1 and 2, UL Listed File E14853, CCC (UL/IEC)
- IEC 60269-1 and 2, UL Listed File E348242, CCC (PV)
- RoHS compliant

### Poles

1 to 4

### Protection index

- IP20

### Temperature range

- Storage
  - -40°C to +80°C (CH14D)
  - -20°C to +90°C (CHPV14 indicating)
  - -20°C to +120°C (CHPV14 non-indicating)
- Operating
  - -20°C to +70°C (CH14D)
  - -20°C to +90°C (CHPV14 indicating)
  - -20°C to +120°C (CHPV14 non-indicating)

### Features

- Ventilation zones optimized for better heat dissipation
- Built-in padlocking facility and IP20 degree of protection
- Photovoltaic version rated at 1500 Vdc (IEC only) for use with gPV fuses

| Catalog no. | Poles | Description |
|---|---|---|
| **UL/IEC holders** | | |
| CH141DNXU | 1 | Neutral holder |
| CH141DU | 1 | Fuse holder |
| CH142DU | 2 | |
| CH143DU | 3 | |
| CH144DU | 4 | |
| CH141DNU | 2 | 1-pole holder+ neutral |
| CH143DNU | 4 | 3-pole holder+ neutral |
| CH141DIU | 1 | Fuse holder with neon indicator |
| CH142DIU | 2 | |
| CH143DIU | 3 | |
| CH144DIU | 4 | |
| CH141DNIU | 2 | 1-pole holder + neutral + neon indicator |
| CH143DNIU | 4 | 3-pole holder + neutral + neon indicator |
| CH141DMSU-F | 1 | Holder + microswitch |
| CH143DMSU-F | 3 | |
| CH143DNMSU-F | 4 | 3-pole holder+ neutral + microswitch |
| CHPV141DI-48U | 1 | Holder with LED indicator |
| **1500 Vdc photovoltaic holders** | | |
| CHPV141U | 1 | Holder |
| CHPV141IU | 1 | Holder with neon indicator |
| CHPV142U | 2 | Holder |
| CHPV142IU | 2 | Holder with neon indicator |

### Accessories

| Catalog no. | Description |
|---|---|
| JV-L | Multi-pole connector kit; one kit gangs up to 4 poles |
| CH14-SPS | Microswitch for CH141D(I)U; 1 NO + 1 NC changeover type |
| CH14-TPS | Microswitch for CH143D(I)U; 1 NO + 1 NC changeover type |
| CH14-CTP | IP20 protection accessory for terminals with 10mm² or less cable |

**Data sheet no. 10080**

## CH22 modular fuse holders for 22x58mm fuses

Bussmann series 22x58mm modular fuse holders are suitable for use with standard cylindrical fuses and high speed FW type ferrule fuses. Their compact dimensions help reduce space and allow for higher cable bending radius. Low watts loss and wide range of accessories make them ideally suited for most industrial applications.

### Ratings

- Volts
  - 690 Vac/1000 Vdc (IEC)
  - 700 Vac (UL)
- Amps
  - 125 A (IEC)
  - 100 A (UL)
- SCCR
  - 120 kA AC
  - 50 kA DC
- Power acceptance
  - 9.5 W to IEC 60269-2
- Rated impulse withstand voltage ($U_{imp}$)
  - 6 kV
- Microswitch (IEC)
  - 250 Vac / 5 A

### Agency information

- IEC 60269-1 and 2, UL Listed File E14853, CCC, RoHS compliant

### Poles

1 to 4

### Protection index

- IP20 Finger-safe*

* Available protection accessory CH22-CTP for use with conductors of 10mm² or less

### Wire size (Cu only)

- 2.5-70mm²

### Temperature range

- Storage -40°C to +80°C
- Operating -20°C to +70°C

### Features

- Compact dimensions
- Ventilation zones optimized for a better heat dissipation
- Built-in padlocking facility
- IP20 degree of protection
- Flexibility to mount on DIN Rail and screw mounting
- Toolless DIN-Rail mounting, improves ease of use and reduces installation time and costs

| Catalog no. | Poles | Description |
|---|---|---|
| CH221DNXU | 1 | Neutral holder |
| CH221DU | 1 | Fuse holder |
| CH222DU | 2 | |
| CH223DU | 3 | |
| CH224DU | 4 | |
| CH221DIU | 1 | Holder with neon indicator |
| CH222DIU | 2 | |
| CH223DIU | 3 | |
| CH224DIU | 4 | |
| CH221DNU | 2 | 1-pole holder + neutral |
| CH223DNU | 4 | 3-pole holder + neutral |
| CH221DNIU | 2 | 1-pole holder+ neutral + neon indicator |
| CH223DNIU | 4 | 3-pole holder+ neutral + neon indicator |
| CH221DMSU-F | 1 | Holder with microswitch (pre-breaking/fuse operation) |
| CH223DMSU-F | 3 | 3-pole holder + microswitch (pre-breaking/ fuse operation) |
| CH223DNMSU-F | 3 | 3-pole holder + neutral + microswitch (pre-breaking/fuse operation) |
| CH221DI-48U | 1 | 1-pole holder with LED Indicator |

### Accessories

| Catalog no. | Description |
|---|---|
| JV-L | Multi-pole connector kit; one kit gangs up to 4 poles |
| CH22-SPS | Microswitch for CH221D(I)U; 1 NO + 1 NC changeover type |
| CH22-TPS | Microswitch for CH223D(I)U; 1 NO + 1 NC changeover type |
| CH22-CTP | IP20 protection accessory for terminals with 10mm² or less cable |

## JM70100 700 V modular fuse blocks and modular power distribution fuse blocks for 22x58mm IEC fuses

Fuses not included.

The patented JM70100 fuse block products are available for 22x58mm gG, aM and select high speed fuses as either a fuse block or power distribution fuse block. The power distribution fuse blocks eliminate the need for a separate power distribution block, and require up to 78 percent less panel space while reducing installation time and labor by an average of 36 percent.

All blocks are equipped with a fuse clip reinforcing spring to minimize temperature rise while maintaining reliable surface contact between the fuse and clip over the block's service life.

Rated for applications up to 700 V and 100 amps, their modular design allows for assembly of multiple pole configurations at the point of use. These blocks can also be ordered as factory configured 2- and 3-pole versions.

The versatile 35mm DIN-rail or panel mount capability allows using the same block for multiple applications and reducing inventory cost.

Optional IP20 finger-safe covers enhance electrical safety with a lockout/tagout feature and can be ordered with or without open fuse indication to speed troubleshooting.

The high 200 kA SCCR rating helps achieve a higher assembly short-circuit current rating (SCCR) for compliance with NEC® sections 110.10, 409.110(4), 409.22, 440.4(B), 670.3(A)(4) and 670.5.

Easy circuit identification with available universal labels for blocks and covers.

### Fuse class

- IEC 22x58mm gG, gL, aM and aR and gR high speed fuses

### Ratings

- Volts 700 V
- Amps 100 A
- SCCR 200 kA RMS Sym.

### Agency information

- Blocks; UL Recognized, Guide IZLT2, File E14853, CSA Component acceptance 47235 — 6225-01
- Covers UL Listed, Guide JDVS, File E58836
- RoHS compliant

### Poles

- 1-, 2-, 3-pole
- Single-pole units snap together to create desired number of poles

### Flammability ratings

- Blocks: UL 94V0, self-extinguishing
- Covers: UL 94HB, self-extinguishing

### Operating and storage temperature range

- Blocks -40°C to +120°C
- Covers; Non-indicating -40°C to +120°C, Indicating -20°C to +90°C

### Conductors

- 75°C Cu/Al*

* Conductors with higher temperature rating may be used, but at their 75°C ampacity.

### Accessories

- Optional IP20 finger-safe covers in indicating and non-indicating versions. Order one for each pole
- Universal marker labels, Bussmann series catalog number TM26CB

| Catalog no. | Optional covers* | Fuse amp range | Poles | Lineside conductors and torque | | | Loadside conductors and torque | | |
|---|---|---|---|---|---|---|---|---|---|
| | | | | Conductors | Size (AWG) | N•m (lb-in) | Conductors | Size (AWG) | N•m (lb-in) |
| **Fuse blocks** | | | | | | | | | |
| JM70100-1CR | CVR-J-60060<br>CVRI-J-60060** | Up to 100 | 1 | Cu 2-14<br>Al 2-8 | 2-3 | 5.6 (50) | Cu 2-14<br>Al 2-8 | 2-3 | 5.6 (50) |
| JM70100-2CR | | | 2 | | 4-6 | 5.1 (45) | | 4-6 | 5.1 (45) |
| JM70100-3CR | | | 3 | | 8 | 4.5 (40) | | 8 | 4.5 (40) |
| | | | | | 10-14 | 4.0 (35) | | 10-14 | 4.0 (35) |
| **Power distribution fuse blocks** | | | | | | | | | |
| JM70100-1MW14 | CVR-J-60060<br>CVRI-J-60060** | Up to 100 | 1 | Cu 2-14<br>Al 2-8 | 2-3 | 5.6 (50) | Cu (1) 8-18<br>Cu (2) 12-18<br>Al (1) 8 Str<br>Al (1) 10 Sol | Cu (1) 8 | 3.4 (30) |
| JM70100-2MW14 | | | 2 | | 4-6 | 5.1 (45) | | Cu (1) 10-18 | 2.8 (25) |
| JM70100-3MW14 | | | 3 | | 8 | 4.5 (40) | | Cu (2) 12-18 | 3.4 (30) |
| | | | | | 10-14 | 4.0 (35) | | Al (1) 8-10 | 3.4 (30) |

* Covers sold separately, one cover per pole.
**Open fuse indication requires 90 volts minimum and closed circuit to operate.

**Data sheet no. 10496**

## HM modular 250 V and 600 V Class H(K) fuse blocks

RoHS 2011/65/EU

Class H(K) modular fuse blocks enhance safety for any panel or electrical system design and are available for the full Class H(K) fuse amp range.

All blocks are available as snap-together single-pole versions for toolless assembly of multiple poles at point of use, or as factory configured 2-, and 3-pole versions to meet stocking requirements.

All blocks are equipped with a fuse clip reinforcing spring to minimize temperature rise while maintaining reliable surface contact between the fuse and clip over the block's service life.

30 and 60 amp ferrule fuse blocks save panel space with the smallest width dimension on the market and feature DIN-Rail and panel mount versatility.

100 to 600 amp knifeblade fuse blocks feature phase barriers between poles for additional safety with up to four mounting holes per pole to increase installation flexibility. All knifeblade blocks meet UL creep and clearance requirements for Industrial Power Circuits (UL 508 and UL 845), with the 200 to 600 amp blocks meeting the higher UL creep and clearance requirements for Power Distribution Standards (UL 98, UL 67, UL 489, UL 891 and UL 869A)

All blocks are available with optional IP20 finger-safe high clarity, see-through covers for inspecting wire terminations or thermography measurements without removal. All covers enhance safety by featuring probe holes for easier, safer testing and a lockout/tagout capability. These covers also have optional open fuse indication to speed troubleshooting.

Easy circuit identification is available for 30 and 60 amp blocks and covers with universal marker labels.

### Ratings

- Volts
  - 250 V
  - 600 V
- Amps up to 600
- SCCR 10 kA RMS Sym.

### Agency information

- Blocks;UL Listed, Guide IZLT and IZLT7, File E14853, CSA Certified 47235-6225-01, CE
- RoHS Compliant
- Covers; UL Listed, Guide JDVS, File E58836, CSA Certified 47235-6225-01 (30 and 60 A)
- RoHS Compliant

### Poles

- 1-, 2-, 3-pole units factory assembled
- Single-pole units snap together to create desired number of poles

### Flammability ratings

- Blocks: UL 94V0, self-extinguishing
- Covers: UL 94HB, self-extinguishing

### Operating and storage temperature range

- Blocks -40°C to +120°C
- Covers; Non-Indicating -40°C to +120°C, Indicating -20°C to +90°C*

* Indication requires minimum 90 V and closed circuit to illuminate.

### Conductors

- See catalog numbers for details and torque specifications

### Class K 30 and 60 amp blocks and covers

| Fuse amp range | Poles | Catalog no./terminal type | | | | | Optional covers* | |
|---|---|---|---|---|---|---|---|---|
| | | Box lug/slot screw | Box lug/hex screw | 10-32 Phil-slot screw | Screw with quick-connect | Pressure plate | Indicating** | Non-indicating |
| **250 volt blocks** | | | | | | | | |
| up to 30 | 1 | HM25030-1CR | HM25030-1CHR | HM25030-1SR | HM25030-1QR | HM25030-1PR | CVRI-RH-25030 | CVR-RH-25030 |
| | 2 | HM25030-2CR | HM25030-2CHR | HM25030-2SR | HM25030-2QR | HM25030-2PR | | |
| | 3 | HM25030-3CR | HM25030-3CHR | HM25030-3SR | HM25030-3QR | HM25030-3PR | | |
| 35 to 60 | 1 | HM25060-1CR | HM25060-1CHR | — | — | — | CVRI-RH-25060 | CVR-RH-25060 |
| | 2 | HM25060-2CR | HM25060-2CHR | | | | | |
| | 3 | HM25060-3CR | HM25060-3CHR | | | | | |
| **600 volt blocks** | | | | | | | | |
| up to 30 | 1 | HM60030-1CR | HM60030-1CHR | HM60030-1SR | — | HM60030-1PR | CVRI-RH-60030 | CVR-RH-60030 |
| | 2 | HM60030-2CR | HM60030-2CHR | HM60030-2SR | | HM60030-2PR | | |
| | 3 | HM60030-3CR | HM60030-3CHR | HM60030-3SR | | HM60030-3PR | | |
| 35 to 60 | 1 | HM60060-1CR | HM60060-1CHR | — | | — | CVRI-RH-60060 | CVR-RH-60060 |
| | 2 | HM60060-2CR | HM60060-2CHR | | | | | |
| | 3 | HM60060-3CR | HM60060-3CHR | | | | | |

* Covers sold separately, one cover per pole.
**Open fuse indication requires 90 volts minimum and closed circuit to operate.



Data sheet no. 10487

## Class H 100 to 600 amp knifeblade blocks and covers

| Fuse amp range | Poles | Catalog no. | Optional covers* Non-indicating | Optional covers* Indicating** | Conductors*** Solid and stranded | Conductors*** Fine stranded | Torque N•m (lb-in) |
|---|---|---|---|---|---|---|---|
| **250 volt blocks** | | | | | | | |
| 70-100 | 1 | HM25100-1CR | CVR-RH-25100 | CVRI-RH-25100 | — | Cu 1-3 AWG | 6.2 (55) |
| | | | | | 1/0-3 AWG; (2) Cu 4-6 AWG | Cu 4-6 AWG | 5.6 (50) |
| | 2 | HM25100-2CR | | | 2 4-6 AWG; (2) Cu 8 AWG | Cu 8 AWG | 5.1 (45) |
| | | | | | 8 AWG; (2) Cu 10-14 AWG | — | 4.5 (40) |
| | 3 | HM25100-3CR | | | Cu 10-14 AWG; Al 10-12 AWG | — | 4.0 (35) |
| 110-200 | 1 | HM25200-1CR | CVR-RH-25200 | CVRI-RH-25200 | 250kcmil-1 AWG | Cu 3/0-1 AWG | 42 (375) |
| | 2 | HM25200-2CR | | | 2-6 AWG; (2) Cu 2-6 AWG | Cu 2-6 AWG | 31 (275) |
| | 3 | HM25200-3CR | | | | | |
| 225-400 | 1 | HM25400-1CR | CVR-RH-25400 | CVRI-RH-25400 | 600kcmil | N/A | 57 (500) |
| | 2 | HM25400-2CR | | | 500kcmil-4 AWG | | 51 (450) |
| | 3 | HM25400-3CR | | | (2) Cu 3/0 - 4 AWG | | 57 (500) |
| | | | | | (2) Al 3/0 - 4 AWG | | 34 (300) |
| 450-600 | 1 | HM25600-1CR | CVR-RH-25600 | CVRI-RH-25600 | 2 (2) 500kcmil-4 AWG | N/A | 51 (450) |
| | 2 | HM25600-2CR | | | | | |
| | 3 | HM25600-3CR | | | | | |
| **600 volt blocks** | | | | | | | |
| 70-100 | 1 | HM60100-1CR | CVR-RH-60100 | CVRI-RH-60100 | — | Cu 1-3 AWG | 6.2 (55) |
| | | | | | 1/0-3 AWG; (2) Cu 4-6 AWG | Cu 4-6 AWG | 5.6 (50) |
| | 2 | HM60100-2CR | | | 2 4-6 AWG; (2) Cu 8 AWG | Cu 8 AWG | 5.1 (45) |
| | | | | | 8 AWG; (2) Cu 10-14 AWG | — | 4.5 (40) |
| | 3 | HM60100-3CR | | | Cu 10-14 AWG; Al 10-12 AWG | — | 4.0 (35) |
| 110-200 | 1 | HM60200-1CR | CVR-RH-60200 | CVRI-RH-60200 | 250kcmil-1 AWG | Cu 3/0-1 AWG | 42 (375) |
| | 2 | HM60200-2CR | | | 2-6 AWG; (2) Cu 2-6 AWG | Cu 2-6 AWG | 31 (275) |
| | 3 | HM60200-3CR | | | | | |
| 225-400 | 1 | HM60400-1CR | CVR-RH-60400 | CVRI-RH-60400 | 600kcmil | N/A | 57 (500) |
| | 2 | HM60400-2CR | | | 500kcmil-4 AWG | | 51 (450) |
| | 3 | HM60400-3CR | | | (2) Cu 3/0 - 4 AWG | | 57 (500) |
| | | | | | (2) Al 3/0 - 4 AWG | | 34 (300) |
| 450-600 | 1 | HM60600-1CR | CVR-RH-60600 | CVRI-RH-60600 | 2 (2) 500kcmil-4 AWG | N/A | 51 (450) |
| | 2 | HM60600-2CR | | | | | |
| | 3 | HM60600-3CR | | | | | |

* Covers sold separately.
** Open fuse indication requires 90 volts minimum and closed circuit to operate.
*** Ratings for copper and aluminum conductors except where otherwise noted.

## Class K 30 and 60 amp block terminals and conductors

| Terminal type | AWG type/range | AWG | Torque N•m (lb-in) |
|---|---|---|---|
| Box lug | 75°C Cu 2-14, AL 2-8 | 2-3 | 5.6 (50) |
| | | 4-6 | 5.1 (45) |
| | | 8 | 4.5 (40) |
| | | 10-14 | 4.0 (35) |
| 10-32 Phil-slot screw | 75/90°C Cu 10-18 | 10-18 | 2.3 (20) |
| Screw with quick-connect* | | | |
| Pressure plate | | | |

* 3/16" quick-connect terminal maximum amps dependent on female spade connector and wire ratings.

## Recommended DIN-Rail stops for 30 and 60 amp blocks

| Catalog no. | Description |
|---|---|
| BRKT-ND | DIN-Rail end stops |
| BRKT-NDSCREW2 | |

**Data sheet no. 10487**

## RM modular 250 V and 600 V Class R fuse blocks

Class R modular fuse blocks enhance safety for any panel or electrical system design and are available for the full Class R fuse amp range.

All blocks are available as snap-together single-pole versions for toolless assembly of multiple poles at point of use, or as factory configured 2-, and 3-pole versions to meet stocking requirements.

All blocks are equipped with a fuse clip reinforcing spring to minimize temperature rise while maintaining reliable surface contact between the fuse and clip over the block's service life.

30 and 60 amp ferrule fuse blocks save panel space with the smallest width dimension on the market and feature DIN-Rail and panel mount versatility.

100 to 600 amp knifeblade fuse blocks feature phase barriers between poles for additional safety with up to four mounting holes per pole to increase installation flexibility. All knifeblade blocks meet UL creep and clearance requirements for Industrial Power Circuits (UL 508 and UL 845), with the 200 to 600 amp blocks meeting the higher UL creep and clearance requirements for Power Distribution Standards (UL 98, UL 67, UL 489, UL 891 and UL 869A).

All blocks are available with optional IP20 finger-safe high clarity, see-through covers for inspecting wire terminations or thermography measurements without removal. All covers enhance safety by featuring probe holes for easier, safer testing and a lockout/tagout capability. These covers also have optional open fuse indication to speed troubleshooting.

Easy circuit identification is available for 30 and 60 amp blocks and covers with universal marker labels.

### Ratings

- Volts
  - 250 V
  - 600 V
- Amps up to 600
- SCCR 200 kA RMS Sym.

### Agency information

- Blocks; UL Listed Guide IZLT and IZLT7, File E14853, CSA Certified 47235-6225-01, CE
- Covers; UL Listed Guide JDVS, File E58836, CSA Certified 47235-6225-01 (30 and 60 A)
- RoHS Compliant

### Poles

- 1-, 2-, 3-pole units factory assembled
- Single-pole units snap together to create desired number of poles

### Flammability ratings

- Blocks: UL 94V0, self-extinguishing
- Covers: UL 94HB, self-extinguishing

### Operating and storage temperature range

- Blocks -40°C to +120°C
- Covers; Non-Indicating -40°C to +120°C, Indicating -20°C to +90°C*

* Indication requires minimum 90 V and closed circuit to illuminate.

### Conductors

- See catalog numbers for details and torque specifications

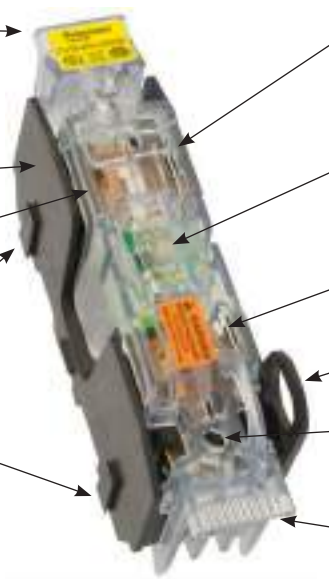


*No fuse derating necessary.



Data sheet no. 10489

## Class R 30 and 60 amp blocks and covers

| Fuse amp range | Poles | Catalog no./terminal type: Box lug/ slot screw | Box lug/ hex screw | 10-32 Phil-slot screw | screw with quick-connect | Pressure plate | Optional covers*: Indicating** | Non-indicating |
|---|---|---|---|---|---|---|---|---|
| **250 volt blocks** | | | | | | | | |
| up to 30 | 1 | RM25030-1CR | RM25030-1CHR | RM25030-1SR | RM25030-1QR | RM25030-1PR | CVRI-RH-25030 | CVR-RH-25030 |
| | 2 | RM25030-2CR | RM25030-2CHR | RM25030-2SR | RM25030-2QR | RM25030-2PR | | |
| | 3 | RM25030-3CR | RM25030-3CHR | RM25030-3SR | RM25030-3QR | RM25030-3PR | | |
| 35 to 60 | 1 | RM25060-1CR | RM25060-1CHR | — | — | — | CVRI-RH-25060 | CVR-RH-25060 |
| | 2 | RM25060-2CR | RM25060-2CHR | | | | | |
| | 3 | RM25060-3CR | RM25060-3CHR | | | | | |
| **600 volt blocks** | | | | | | | | |
| up to 30 | 1 | RM60030-1CR | RM60030-1CHR | RM60030-1SR | — | RM60030-1PR | CVRI-RH-60030 | CVR-RH-60030 |
| | 2 | RM60030-2CR | RM60030-2CHR | RM60030-2SR | | RM60030-2PR | | |
| | 3 | RM60030-3CR | RM60030-3CHR | RM60030-3SR | | RM60030-3PR | | |
| 35 to 60 | 1 | RM60060-1CR | RM60060-1CHR | — | | — | CVRI-RH-60060 | CVR-RH-60060 |
| | 2 | RM60060-2CR | RM60060-2CHR | | | | | |
| | 3 | RM60060-3CR | RM60060-3CHR | | | | | |

* Covers sold separately, order one cover per pole.
**Open fuse indication requires 90 volts minimum and closed circuit to operate.

## Class R 30 and 60 amp block terminals and conductors

| Terminal type | AWG type/range | AWG | Torque N•m (lb-in) |
|---|---|---|---|
| Box lug | 75°C Cu 2-14, AL 2-8 | 2-3 | 5.6 (50) |
| | | 4-6 | 5.1 (45) |
| | | 8 | 4.5 (40) |
| | | 10-14 | 4.0 (35) |
| 10-32 Phil-slot screw | 75/90°C Cu 10-18 | 10-18 | 2.3 (20) |
| Pressure plate | | | |
| Screw with quick-connect* | | | |

* 3/16" quick-connect terminal maximum amps dependent on female spade connector and wire ratings.

## Recommended DIN-Rail stops for 30 and 60 amp blocks

| Catalog no. | Description |
|---|---|
| BRKT-ND | DIN-Rail end stops |
| BRKT-NDSCREW2 | |

**Data sheet no. 10489**

## Class R 100 to 600 amp knifeblade blocks and covers

| Fuse amp range | Poles | Catalog no. | Optional covers* | | Conductors*** | | Torque N•m (lb-in) |
|---|---|---|---|---|---|---|---|
| | | | Non-indicating | Indicating** | Solid and stranded | Fine stranded | |
| **250 volt blocks** | | | | | | | |
| 70-100 | 1 | RM25100-1CR | CVR-RH-25100 | CVRI-RH-25100 | — | Cu 1-3 AWG | 6.2 (55) |
| | | | | | 1/0-3 AWG; (2) Cu 4-6 AWG | Cu 4-6 AWG | 5.6 (50) |
| | 2 | RM25100-2CR | | | 2 4-6 AWG; (2) Cu 8 AWG | Cu 8 AWG | 5.1 (45) |
| | | | | | 8 AWG; (2) Cu 10-14 AWG | — | 4.5 (40) |
| | 3 | RM25100-3CR | | | Cu 10-14 AWG; Al 10-12 AWG | — | 4.0 (35) |
| 110-200 | 1 | RM25200-1CR | CVR-RH-25200 | CVRI-RH-25200 | 250kcmil-1 AWG | Cu 3/0-1 AWG | 42 (375) |
| | 2 | RM25200-2CR | | | 2-6 AWG; (2) Cu 2-6 AWG | Cu 2-6 AWG | 31 (275) |
| | 3 | RM25200-3CR | | | | | |
| 225-400 | 1 | RM25400-1CR | CVR-RH-25400 | CVRI-RH-25400 | 600kcmil | N/A | 57 (500) |
| | 2 | RM25400-2CR | | | 500kcmil-4 AWG | | 51 (450) |
| | 3 | RM25400-3CR | | | (2) Cu 3/0 - 4 AWG | | 57 (500) |
| | | | | | (2) Al 3/0 - 4 AWG | | 34 (300) |
| 450-600 | 1 | RM25600-1CR | CVR-RH-25600 | CVRI-RH-25600 | 2 (2) 500kcmil-4 AWG | N/A | 51 (450) |
| | 2 | RM25600-2CR | | | | | |
| | 3 | RM25600-3CR | | | | | |
| **600 volt blocks** | | | | | | | |
| 70-100 | 1 | RM60100-1CR | CVR-RH-60100 | CVRI-RH-60100 | — | Cu 1-3 AWG | 6.2 (55) |
| | | | | | 1/0-3 AWG; (2) Cu 4-6 AWG | Cu 4-6 AWG | 5.6 (50) |
| | 2 | RM60100-2CR | | | 2 4-6 AWG; (2) Cu 8 AWG | Cu 8 AWG | 5.1 (45) |
| | | | | | 8 AWG; (2) Cu 10-14 AWG | — | 4.5 (40) |
| | 3 | RM60100-3CR | | | Cu 10-14 AWG; Al 10-12 AWG | — | 4.0 (35) |
| 110-200 | 1 | RM60200-1CR | CVR-RH-60200 | CVRI-RH-60200 | 250kcmil-1 AWG | Cu 3/0-1 AWG | 42 (375) |
| | 2 | RM60200-2CR | | | 2-6 AWG; (2) Cu 2-6 AWG | Cu 2-6 AWG | 31 (275) |
| | 3 | RM60200-3CR | | | | | |
| 225-400 | 1 | RM60400-1CR | CVR-RH-60400 | CVRI-RH-60400 | 600kcmil | N/A | 57 (500) |
| | 2 | RM60400-2CR | | | 500kcmil-4 AWG | | 51 (450) |
| | 3 | RM60400-3CR | | | (2) Cu 3/0 - 4 AWG | | 57 (500) |
| | | | | | (2) Al 3/0 - 4 AWG | | 34 (300) |
| 450-600 | 1 | RM60600-1CR | CVR-RH-60600 | CVRI-RH-60600 | 2 (2) 500kcmil-4 AWG | N/A | 51 (450) |
| | 2 | RM60600-2CR | | | | | |
| | 3 | RM60600-3CR | | | | | |

* Covers sold separately, order one cover per pole.
** Open fuse indication requires 90 volts minimum and closed circuit to operate.
*** Ratings for copper and aluminum conductors except where otherwise noted.

## HM modular 250 V and 600 V Class H(K) power distribution fuse blocks

250 volt 60 amp modular blocks.

600 volt 30 and 60 amp modular blocks.

The patented 30 and 60 amp 250 V and 600 V Class H(K) power distribution fuse blocks use fewer wire connections to reduce watts loss and overall operating temperature of the panel, while simplifying panel layout. Available in ratings up to 400 amps, they use up to 57 percent less panel space while lowering inventory costs, and reducing installation time and labor by an average of 33 percent.

All blocks are equipped with a fuse clip reinforcing spring to minimize temperature rise while maintaining reliable surface contact between the fuse and clip over the block's service life.

Available as snap-together one-pole units for toolless assembly of multiple poles at point of use or factory configured 2- and 3-pole units to meet popular stocking requirements.

Optional see-through cover enhances safety with IP20 finger-safe protection, lockout/tagout capability and open circuit indication.

DIN-Rail and panel mount versatility allows one product to be used for multiple applications without incurring additional inventory cost.

### Ratings

- Volts
  - 250 V
  - 600 V
- Amps up to 60 A
- SCCR 10 kA RMS Sym.

### Agency information

- Blocks: UL Listed, Guide IZLT, File E14853, CSA Certified 47235 - 6225-01
- Covers: UL Listed, Guide JDVS, File E58836
- RoHS compliant

### Poles

- 1-, 2-, 3-pole
- Single-pole units snap together to create desired number of poles

### Flammability ratings

- Blocks: UL 94V0, self-extinguishing
- Covers: UL 94HB, self-extinguishing

### Operating and storage temperature range

- Blocks: -40°C to +120°C
- Covers: Non-indicating -40°C to +120°C, Indicating -20°C to +90°C

### Conductors

- 75°C Cu/Al (unless otherwise noted)

### Accessories

- Optional IP20 finger-safe covers in indicating and non-indicating versions. Order one for each pole
- DIN-Rail end stops, catalog numbers BRKT-ND or BRKT-NDSCRW2

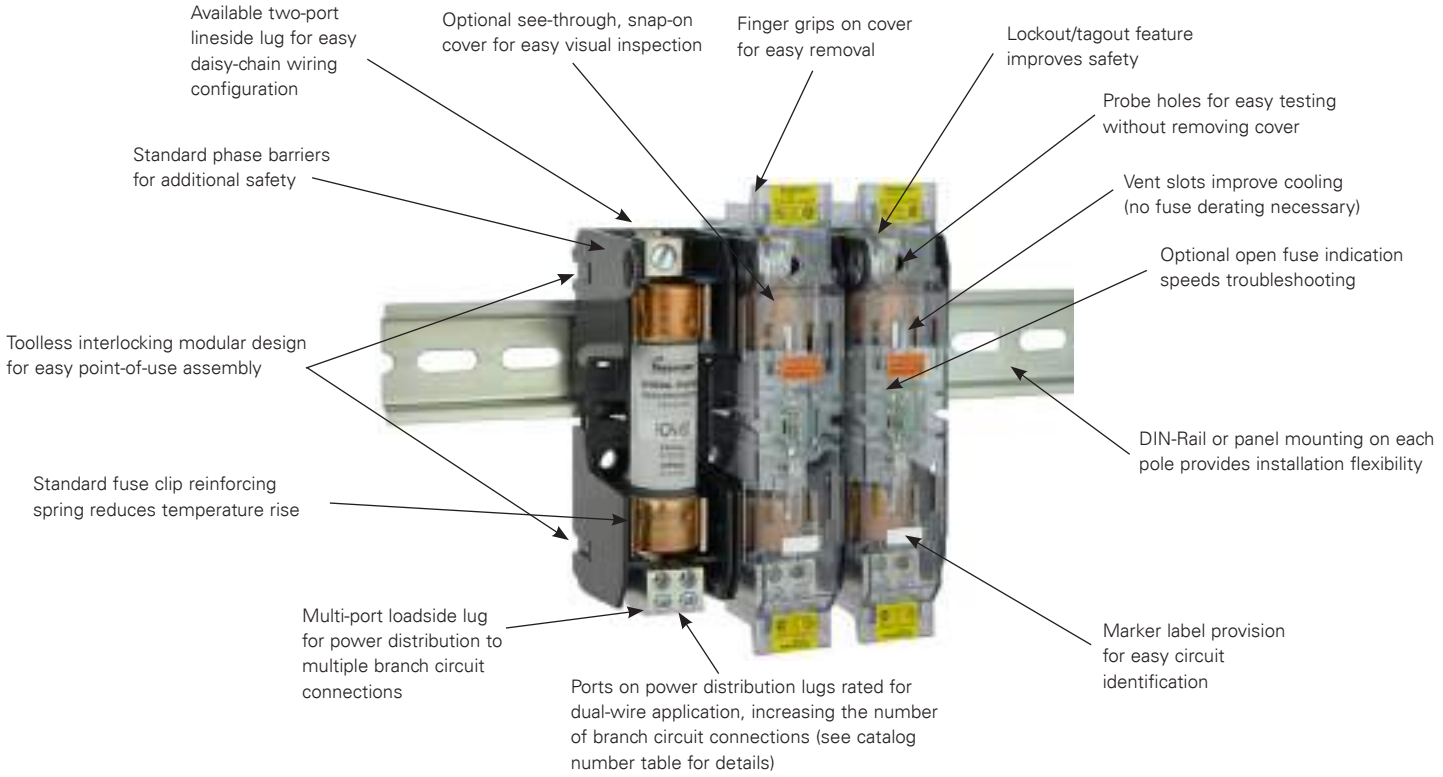


**Data sheet no. 10490**

| Catalog no. | Optional covers* | Fuse amp range | Poles | Lineside (conductors per port) Conductors | Ports/ pole | Torque AWG | N•m (lb-in) | Loadside (conductors per port) Conductors | Ports/ pole | Torque AWG | N•m (lb-in) |
|---|---|---|---|---|---|---|---|---|---|---|---|
| **250 volt blocks** | | | | | | | | | | | |
| HM25060-1MW12 | N/A | 35-60 | 1 | Cu 2-14 Al 2-8 | 2 | 2-4 | 5.6 (50) | Cu 2-14 Al 2-8 | 1 | 2-3 | 5.6 (50) |
| HM25060-2MW12 | | | 2 | | | 6-10 | 4.5 (40) | | | 4-6 | 5.1 (45) |
| HM25060-3MW12 | | | 3 | | | 12-14 | 1.7 (15) | | | 8 | 4.5 (40) |
| | | | | | | | | | | 10-14 | 4.0 (35) |
| HM25060-1MW14 | CVR-RH-25060 CVRI-RH-25060** | | 1 | Cu 2-14 Al 2-8 | 1 | 2-3 | 5.6 (50) | Cu (1) 8-14 Cu (2) 12-14*** Al (1) 8 Str Al (1) 10 Sol | 4 | Cu (1) 8 | 3.4 (30) |
| HM25060-2MW14 | | | 2 | | | 4-6 | 5.1 (45) | | | Cu (1) 10-14 | 2.8 (25) |
| HM25060-3MW14 | | | 3 | | | 8 | 4.5 (40) | | | Cu (2) 12-14 | 3.4 (30) |
| | | | | | | 10-14 | 4.0 (35) | | | Al (1) 8-10 | 3.4 (30) |
| HM25060-1MW24† | N/A | | 1 | Cu 2-14 Al 2-8 | 2 | 2-4 | 5.6 (50) | Cu (1) 8-14 Cu (2) 12-14*** Al (1) 8 Str Al (1) 10 Sol | 4 | Cu (1) 8 | 3.4 (30) |
| HM25060-2MW24† | | | 2 | | | 6-10 | 4.5 (40) | | | Cu (1) 10-14 | 2.8 (25) |
| HM25060-3MW24† | | | 3 | | | 12-14 | 1.7 (15) | | | Cu (2) 12-14 | 3.4 (30) |
| | | | | | | | | | | Al (1) 8-10 | 3.4 (30) |
| **600 volt blocks** | | | | | | | | | | | |
| HM60030-1MW14† | N/A | up to 30 | 1 | Cu 2-14 Al 2-8 | 1 | 2-3 | 5.6 (50) | Cu (1) 8-14 Cu (2) 12-14*** Al (1) 8 Str Al (1) 10 Sol | 4 | Cu (1) 8 | 3.4 (30) |
| HM60030-2MW14† | | | 2 | | | 4-6 | 5.1 (45) | | | Cu (1) 10-14 | 2.8 (25) |
| HM60030-3MW14† | | | 3 | | | 8 | 4.5 (40) | | | Cu (2) 12-14 | 3.4 (30) |
| | | | | | | 10-14 | 4.0 (35) | | | Al (1) 8-10 | 3.4 (30) |
| HM60060-1MW12 | CVR-RH-60060 CVRI-RH-60060** | 35-60 | 1 | Cu 2-14 Al 2-8 | 2 | 2-4 | 5.6 (50) | Cu 2-14 Al 2-8 | 1 | 2-3 | 5.6 (50) |
| HM60060-2MW12 | | | 2 | | | 6-10 | 4.5 (40) | | | 4-6 | 5.1 (45) |
| HM60060-3MW12 | | | 3 | | | 12-14 | 1.7 (15) | | | 8 | 4.5 (40) |
| | | | | | | | | | | 10-14 | 4.0 (35) |
| HM60060-1MW14 | | | 1 | Cu 2-14 Al 2-8 | 1 | 2-3 | 5.6 (50) | Cu (1) 8-14 Cu (2) 12-14*** Al (1) 8 Str Al (1) 10 Sol | 4 | Cu (1) 8 | 3.4 (30) |
| HM60060-2MW14 | | | 2 | | | 4-6 | 5.1 (45) | | | Cu (1) 10-14 | 2.8 (25) |
| HM60060-3MW14 | | | 3 | | | 8 | 4.5 (40) | | | Cu (2) 12-14 | 3.4 (30) |
| | | | | | | 10-14 | 4.0 (35) | | | Al (1) 8-10 | 3.4 (30) |
| HM60060-1MW24† | | | 1 | Cu 2-14 Al 2-8 | 2 | 2-4 | 5.6 (50) | Cu (1) 8-14 Cu (2) 12-14*** Al (1) 8 Str Al (1) 10 Sol | 4 | Cu (1) 8 | 3.4 (30) |
| HM60060-2MW24† | | | 2 | | | 6-10 | 4.5 (40) | | | Cu (1) 10-14 | 2.8 (25) |
| HM60060-3MW24† | | | 3 | | | 12-14 | 1.7 (15) | | | Cu (2) 12-14 | 3.4 (30) |
| | | | | | | | | | | Al (1) 8-10 | 3.4 (30) |

* Order one cover per pole.
** With open fuse indication. 90 V minimum and closed circuit required for illumination.
*** Dual wire rated lugs with same wire size and stranding.
† Rated for use with 75°C/90°C Cu/Al conductors.

## RM modular 250 V and 600 V Class R power distribution fuse blocks

RoHS 2011/65/EU

The patented 30 and 60 amp 250 V and 600 V Class R power distribution fuse blocks use fewer wire connections to reduce watts loss and overall operating temperature of the panel, while simplifying panel layout. Available in ratings up to 400 amps, they use up to 57 percent less panel space while lowering inventory costs, and reducing installation time and labor by an average of 33 percent.

High 200 kA SCCR helps achieve a higher assembly short-circuit current rating (SCCR) for compliance with NEC sections 110.10, 409.110(4), 409.22, 440.4(B), 670.3(A)(4) and 670.5.

All blocks are equipped with a fuse clip reinforcing spring to minimize temperature rise while maintaining reliable surface contact between the fuse and clip over the block's service life.

Available as snap-together one-pole units for toolless assembly of multiple poles at point of use or factory configured 2- and 3-pole units to meet popular stocking requirements.

Optional see-through cover enhances safety with IP20 finger-safe protection, lockout/tagout capability and open circuit indication.

DIN-Rail and panel mount versatility allows one product to be used for multiple applications without incurring additional inventory cost.

### Ratings

- Volts
  - 250 V
  - 600 V
- Amps up to 60 A
- SCCR 200 kA RMS Sym.

### Agency information

- Blocks; UL Listed Guide IZLT, File E14853, CSA Certified 47235 — 6225-01
- Covers; UL Listed Guide JDVS, File E58836
- RoHS compliant

### Poles

- 1-, 2-, 3-pole
- Single-pole units snap together to create desired number of poles

### Flammability ratings

- Blocks: UL 94V0, self-extinguishing
- Covers: UL 94HB, self-extinguishing

### Operating and storage temperature range

- Blocks: -40°C to +120°C
- Covers; Non-indicating -40°C to +120°C, Indicating -20°C to +90°C

### Conductors

- 75°C Cu/Al (unless otherwise noted)

### Accessories

- Optional IP20 finger-safe covers in indicating and non-indicating versions. Order one for each pole.
- DIN-Rail end stops, catalog numbers BRKT-ND or BRKT-NDSCRW2.

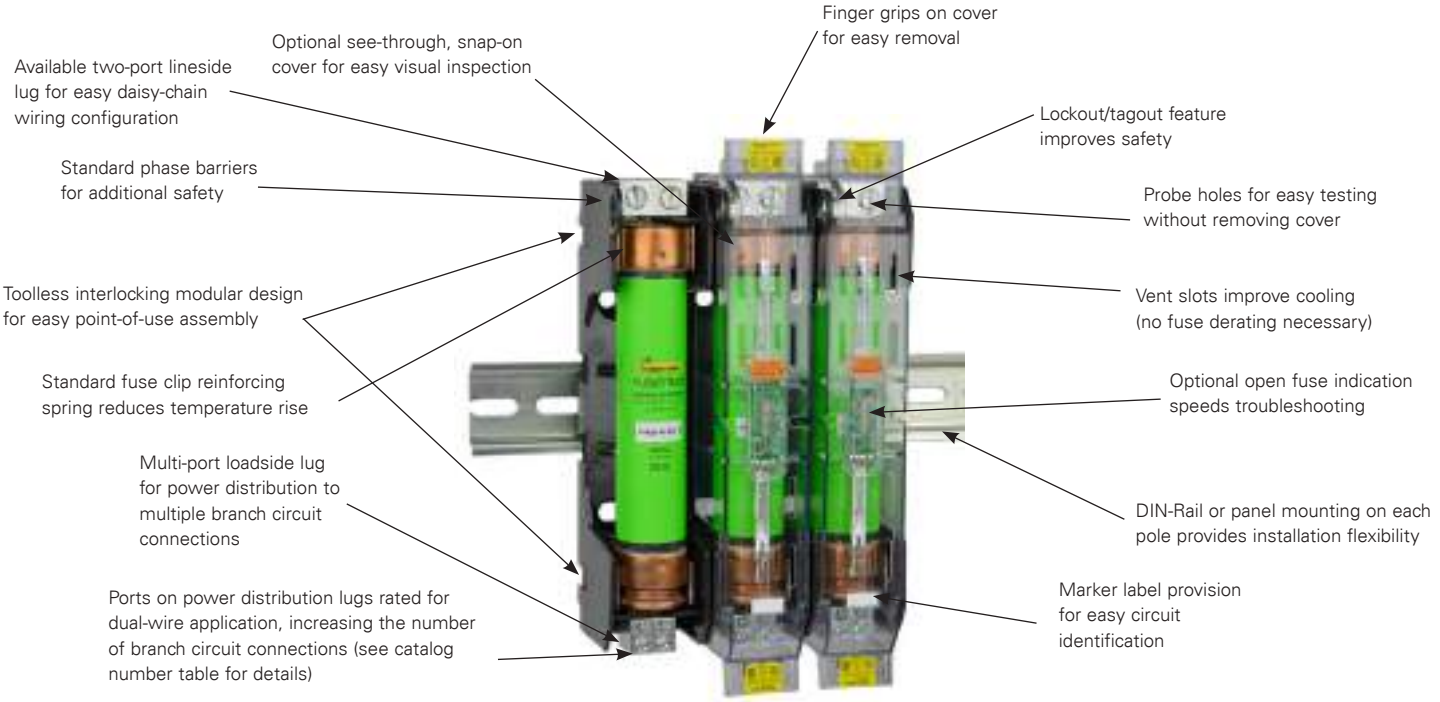


**Data sheet no. 10491**

| Catalog no. | Optional covers* | Fuse amp range | Poles | Lineside (conductors per port) Conductors | Ports/ pole | Torque AWG | N•m (lb-in) | Loadside (conductors per port) Conductors | Ports/ pole | Torque AWG | N•m (lb-in) |
|---|---|---|---|---|---|---|---|---|---|---|---|
| **250 Volts** | | | | | | | | | | | |
| RM25060-1MW12 | N/A | 35 - 60 | 1 | Cu 2-14 Al 2-8 | 2 | 2-4 | 5.6 (50) | Cu 2-14 Al 2-8 | 1 | 2-3 | 5.6 (50) |
| RM25060-2MW12 | | | 2 | | | 6-10 | 4.5 (40) | | | 4-6 | 5.1 (45) |
| RM25060-3MW12 | | | 3 | | | 12-14 | 1.7 (15) | | | 8 | 4.5 (40) |
| | | | | | | | | | | 10-14 | 4.0 (35) |
| RM25060-1MW14 | CVR-RH-25060 CVRI-RH-25060** | | 1 | Cu 2-14 Al 2-8 | 1 | 2-3 | 5.6 (50) | Cu (1) 8-14 Cu (2) 12-14*** Al (1) 8 Str Al (1) 10 Sol | 4 | Cu (1) 8 | 3.4 (30) |
| RM25060-2MW14 | | | 2 | | | 4-6 | 5.1 (45) | | | Cu (1) 10-14 | 2.8 (25) |
| RM25060-3MW14 | | | 3 | | | 8 | 4.5 (40) | | | Cu (2) 12-14 | 3.4 (30) |
| | | | | | | 10-14 | 4.0 (35) | | | Al (1) 8-10 | 3.4 (30) |
| RM25060-1MW24† | N/A | | 1 | Cu 2-14 Al 2-8 | 2 | 2-4 | 5.6 (50) | Cu (1) 8-14 Cu (2) 12-14*** Al (1) 8 Str Al (1) 10 Sol | 4 | Cu (1) 8 | 3.4 (30) |
| RM25060-2MW24† | | | 2 | | | 6-10 | 4.5 (40) | | | Cu (1) 10-14 | 2.8 (25) |
| RM25060-3MW24† | | | 3 | | | 12-14 | 1.7 (15) | | | Cu (2) 12-14 | 3.4 (30) |
| | | | | | | | | | | Al (1) 8-10 | 3.4 (30) |
| **600 Volts** | | | | | | | | | | | |
| RM60030-1MW14† | N/A | up to 30 | 1 | Cu 2-14 Al 2-8 | 1 | 2-3 | 5.6 (50) | Cu (1) 8-14 Cu (2) 12-14*** Al (1) 8 Str Al (1) 10 Sol | 4 | Cu (1) 8 | 3.4 (30) |
| RM60030-2MW14† | | | 2 | | | 4-6 | 5.1 (45) | | | Cu (1) 10-14 | 2.8 (25) |
| RM60030-3MW14† | | | 3 | | | 8 | 4.5 (40) | | | Cu (2) 12-14 | 3.4 (30) |
| | | | | | | 10-14 | 4.0 (35) | | | Al (1) 8-10 | 3.4 (30) |
| RM60060-1MW12 | CVR-RH-60060 CVRI-RH-60060** | 35-60 | 1 | Cu 2-14 Al 2-8 | 2 | 2-4 | 5.6 (50) | Cu 2-14 Al 2-8 | 1 | 2-3 | 5.6 (50) |
| RM60060-2MW12 | | | 2 | | | 6-10 | 4.5 (40) | | | 4-6 | 5.1 (45) |
| RM60060-3MW12 | | | 3 | | | 12-14 | 1.7 (15) | | | 8 | 4.5 (40) |
| | | | | | | | | | | 10-14 | 4.0 (35) |
| RM60060-1MW14 | | | 1 | Cu 2-14 Al 2-8 | 1 | 2-3 | 5.6 (50) | Cu (1) 8-14 Cu (2) 12-14*** Al (1) 8 Str Al (1) 10 Sol | 4 | Cu (1) 8 | 3.4 (30) |
| RM60060-2MW14 | | | 2 | | | 4-6 | 5.1 (45) | | | Cu (1) 10-14 | 2.8 (25) |
| RM60060-3MW14 | | | 3 | | | 8 | 4.5 (40) | | | Cu (2) 12-14 | 3.4 (30) |
| | | | | | | 10-14 | 4.0 (35) | | | Al (1) 8-10 | 3.4 (30) |
| RM60060-1MW24† | | | 1 | Cu 2-14 Al 2-8 | 2 | 2-4 | 5.6 (50) | Cu (1) 8-14 Cu (2) 12-14*** Al (1) 8 Str Al (1) 10 Sol | 4 | Cu (1) 8 | 3.4 (30) |
| RM60060-2MW24† | | | 2 | | | 6-10 | 4.5 (40) | | | Cu (1) 10-14 | 2.8 (25) |
| RM60060-3MW24† | | | 3 | | | 12-14 | 1.7 (15) | | | Cu (2) 12-14 | 3.4 (30) |
| | | | | | | | | | | Al (1) 8-10 | 3.4 (30) |

* Order one cover per pole.
** With open fuse indication. 90 V minimum and closed circuit required for illumination.
*** Dual wire rated lugs with same wire size and stranding.
† Rated for use with 75°C/90°C Cu/Al conductors.

## CH _ _ J _ Class J fuse holder

The CH_J_ Class J fuse holders are available in 30 and 60 amp ratings featuring IP20 finger-safe construction that can be either DIN-Rail or panel mounted. Available as factory configured 1-, 2- or 3-pole holders they are available with optional open fuse indication to speed troubleshooting.

30 A 60 A

### Ratings

- Volts 600 V (or less)
- Amps
  - 30 A
  - 60 A
- SCCR 200 kA

### Agency information

- UL Listed, Guide IZLT, File E14853, UL 4248/CSA 22.2 No. 4248.P, CE

### Conductors

- Single 1-18 AWG and dual 3-18 AWG Cu solid and stranded conductors

### Terminal torque ratings

- 10-18 AWG 24 lb-in
- 1-8 AWG 35 lb-in

### Storage and operating temperature range*

- -20°C to +75°C

* For fuse selection on applications above or below 25°C, consult derating charts in the Bussmann Division publication no. 3002 "Selecting Protective Devices" (SPD).

### Flammability rating UL 94V0

### Features

- Choice of local fuse indication; *easy*ID™ viewing window (for seeing indicator on LPJ-SPI indicating fuse) or neon lamp
- Versatile 1-, 2- and 3-pole versions for 0-30 A and 35-60 A fuses with dual wire rated connections simplify wiring
- Improved electrical safety with IP20 finger-safe construction with lock-out/tag-out feature. 3-phase fuse extraction assures all phases are opened for service work
- Flexible panel/35mm DIN-Rail mounting

| Dimensions — mm | | | | |
|---|---|---|---|---|
| **Fuse amps** | **Poles** | **W** | **D** | **H** |
| Up to 30 A | 1 | 32 | 70 | 115 |
| | 2 | 64 | | |
| | 3 | 96 | | |
| 35-60 A | 1 | 40 | 83 | 125 |
| | 2 | 80 | | |
| | 3 | 120 | | |

| Catalog no. | | | | | | | | |
|---|---|---|---|---|---|---|---|---|
| **Without indication*** | **With indication**** | **Poles** | **Amps** | **Volts (AC/DC)** | **IP20 finger-safe** | **AWG Cu wire range** | **Padlockable** | **Mounting** |
| CH30J1 | CH30J1I | 1 | 30 | 600 | Yes | Single 1-18, dual 3-18 | Yes | 35mm DIN/ panel |
| CH30J2 | CH30J2I | 2 | | | | | | |
| CH30J3 | CH30J3I | 3 | | | | | | |
| CH60J1 | CH60J1I | 1 | 60 | 600 | Yes | Single 1-18, dual 3-18 | Yes | 35mm DIN/ panel |
| CH60J2 | CH60J2I | 2 | | | | | | |
| CH60J3 | CH60J3I | 3 | | | | | | |

* Local fuse indication 6 amps and above possible using Bussmann series LPJ_SPI permanent indication fuses.
**Neon indication non-fuse dependent, minimum voltage 90 V.

**Data sheet no. 2144**

## JT(N)60030 and JT(N)60060 Safety J™ modular finger-safe Class J fuse holders

The Bussmann series Safety J™ modular fuse holders are available in indicating and non-indicating versions. Finger-safe construction improves electrical safety, while modular construction permits dovetailing the required number of poles* at point of use. DIN-Rail mount provides for easy installation. Optional open fuse indication speeds troubleshooting.

30 A version

60 A version

* JT(N)60030 cannot be dovetailed to JT(N)60060.

### Ratings

- Volts 600 Vac
- Amps
  - Up to 30 A (JT(N)60030)
  - 35–60 A (JT(N)60060)
- SCCR
  - 200 kA RMS Sym.
  - 300 kA self certified using Bussmann series LPJ_SP fuses

### Agency information

- Listed to UL 4248: Guide IZLT, File 14853, CSA Certified: Class 6225-01, File 47235. IP20 per IEC 60529, CE

### Catalog numbers and conductor information

| Holder amps | Catalog no. Non-indicating | Catalog no. Indicating* | 75°C Cu conductor size (AWG) and type | Terminal torque N•m (lb-in) |
|---|---|---|---|---|
| 30 | JT60030 | JTN60030 | 8-18 stranded, single or dual** | 2.26 (20) |
| | | | 10-18 solid, single or dual** | |
| 60 | JT60060 | JTN60060 | 4-14 stranded or solid, single | 5.1 (45) |
| | | | 8-10 stranded, dual** | |

* Indication non-fuse dependent, minimum 90 V.
**Dual wire applications must use conductors of the same size and type.

### Dimensions — in (mm)

### JT60030, JTN60030 Flammability rating: UL 94V0

### Open fuse indication

Min. voltage: 90 V; neon lamp "ON" when fuse opens, voltage source and current path are present.

### Features

- 300 kA SCCR with Bussmann series LPJ_SP fuses
- Rapid, flexible 35mm DIN-Rail mounting
- One piece interlocking design for assembling multiple pole blocks reduces inventory costs
- Removable fuse carrier allows fuse replacement away from base while maintaining finger-safe rating

### Typical applications

- Industrial controls
- Process controls
- Small horsepower VFDs

### Dimensions — in (mm)

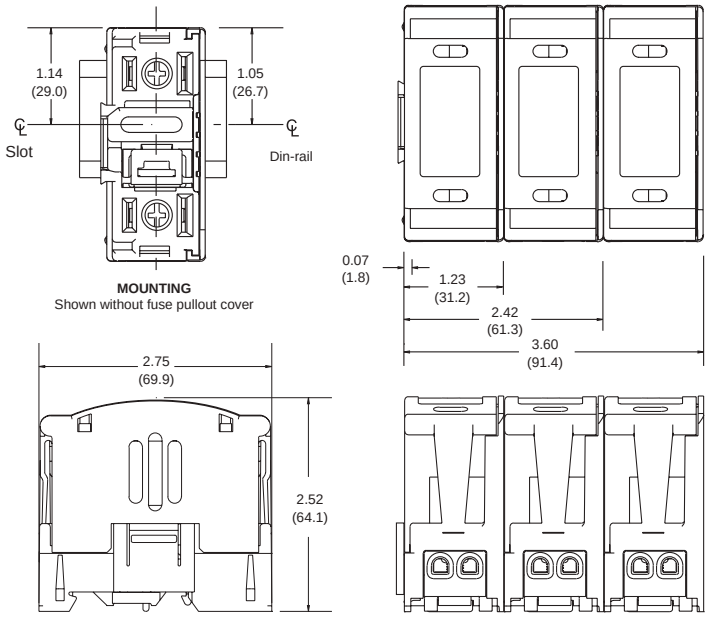


JT(N)60030

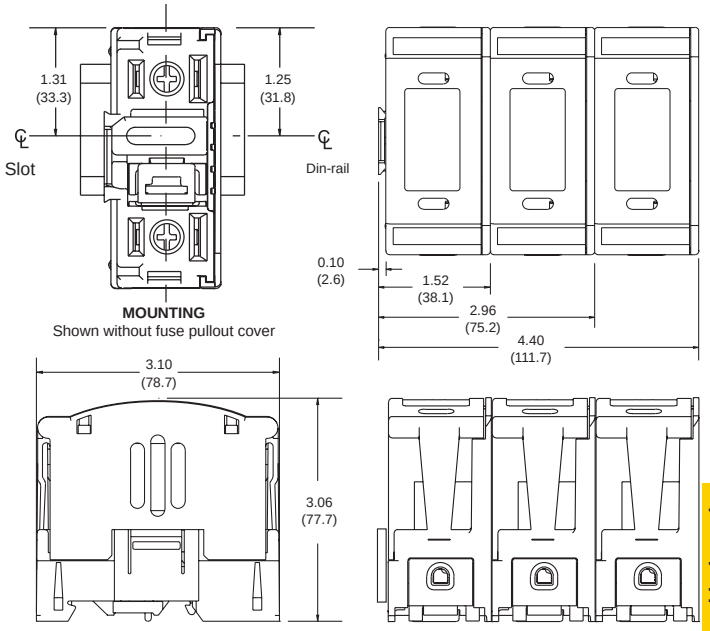


JT(N)60060



Data sheet no. 1152

## JP pyramid style 3-pole Class J fuse block

The Bussmann series JP (pyramid) open fuse block provides a means of mounting a three-pole 30 amp Class J fuse block with a footprint that is narrower than traditional solutions. See catalog numbers for terminals and conductor information.

### Ratings

Volts 600 V

Amps 30 A

SCCR 200 kA RMS Sym.

### Agency information

- UL Listed, UL 4248, Guide IZLT, File E14853, CSA Certified, C22.2 No. 39, Class 4225-04, File 47235, CE

### Flammability rating UL 94V0

### Mounting

- Panel
- 35mm DIN-Rail*

* To order DIN-Rail, specify catalog number DRL35MMLO (1 meter).

| | Mounting | | Terminals/AWG wire range/ type | |
|---|---|---|---|---|
| Catalog no. | Panel | DIN-Rail* | Pressure plate | Box lug |
| JP60030-3PR | Yes | No | 10-14 Cu | — |
| JP60030-3CR | Yes | No | — | 2-14 Cu/Al |
| JP60030-3COR | Yes | No | — | 2-14 Cu |
| JP60030-3PRA | No | Yes | 10-14 Cu | — |
| JP60030-3CRA | No | Yes | — | 2-14 Cu/Al |
| JP60030-3CORA | No | Yes | — | 2-14 Cu |

* Requires adapter, order catalog number JPA-3.

### Dimensions — in

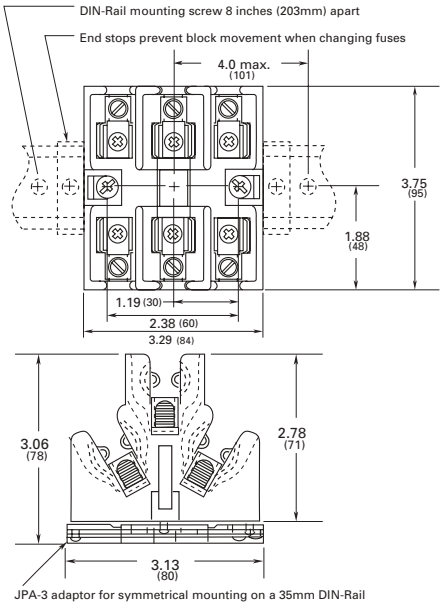


### Data sheet no. 1108

## JM modular Class J fuse blocks

RoHS 2011/65/EU

Class J modular fuse blocks enhance safety for any panel or electrical system design and are available for the full Class J fuse amp range.

All blocks are available as single-pole versions that snap together at point of use, or as factory configured 2-, and 3-pole versions.

All blocks are equipped with a fuse clip reinforcing spring to minimize temperature rise while maintaining reliable surface contact between the fuse and clip over the block's service life.

30 and 60 amp blocks are DIN-Rail and panel mount. Optional covers increase safety.

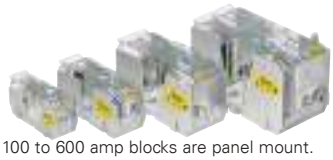

100 to 600 amp blocks are panel mount. Optional covers increase safety.

Ferrule fuse blocks up to 60 amps have the smallest width dimension on the market and feature DIN-Rail or panel mount versatility. Easy circuit identification is available for 30 and 60 amp blocks and covers with universal marker labels.

Knifeblade fuse blocks from 100 to 600 amps feature phase barriers for additional safety with up to four mounting holes per pole for increased installation flexibility. All knifeblade blocks meet UL creep and clearance requirements for Industrial Power Circuits (UL 508 and UL 845). The 200 to 600 amp blocks also meet the higher UL creep and clearance requirements for Power Distribution Standards (UL 98, UL 67, UL 489, UL 891 and UL 869A)

All blocks have optional IP20 finger-safe high clarity, see-through covers for inspecting wire terminations or thermography measurements without removal. All covers enhance safety by featuring probe holes for easier, safer testing and a lockout/tagout capability. These covers also have optional open fuse indication to speed troubleshooting.

### Ratings

- Volts 600 V
- Amps up to 600 A
- SCCR 200 kA RMS Sym.

### Agency information

- Blocks; UL Listed E14853 — IZLT and IZLT7, CSA Certified 47235-6225-01, CE, RoHS Compliant
- Covers; UL Listed E58836 - JDVS, CSA Certified 47235-6225-01 (30 and 60 A), RoHS Compliant

### Poles

- 1-, 2-, 3-pole units factory assembled
- Single-pole units snap together to create desired number of poles

### Flammability ratings

- Blocks: UL 94V0, self-extinguishing
- Covers: UL 94HB, self-extinguishing

### Operating and storage temperature range

- Blocks -40°C to +120°C
- Covers; non-indicating -40°C to +120°C, indicating -20°C to +90°C*

* Indication requires minimum 90 V and closed circuit to illuminate.

### Conductors

- See catalog numbers for details and torque specifications.

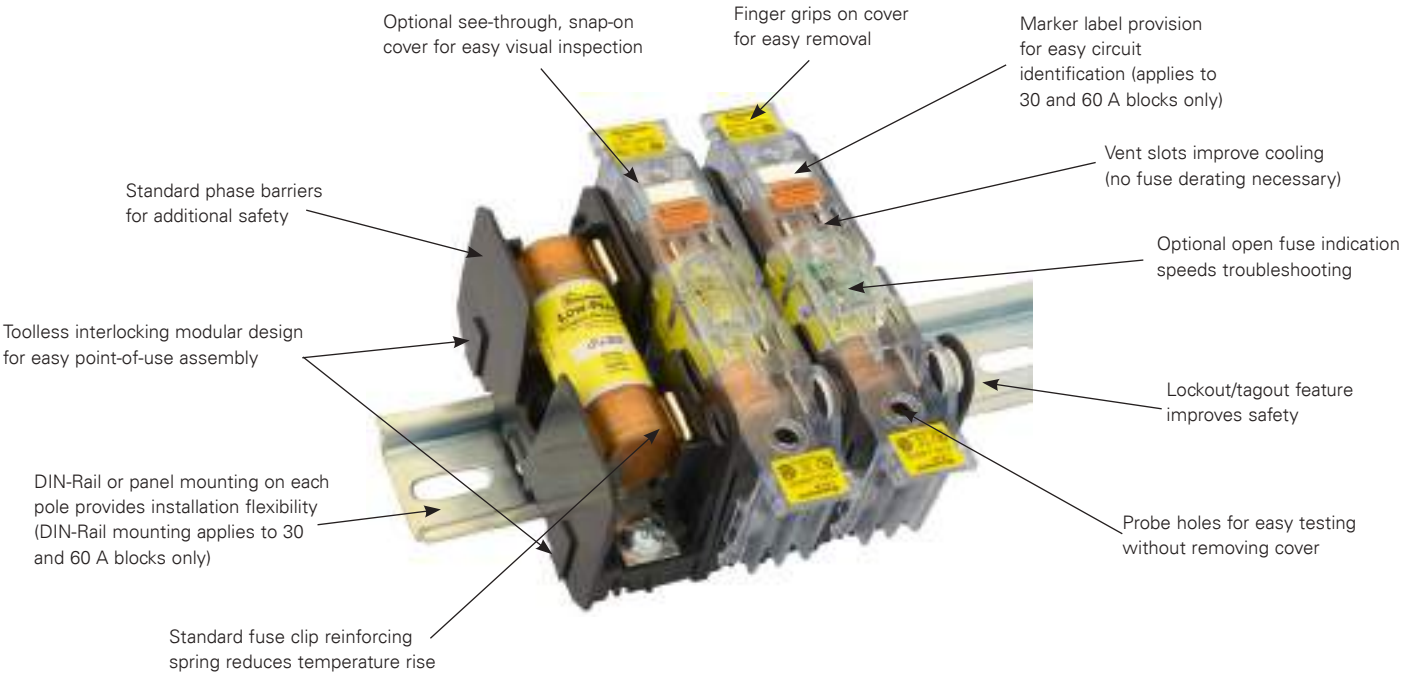

### 30 and 60 amp blocks and covers

| Fuse amp range | Poles | Catalog no./terminal type | | | | Optional covers* | |
|---|---|---|---|---|---|---|---|
| | | Box lug/slot screw | Box lug/hex screw | 10-32 Phil-slot screw | Pressure plate | Indicating** | Non-indicating |
| up to 30 | 1 | JM60030-1CR | JM60030-1CHR | JM60030-1SR | JM60030-1PR | CVRI-J-60030 | CVR-J-60030 |
| | 2 | JM60030-2CR | JM60030-2CHR | JM60030-2SR | JM60030-2PR | | |
| | 3 | JM60030-3CR | JM60030-3CHR | JM60030-3SR | JM60030-3PR | | |
| 35 to 60 | 1 | JM60060-1CR | JM60060-1CHR | — | — | CVRI-J-60060 | CVR-J-60060 |
| | 2 | JM60060-2CR | JM60060-2CHR | | | | |
| | 3 | JM60060-3CR | JM60060-3CHR | | | | |

* Covers sold separately, one cover per pole.
**Open fuse indication requires 90 volts minimum and closed circuit to operate.

### 30 and 60 amp block terminals and conductors

| Terminal type | AWG type/range | AWG | Torque N•m (lb-in) |
|---|---|---|---|
| Box lug | 75°C Cu 2-14, Al 2-8 | 2-3 | 5.6 (50) |
| | | 4-6 | 5.1 (45) |
| | | 8 | 4.5 (40) |
| | | 10-14 | 4.0 (35) |
| 10-32 Phil-slot screw | 75/90°C Cu 10-18 | 10-18 | 2.3 (20) |
| Pressure plate | | | |

### 100 to 600 amp knifeblade blocks and covers

| Fuse amp range | Poles | Catalog no. | Optional covers* | | Conductors*** | | |
|---|---|---|---|---|---|---|---|
| | | | Non-indicating | Indicating** | Solid and stranded | Fine stranded | Torque N•m (lb-in) |
| 70-100 | 1 | JM60100-1CR | CVR-J-60100-M | CVRI-J-60100-M | — | Cu 1-3 AWG | 6.2 (55) |
| | | | | | 1/0-3 AWG; (2) Cu 4-6 AWG | Cu 4-6 AWG | 5.6 (50) |
| | 2 | JM60100-2CR | | | 2 4-6 AWG; (2) Cu 8 AWG | Cu 8 AWG | 5.1 (45) |
| | | | | | 8 AWG; (2) Cu 10-14 AWG | — | 4.5 (40) |
| | 3 | JM60100-3CR | | | Cu 10-14 AWG; Al 10-12 AWG | — | 4.0 (35) |
| 110-200 | 1 | JM60200-1CR | CVR-J-60200-M | CVRI-J-60200-M | 250kcmil-1 AWG | Cu 3/0-1 AWG | 42 (375) |
| | 2 | JM60200-2CR | | | 2-6 AWG; (2) Cu 2-6 AWG | Cu 2-6 AWG | 31 (275) |
| | 3 | JM60200-3CR | | | | | |
| 225-400 | 1 | JM60400-1CR | CVR-J-60400-M | CVRI-J-60400-M | 600kcmil | N/A | 57 (500) |
| | 2 | JM60400-2CR | | | 500kcmil-4 AWG | | 51 (450) |
| | 3 | JM60400-3CR | | | (2) Cu 3/0 - 4 AWG | | 57 (500) |
| | 1 | JM60400-1MW22 | | | | | |
| | 2 | JM60400-2MW22 | | | (2) Al 3/0 - 4 AWG | | 34 (300) |
| | 3 | JM60400-3MW22 | | | | | |
| 450-600 | 1 | JM60600-1CR | CVR-J-60600 | CVRI-J-60600 | 2 (2) 500kcmil-4 AWG | N/A | 51 (450) |
| | 2 | JM60600-2CR | | | | | |
| | 3 | JM60600-3CR | | | | | |

* Covers sold separately.
** Open fuse indication requires 90 volts minimum and closed circuit to operate.
*** Ratings for copper and aluminum conductors except where otherwise noted.

**Data sheet no. 10488**

## JM modular Class J power distribution fuse blocks

RoHS 2011/65/EU

The patented Class J power distribution fuse blocks use fewer wire connections to reduce watts loss and overall operating temperature of the panel, while simplifying panel layout. Available in ratings up to 400 amps, they use up to 65 percent less panel space while lowering inventory costs, and reducing installation time and labor by an average of 33 percent.

All blocks are equipped with a fuse clip reinforcing spring to minimize temperature rise while maintaining reliable surface contact between the fuse and clip over the block's service life.

30 and 60 amp blocks.

100, 200 and 400 amp blocks.

Available as snap-together one-pole units for toolless assembly of multiple poles at point of use or factory configured 2- and 3-pole units to meet popular stocking requirements.

The high 200 kA SCCR helps achieve a higher assembly short-circuit current rating (SCCR) for compliance with NEC sections 110.10, 409.110(4), 409.22, 440.4(B), 670.3(A)(4) and 670.5.

30 and 60 amp blocks feature DIN-Rail and panel mount versatility, while 100 to 400 amp blocks are panel mount.

All blocks are available with optional see-through cover to enhance safety with IP20 finger-safe protection, lockout/tagout capability and open circuit indication. See catalog number tables for details.

### Ratings

- Volts 600 V
- Amps up to 400 A
- SCCR 200 kA Sym. RMS

### Agency information

- Blocks; UL Listed, Guide IZLT, File E14853, CSA Certified 47235 — 6225-01
- Covers; UL Listed, Guide JDVS, File E58836
- RoHS compliant

### Poles

- 1-, 2-, 3-pole
- Single-pole units snap together to create desired number of poles

### Mounting

- 30 and 60 amp blocks DIN-Rail and panel mount
- 100, 200 and 400 amp blocks panel mount only

### Flammability ratings

- Blocks, UL 94V0, self-extinguishing
- Covers; UL 94HB, self-extinguishing

### Operating and storage temperature range

- Blocks, -40°C to +120°C
- Covers; non-indicating -40°C to +120°C, indicating -20°C to +90°C

### Conductors

- 75/90°C Cu/Al (unless otherwise noted)

### Accessories

- IP20 finger-safe covers in indicating and non-indicating versions. Order one for each pole.
- DIN-Rail end stops for blocks rated up to 60 amps, catalog numbers BRKT-ND or BRKT-NDSCRW2

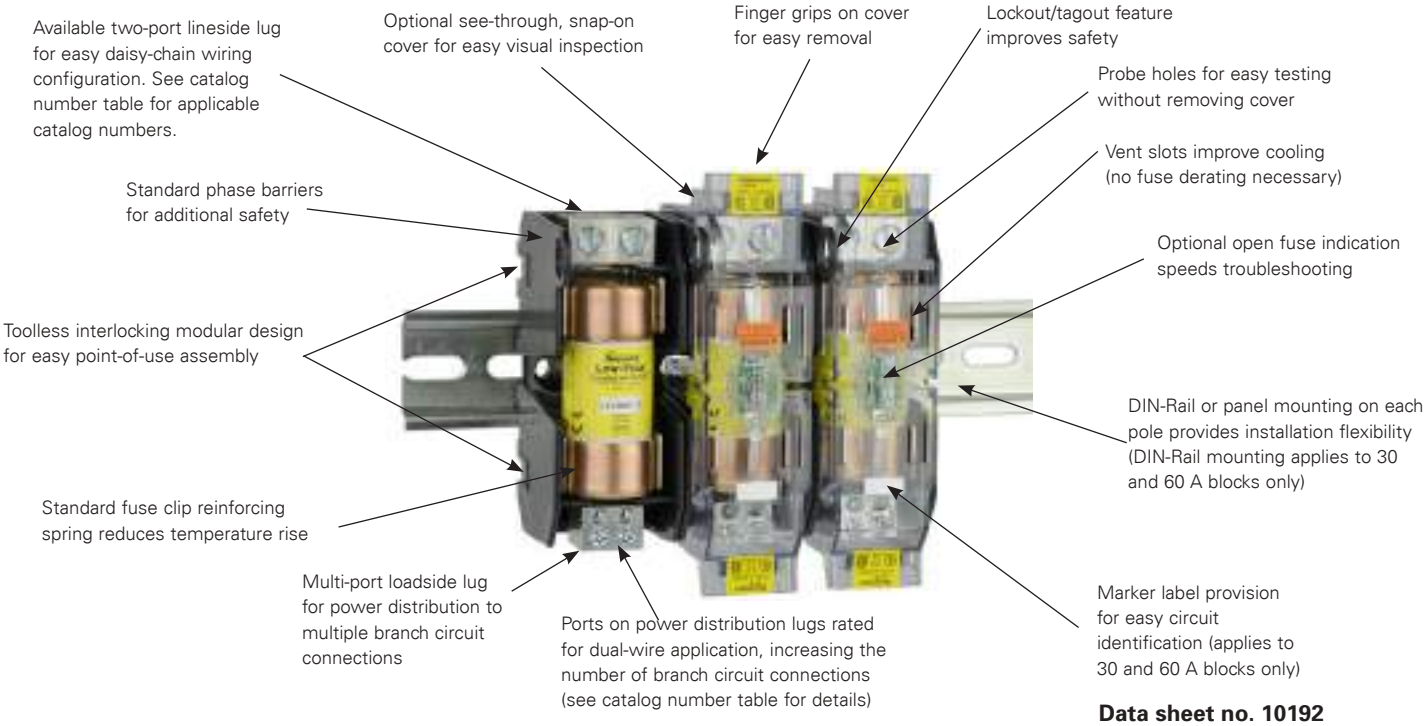


**Data sheet no. 10192**

| Catalog no. | Optional covers* | Fuse amp range | Poles | Lineside (conductors per port) Conductors | Ports/ pole | Torque AWG | N•m (lb-in) | Loadside (conductors per port) Conductors | Ports/ pole | Torque AWG | N•m (lb-in) |
|---|---|---|---|---|---|---|---|---|---|---|---|
| JM60030-1MW14 | N/A | Up to 30 | 1 | Cu 2-14<br>Al 2-8 | 1 | 2-3 | 5.6 (50) | Cu (1) 8-14<br>Cu (2) 12-14***<br>Al (1) 8 Str<br>Al (1) 10 Sol | 4 | Cu (1) 8 | 3.4 (30) |
| JM60030-2MW14 | | | 2 | | | 4-6 | 5.1 (45) | | | Cu (1) 10-14 | 2.8 (25) |
| JM60030-3MW14 | | | 3 | | | 8 | 4.5 (40) | | | Cu (2) 12-14 | 3.4 (30) |
| | | | | | | 10-14 | 4.0 (35) | | | Al (1) 8-10 | 3.4 (30) |
| JM60060-1MW12† | CVR-J-60060<br>CVRI-J-60060** | 35 - 60 | 1 | Cu 2-14<br>Al 2-8 | 2 | 2-4 | 5.6 (50) | Cu 2-14<br>Al 2-8 | 1 | 2-3 | 5.6 (50) |
| JM60060-2MW12† | | | 2 | | | 6-10 | 4.5 (40) | | | 4-6 | 5.1 (45) |
| JM60060-3MW12† | | | 3 | | | 12-14 | 1.7 (15) | | | 8 | 4.5 (40) |
| | | | | | | | | | | 10-14 | 4.0 (35) |
| JM60060-1MW14† | | | 1 | Cu 2-14<br>Al 2-8 | 1 | 2-3 | 5.6 (50) | Cu (1) 8-14<br>Cu (2) 12-14***<br>Al (1) 8 Str<br>Al (1) 10 Sol | 4 | Cu (1) 8 | 3.4 (30) |
| JM60060-2MW14† | | | 2 | | | 4-6 | 5.1 (45) | | | Cu (1) 10-14 | 2.8 (25) |
| JM60060-3MW14† | | | 3 | | | 8 | 4.5 (40) | | | Cu (2) 12-14 | 3.4 (30) |
| | | | | | | 10-14 | 4.0 (35) | | | Al (1) 8-10 | 3.4 (30) |
| JM60060-1MW24 | | | 1 | Cu 2-14<br>Al 2-8 | 2 | 2-4 | 5.6 (50) | Cu (1) 8-14<br>Cu (2) 12-14***<br>Al (1) 8 Str<br>Al (1) 10 Sol | 4 | Cu (1) 8 | 3.4 (30) |
| JM60060-2MW24 | | | 2 | | | 6-10 | 4.5 (40) | | | Cu (1) 10-14 | 2.8 (25) |
| JM60060-3MW24 | | | 3 | | | 12-14 | 1.7 (15) | | | Cu (2) 12-14 | 3.4 (30) |
| | | | | | | | | | | Al (1) 8-10 | 3.4 (30) |
| JM60100-1MW14 | CVR-J-60100-M<br>CVRI-J-60100-M** | 70 - 100 | 1 | Cu 1/0-14<br>Al 1/0-12 | 1 | 1/0-3; Cu (2) 4-6 | 5.6 (50) | Cu (1) 4-14<br>Al (1) 4-8<br>Cu (2) 10-14*** | 4 | 4-6 | 4.0 (35) |
| JM60100-2MW14 | | | 2 | | | 4-6; Cu (2) 8 | 5.0 (45) | | | 8 | 2.8 (25) |
| JM60100-3MW14 | | | 3 | | | 8; Cu (2) 10-14 | 4.5 (40) | | | Cu 10-14 | 2.3 (20) |
| | | | | | | 10-14 | 4.0 (35) | | | (2) 10-14 | 3.4 (30) |
| JM60200-1MW16 | CVR-J-60200-M<br>CVRI-J-60200-M** | 110-200 | 1 | Cu/Al (1) 250kcmil-6<br>Cu (2) 2-6 | 1 | 250kcmil-1 | 42 (375) | Cu (1) 4-14<br>Al (1) 4-8<br>Cu (2) 10-14*** | 6 | 4-6 | 4.0 (35) |
| JM60200-2MW16 | | | 2 | | | | | | | 8 | 2.8 (25) |
| JM60200-3MW16 | | | 3 | | | 2-6 | 31 (275) | | | 10-14 | 2.3 (20) |
| | | | | | | | | | | (2) 10-14 | 3.4 (30) |
| JM60400-1MW16 | CVR-J-60400-M<br>CVRI-J-60400-M** | 225-400 | 1 | Cu/Al (1) 600kcmil-4<br>Cu/Al (2) 3/0-4 | 1 | 600kcmil | 57 (500) | Cu (1) 2-14<br>Al (1) 2-8<br>Cu (2) 8-14*** | 6 | 2-3 | 5.6 (50) |
| JM60400-2MW16 | | | 2 | | | 500kcmil-4 | 51 (450) | | | 4-6 | 5.0 (45) |
| JM60400-3MW16 | | | 3 | | | | | | | 8 | 4.5 (40) |
| | | | | | | | | | | (2) 8 | 4.5 (40) |
| | | | | | | Cu (2) 3/0-4<br>Al (2) (3/0-4 | 57 (500) | | | 10-14 | 4.0 (35) |
| | | | | | | | 34 (300) | | | (2) 10-14 | 4.5 (40) |
| JM60400-1MW26 | | | 1 | Cu/Al 350kcmil-6 | 2 | 350kcmil-1 | 42 (375) | Cu (1) 2-14<br>Al (1) 2-8<br>Cu (2) 8-14*** | 6 | 2-3 | 5.6 (50) |
| JM60400-2MW26 | | | 2 | | | | | | | 4-6 | 5.0 (45) |
| JM60400-3MW26 | | | 3 | | | | | | | 8 | 4.5 (40) |
| | | | | | | | | | | (2) 8 | 4.5 (40) |
| | | | | | | 2-6 | 31 (275) | | | 10-14 | 4.0 (35) |
| | | | | | | | | | | (2) 10-14 | 4.5 (40) |

* Order one cover per pole.
** With open fuse indication. 90 V minimum and closed circuit required for illumination.
***Dual wire rated lugs with same wire size and stranding.
† Rated for 75°C Cu/Al conductors. Conductors with higher ratings may be used with appropriate derating.

**Data sheet no. 10192**

## T300 300 volt Class T fuse blocks

Bussmann series T300 fuse blocks are open fuse blocks for use with Class T fuses up to 600 amps in various pole configurations from 1- to 4-poles. T300 blocks use Bussmann series JJN fuses.

### Ratings

- Volts 300 V
- Amps up to 600 A
- SCCR 200 kA RMS Sym.

### Agency information

- UL Listed UL 4248, Guide IZLT, File E14853, CSA Certified, Class 6225-01, File 47235, CE

### Flammability rating UL 94V0

### Features

- Provide 1-, 2-, 3- and 4-pole housing for 300 Vac Class T fuses
- High 200 kA RMS Sym. Short-Circuit Current Rating
- Class T fuse blocks have a small foot print, providing substantial space savings in equipment

### Typical applications

- 300 V or less control systems
- 300 V or less individual control circuits

Catalog numbers

| Catalog no./terminals | | | | | Terminal AWG wire range/type |
|---|---|---|---|---|---|
| Screw | Box lug | Amps | Poles | Fig. | |
| T30030-2SR | T30030-2CR | Up to 30 | 2 | 1 | SR 10-18 Cu<br>CR 6-14 Cu/Al |
| T30030-3SR | T30030-3CR | | 3 | | |
| T30030-4SR | T30030-4CR | | 4 | | |
| T30060-2SR | T30060-2CR | 31-60 | 2 | | CR 2-14 Cu/Al<br>SR 10-18 Cu |
| T30060-3SR | T30060-3CR | | 3 | | |
| T30060-4SR | T30060-4CR | | 4 | | |
| — | T30100-1CR | 61-100 | 1 | 2 | 1/0-8 Cu/Al |
| — | T30100-2CR | | 2 | | |
| — | T30100-3CR | | 3 | | |
| — | T30200-1C | 101-200 | 1 | 3 | 250kcmil-6 Cu/Al |
| — | T30200-3C | | 3 | 4 | |
| — | T30400-1C | 201-400 | 1 | 5 | 600kcmil-2/0 Cu/Al |
| — | T30600-1C | 401-600 | 1 | 6 | (2) 600kcmil-4/0 Cu/Al |

### Dimensions — in

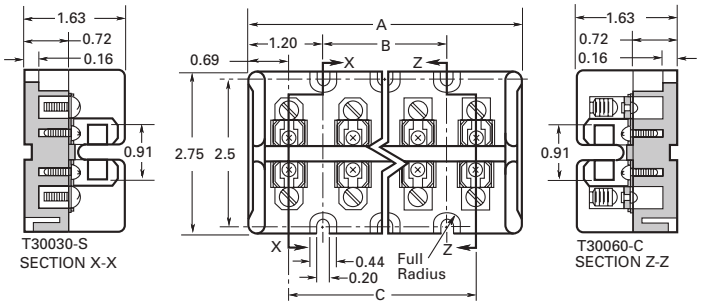


**Figure 1. Up to 60 A**

| | Dimensions — in | | |
|---|---|---|---|
| Catalog no. | A | B | C |
| T30030-2 | 2.41 | — | 1.03 |
| T30060-2 | 2.41 | — | 1.03 |
| T30030-3 | 3.44 | 1.03 | 2.06 |
| T30060-3 | 3.44 | 1.03 | 2.06 |
| T30030-4 | 4.47 | 2.06 | 3.09 |
| T30060-4 | 4.47 | 2.06 | 3.09 |

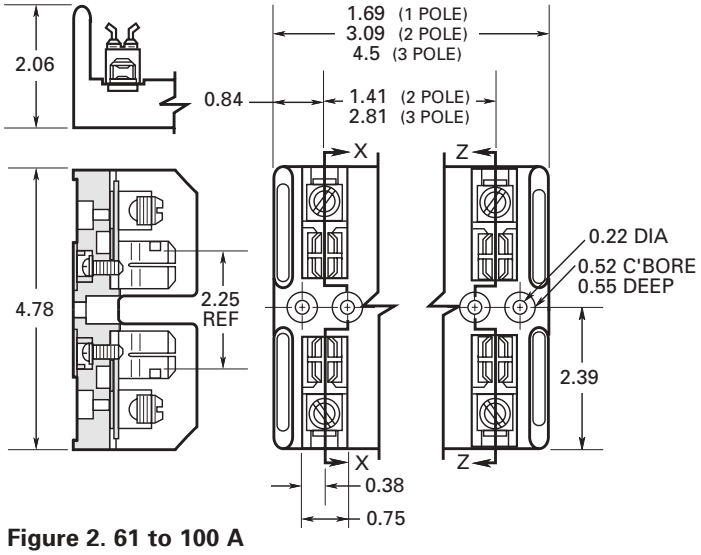


**Figure 2. 61 to 100 A**

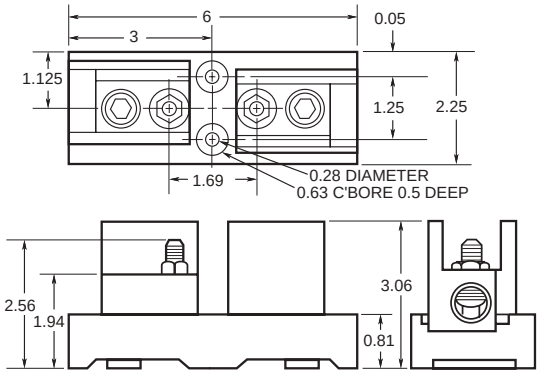


**Figure 3. 101 to 200 A**

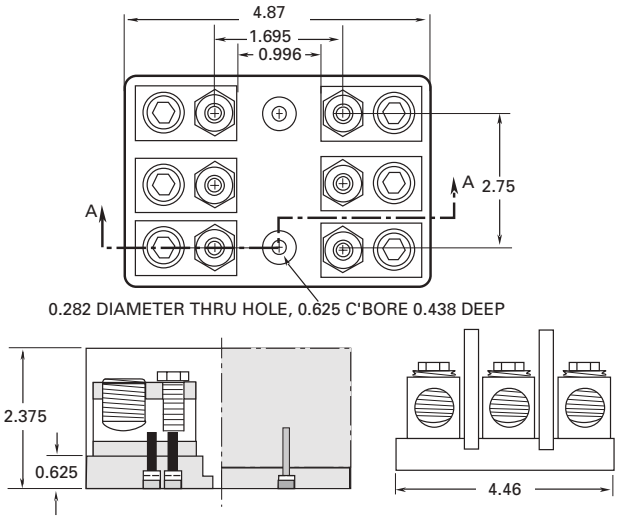


**Figure 4. 200 A**

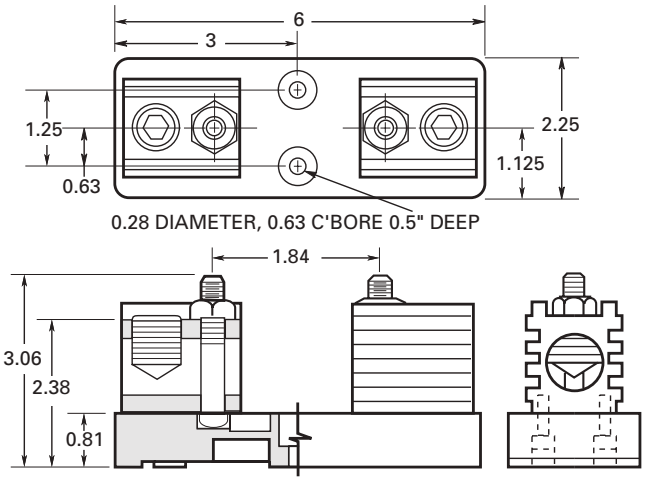


**Figure 5. 201 to 400 A**

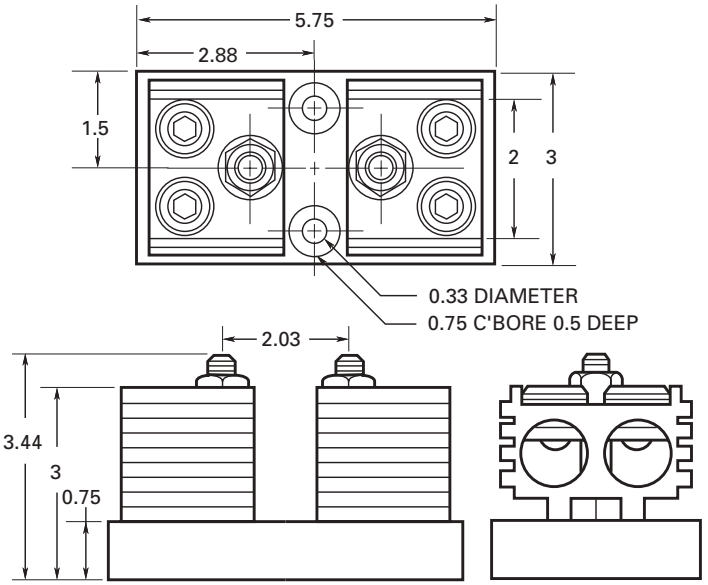


**Figure 6. 401 to 600 A**

**Data sheet no. 1115**

## T600 600 volt Class T fuse blocks

Bussmann series T600 fuse blocks are open fuse blocks for use with Class T fuses up to 600 amps in various pole configurations from 1- to 3-poles. T600 blocks use Bussmann series JJS fuses.

### Ratings

- Volts 600 V
- Amps up to 600 A
- SCCR 200 kA RMS Sym.

### Agency information

- UL Listed, UL 4248, Guide IZLT, File E14853, CSA Certified, Class 6225-01, File 47235, CE

### Flammability rating UL 94V0

### Features

- Provide 1-, 2- and 3-pole housing for 600 Vac Class T fuses.
- High 200 kA RMS Sym. Short-Circuit Current Ratings
- Class T fuse blocks have a small foot print, providing substantial space savings in equipment

### Typical applications

- 600 V or less control systems
- 600 V or less individual control circuits

| Catalog no./terminals | | | | | Terminal AWG |
|---|---|---|---|---|---|
| Screw | Box lug | Amps | Poles | Fig. | range/type |
| T60030-1SR | T60030-1CR | Up to 30 | 1 | 1 | SR 10-18 Cu CR 2-14 Cu/Al |
| T60030-2SR | T60030-2CR | | 2 | | |
| T60030-3SR | T60030-3CR | | 3 | | |
| T60060-1SR | T60060-1CR | 31-60 | 1 | 2 | SR 10-18 Cu CR 2-14 Cu/Al |
| T60060-2SR | T60060-2CR | | 2 | | |
| T60060-3SR | T60060-3CR | | 3 | | |
| — | T60100-1C | 61-100 | 1 | 3 | 2/0-14 Cu/Al |
| — | T60100-2C | | 2 | | |
| — | T60100-3C | | 3 | | |
| — | T60200-1C | 101-200 | 1 | 4 | 250kcmil-6 Cu/Al |
| — | 1B0089* | | 3 | 5 | |
| — | T60400-1C | 201-400 | 1 | 6 | 600kcmil-2/0 Cu/Al |
| — | T60600-1C | 401-600 | 1 | 7 | (2) 600kcmil-4/0 Cu/Al |

* UL Listed, Guide IZLT, File E14853, CSA Certified Class 6225-01, File 21455M18.

### Dimensions — in

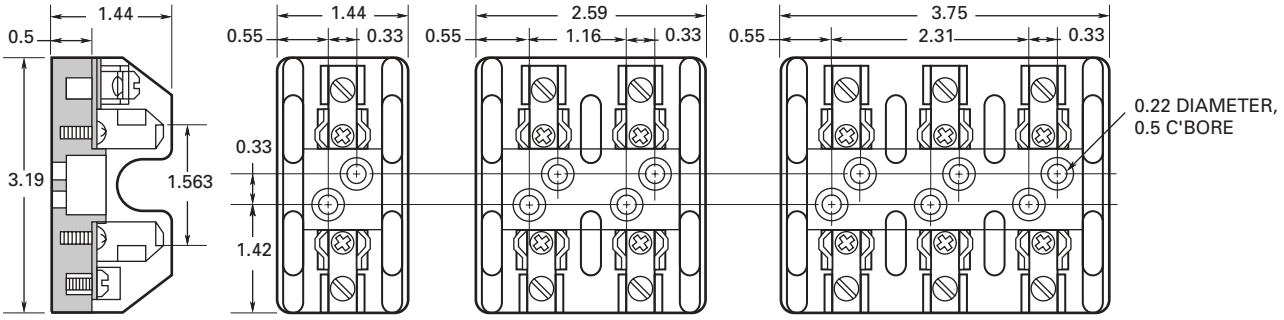


**Figure 1. Up to 30 A**

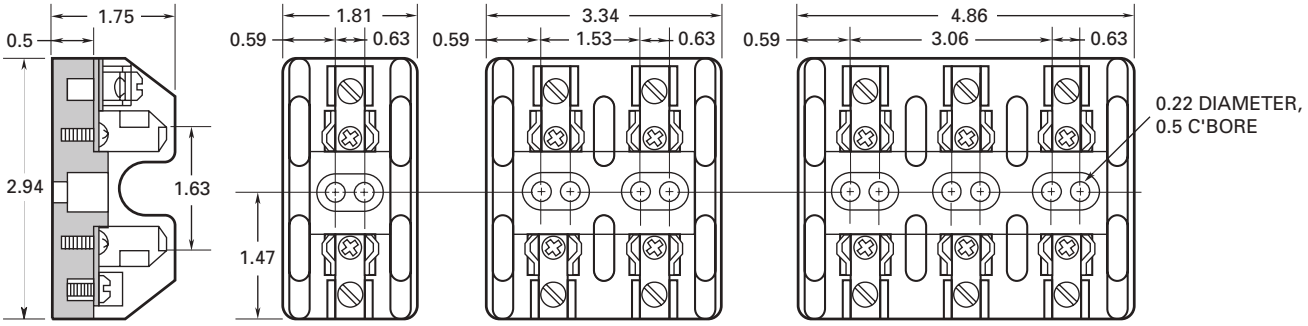


**Figure 2. 31 to 60 A**



**Data sheet no. 1116**

**Dimensions — in**

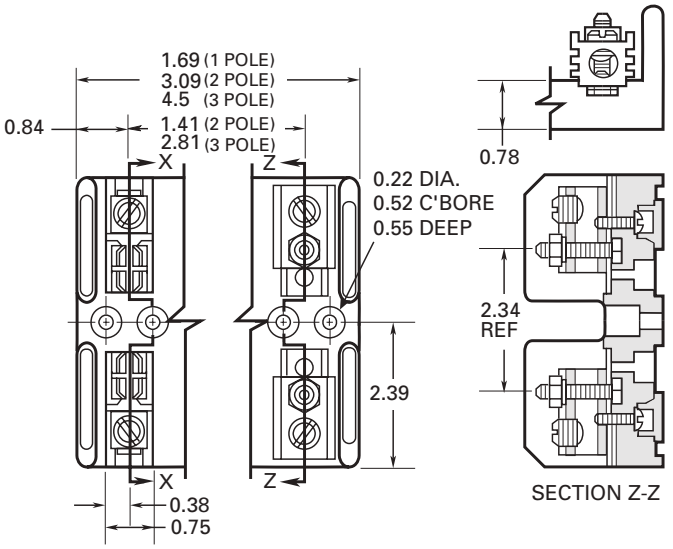


**Figure 3. 61 to 100 A**

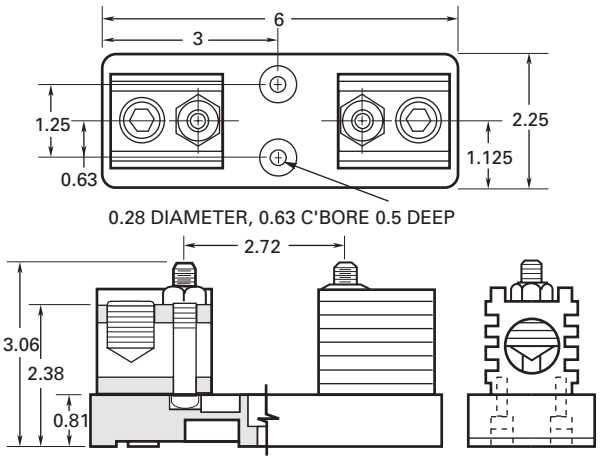


**Figure 6. 201 to 400 A**

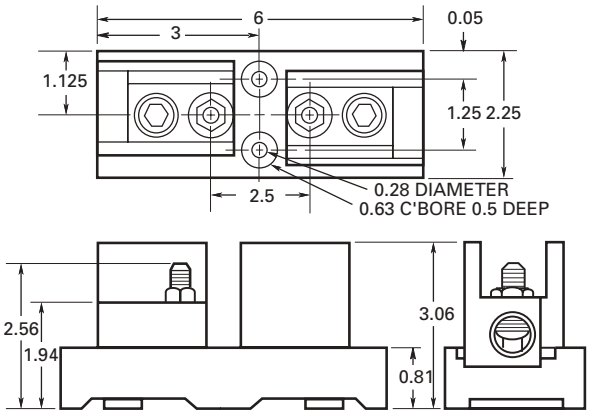


**Figure 4. 101 to 200 A (T60200-1C)**

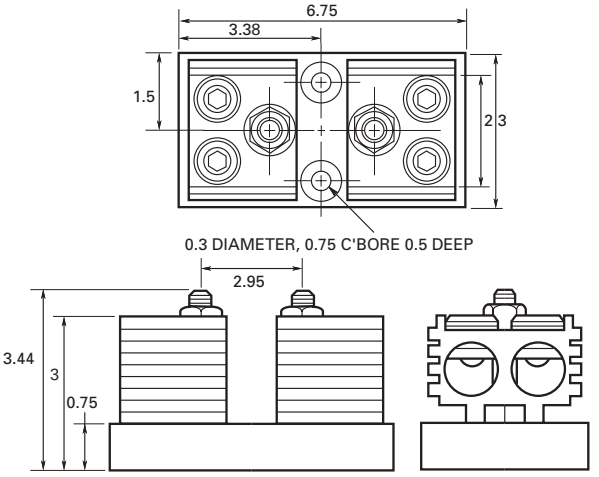


**Figure 7. 401 to 600 A**

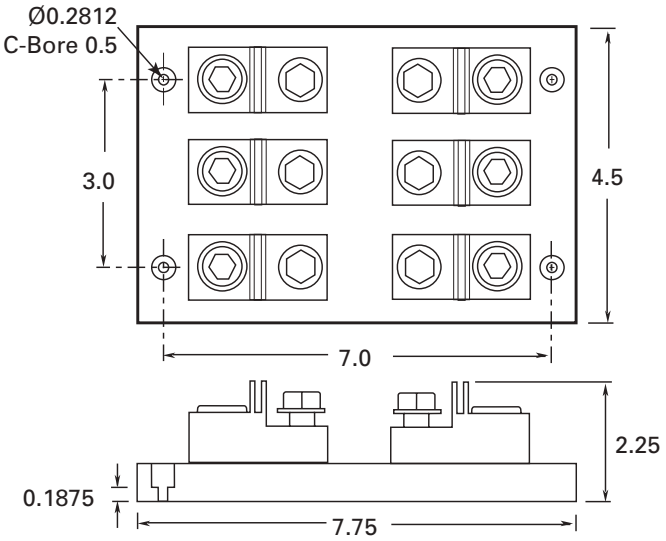


**Figure 5. 101 to 200 A (1B0089)**

**Data sheet no. 1116**

## Modular open-center fuse blocks

### BH modular type

BH modular fuse blocks are for use with various blade and ferrule (cylindrical) Bussmann series high speed, and Class J and T fuses.

See the data sheets referenced in the catalog number table for block/fuse compatibility.

### Ratings

- Volts 700 V
- Amps
  - BH-0xxx 100 A
  - BH-1xxx and BH-2xxx 400 A
  - BH-3xxx 700 A
- SCCR 200 kA RMS Sym. or fuse IR, whichever is lower

### Agency information

- UL Recognized, Guide EZLT2, File No. E14853 up to 700 V, CSA Certified, Class 6225-01, File No. 47235 up to 700 V, RoHS compliant, CE

### Features

- A wide range of mounting configurations
- High Short-Circuit Current Rating (SCCR) based upon installed fuse up to 200 kA RMS Sym.

### Typical applications

- Solid state control circuits
- VFDs
- UPS systems

Refer to the data sheet numbers below for the catalog code description information.

| Cat no. | Data sheet | Cat no. | Data sheet | Cat no. | Data sheet | Cat no. | Data sheet |
|---|---|---|---|---|---|---|---|
| BH-0001 | 1200 | BH-1001 | 1201 | BH-2001 | 1202 | BH-3003 | 1203 |
| BH-0002 | | BH-1002 | | BH-2002 | | BH-3004 | |
| BH-0003 | | BH-1003 | | BH-2003 | | BH-3033 | |
| BH-0111 | | BH-1131 | | BH-2031 | | BH-3144 | |
| BH-0112 | | BH-1132 | | BH-2032 | | BH-3145 | |
| BH-0113 | | BH-1133 | | BH-2033 | | | |
| BH-0121 | | | | | | | |
| BH-0122 | | | | | | | |

**Data sheet no. 1200 (BH-0), 1201 (BH-1), 1202 (BH-2), 1203 (BH-3)**

### C5268 stud type

The simpler design is the C5268 modular fuse block. With this design, the fuse terminal and cable (with termination) are mounted on the same stud, minimizing labor needed for installation. The stud type block is available in the configurations shown in the table below.

| Catalog no. | Max fuse amp rating | Stud |
|---|---|---|
| C5268-1 | 200 | 5/16-18 x 1" |
| C5268-2 | | 5/16-18 x 1-3/4" |
| C5268-3 | | 5/16-18 x 3/4" |
| C5268-4 | 100 | 1/4-20 x 1" |
| C5268-5 | | 1/4-20 x 1-3/4" |

### 1BS10x connector type

Eaton's Bussmann series also offers a modular style fuse block that utilizes a tin-plated connector for wire termination and heat dissipation) with a plated-steel stud for fuse mounting. The connector type fuse block is available in the RoHS compliant configurations shown below. Consult your Bussmann series product representative for additional product details.

| Catalog no. | Max rated voltage | Max fuse amp rating |
|---|---|---|
| 1BS101 | 600 | 100 |
| 1BS102 | | 400 |
| 1BS103 | | |
| 1BS104 | | 600 |

**Data sheet no. 1206 (1BS101), 1207 (1BS102), 1208 (1BS103), 1209 (1BS104)**

## SD and TD blocks for NH size fuses

1-pole SD and 3-pole TD fuse blocks for NH fuse sizes 00 to 4 are specifically designed for use with Bussmann series bladed NH fuses. See data sheet 720109 (690 V gG/gL) and 10164 (500 V gG/gL).

For NH 1 to 3 photovoltaic fuse applications, see the single-pole SD-PV blocks in the PV fuse section.

Shown with optional shroud kit

### Ratings

- Volts
  - 690 Vac
  - 1000 Vac (Sd1-D only)
- Amps 160 to 1600 A
- SCCR up to 120 kA

### Agency information

- IEC 60269-1 and 2
- VDE 0636-1 and 2
- RoHS compliant

### Poles

- 1 and 3

### Protection level

- IEC - IP20 with shroud kit installed and shielding of any exposed terminal lugs
- UL - Installation of shroud kit decreases the likelihood of incidental terminal contact. To ensure compliance to IP20 specifications per UL the installer must make additional provisions.

### Temperature range

- Operating -20°C to +70°C
- Storage -40°C to +80°C

### Mounting

- 35mm DIN-Rail
- Panel

### Flammability rating

- UL 94V0

| Catalog no. | Poles | Description | NH fuse size | Amps |
|---|---|---|---|---|
| SD00-D | 1 | NH fuse block | 000 and 00 | 160 |
| TD00-D | 3 | | | |
| TD00-DI* | | | | |
| SD1-D | 1 | | 1 | 250 |
| TD1-D | 3 | | | |
| SD2-D | 1 | | 2 | 400 |
| TD2-D | 3 | | | |
| SD3-D | 1 | | 3 | 630 |
| TD3-D | 3 | | | |
| SD4-D | 1 | | 4 | 1250 |
| SD4-S1600** | | | | 1600 |

* 3-pole integral base molding.
**Panel mount only.

### Accessories

### Fuse extraction handle

| Catalog no. | Size | Amps |
|---|---|---|
| FEH | NH00 to 3 | 160 to 630 |

### Shroud kits

| Catalog no.† | Fuse block | Fuse size | Amps | Description |
|---|---|---|---|---|
| SD12-SK | SD1/TD1 | NH1 | 250 | Includes 2 shrouds and 1 fuse cover |
| SD12-SK | SD2/TD2 | NH2 | 400 | |
| SD3-SK | SD3/TD3 | NH3 | 630 | |

† Order one kit per pole.

### Phase barrier kits

| Catalog no.†† | Fuse block | Fuse size | Amps | Description |
|---|---|---|---|---|
| SD00-PB | SD00/TD00 | NH00 | 160 | 2 phase barriers and 2 ganging links |
| SD12-PB | SD1/TD1 | NH1 | 250 | |
| SD12-PB | SD2/TD2 | NH2 | 400 | |
| SD3-PB | SD3/TD3 | NH3 | 630 | |

††Order one kit per 3-pole assembly.

### Microswitches

| Catalog no. | Ratings |
|---|---|
| BVL50 | 6 A 250 Vac |
| 170H0236 | 2 A 250 Vac |
| 170H0238 | 2 A 250 Vac |

### Neutral links

| Catalog no. | Fuse size | Amps |
|---|---|---|
| SDL-00 | NH00 | 160 |
| SDL-1 | NH1 | 250 |
| SDL-2 | NH2 | 400 |
| SDL-3 | NH3 | 630 |

**Data sheet no. 10163**

## HTB panel mount fuse holders for 5x20mm and 1/4" x 1-1/4" fuses

Panel mount holders with knob-type and screwdriver-type carriers made from high temperature, flame retardant thermoplastic (UL 94V0) and tin-plated brass quick-connect terminals.

Knob-type fuse carrier

Screwdriver-type fuse carrier

RoHS 2011/65/EU

### Ratings*

Volts 250 V

Amps 20 A max*

- Insulation resistance (per IEC #257) 10,000 ohms @ 500 Vdc
- Contact resistance (per IEC #257) 0.005 ohms max @ 1 A
- Standoff voltage (per IEC #257) 480 V/Mil @ 0.125" thickness

* See data sheet 2119 for ratings by holder configuration.

### Agency information

- UL Recognized, Guide IZLT2, File E14853, 1/4" dia. fuse @ 20 A, 5mm dia. fuse @16 A @ 250 V, CSA Class 6225-01 File 47235 @ 16 A @ 250 V, VDE Certified, 136128, HTB-XXM, SEMKO Certification, Ref. 0146149/01, HTB-XXM, RoHS compliant, CE

### Operating temperature range

- -55°C to +85°C

### Mounting

- Rear hex nut; HTB-2_, HTB3_, HTB-4_, HTB-5_
- Front hex nut; HTB-6_
- Snap-in; HTB-8_, HTB-9_

### Splash-proof versions

- Splash-proof versions available by adding "-SP" suffix to the catalog number.

### Catalog numbers and dimensions — in (mm)

| Holder dimensions | Max panel thickness — in (mm) | Solder / 3/16" QC terminal: In-line (0.34 (8.7)) | Solder / 3/16" QC terminal: Rt. angle (0.33 (8.3)) | 1/4" QC terminal: In-line (0.47 (11.9)) | 1/4" QC terminal: Rt. angle (0.45 (11.5)) | Fuse carrier*: 1/4" I = inches | Fuse carrier*: 5mm M = metric |
|---|---|---|---|---|---|---|---|
| **Knob-type carrier — common length 1.69 (43)** | | | | | | | |
| 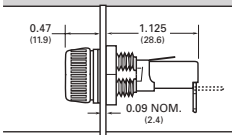 | 0.3 (8) | HTB-22I-R | HTB-24I-R | HTB-26I-R | HTB-28I-R | X | |
| | | HTB-22M-R | HTB-24M-R | HTB-26M-R | HTB-28M-R | | X |
| 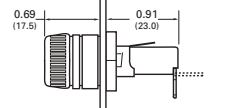 | 0.125 (3) | HTB-42I-R | HTB-44I-R | HTB-46I-R | HTB-48I-R | X | |
| | | HTB-42M-R | HTB-44M-R | HTB-46M-R | HTB-48M-R | | X |
| 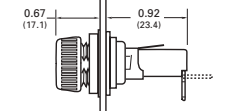 | 0.3 (8) | HTB-62I-R | HTB-64I-R | HTB-66I-R | HTB-68I-R | X | |
| | | HTB-62M-R | HTB-64M-R | HTB-66M-R | HTB-68M-R | | X |
| 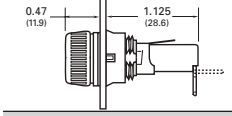 | 0.125 (3) | HTB-82I-R | HTB-84I-R | HTB-86I-R | HTB-88I-R | X | |
| | | HTB-82M-R | HTB-84M-R | HTB-86M-R | HTB-88M-R | | X |
| **Screwdriver-type carrier — common length 1.75 (45)** | | | | | | | |
| 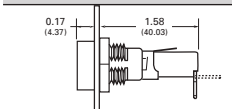 | 0.3 (8) | HTB-32I-R | HTB-34I-R | HTB-36I-R | HTB-38I-R | X | |
| | | HTB-32M-R | HTB-34M-R | HTB-36M-R | HTB-38M-R | | X |
| 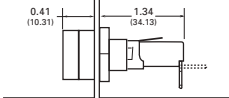 | 0.125 (3) | HTB-52I-R | HTB-54I-R | HTB-56I-R | HTB-58I-R | X | |
| | | HTB-52M-R | HTB-54M-R | HTB-56M-R | HTB-58M-R | | X |
| 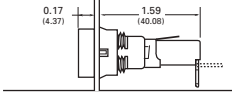 | 0.125 (3) | HTB-92I-R | HTB-94I-R | HTB-96I-R | HTB-98I-R | X | |
| | | HTB-92M-R | HTB-94M-R | HTB-96M-R | HTB-98M-R | | X |

* Fuse carriers may be ordered separately. Specify "FT" for knob-type or "ST" for screwdriver type, followed by "-I" for 1/4" fuses and "-M" for 5mm fuses.

Data sheet no. 2119

## HJL panel mount neon lamp indicating holder for 1/4" x 1" fuses

### Ratings

- Volts 250 V
- Amps 15 A

| Catalog no.* | Volts | Lamp color | Knob type |
|---|---|---|---|
| HJL | 90 to 250 | Clear | Octagonal |

* Use with AGX, MKB, TCP70 and TDC fuses, for panels up to 1/8" thick.

### Dimensions — in (mm)

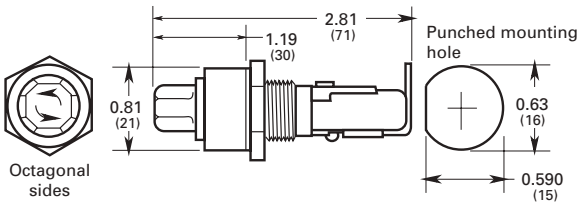


**Data sheet no. 2121**

## HK panel mount neon and incandescent lamp indicating holders for 1/4" x 1" fuses

### Ratings

- Volts 250 V
- Amps
  - 15 A (HKL, HKL-X)
  - 20 A (HKR, HKT, HKU, HKX)

### Agency information

- UL Recognized, Guide IZLT2, File E14853), CSA Certified Class 6225-01, File 47235, CE

| Catalog no. | Lamp volts | Knob color/type |
|---|---|---|
| HKL* | 90-250 | Clear/octagonal |
| HKL-X* | 90-250 | Clear/flat side |
| HKR** | 22-30 | Amber/octagonal |
| HKT** | 13-22 | Amber/octagonal |
| HKU** | 4-6 | Red/octagonal |
| HKX** | 22-33 | Amber/flat side |

* Neon lamp UL Recognized and CSA Certified.
**Incandescent lamp.

### Dimensions — in (mm)

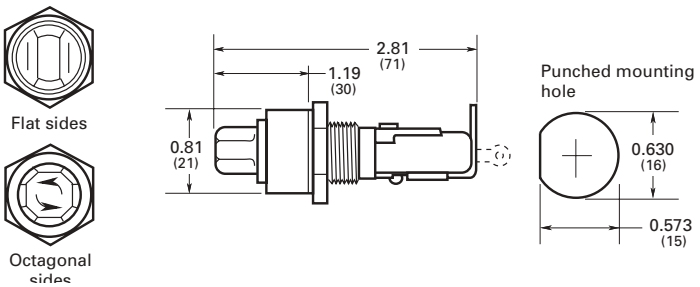


**Data sheet no. 2105**

## HKP panel mount holders for 1/4" x 1-1/4" fuses

Vibration resistant bayonet-type knob holders for panels up to 5/16" thick.

### Ratings

RoHS 2011/65/EU

- Volts 250 V
- Amps up to 30 A*

* See data sheet 2106 for ratings by specific holder.

### Agency information

- UL Recognized Guide IZLT2, File E14853, CSA Certified, Class 6225-01, File 47235, CE (HKP, HKP-L, HKP-W, HKP-OO), RoHS compliant

| Catalog no. | Description |
|---|---|
| HKP-R | Standard fuse holder |
| HKP-L-R | HKP with 2250 V stand-off barrier |
| HKP-W-R | HKP with drip-proof knob |
| HKP-BBHH-R | HKP with 1/4" quick-connects, nut and washer assembled. |
| HKP-HH-R | HKP with 1/4" quick-connect. |
| HKP-LW-HH-R | HKP with drip-proof knob, 2250 V stand-off barrier and 1/4" quick-connects. |
| HKP-OO-R | HKP with snap-lock |

### Replacement parts

| Catalog no. | Description |
|---|---|
| 9435-1/2 | Cap |
| BK/1A4287 | Plastic nut (100 pieces minimum) |
| BK/1A4806-2 | Metal nut (100 pieces minimum) |
| 9732 | Washer |

### Dimensions — in (mm)

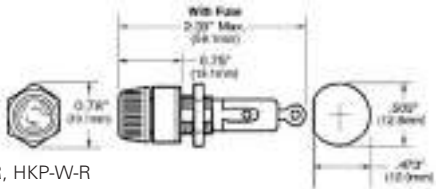

HKP-R, HKP-L-R, HKP-W-R

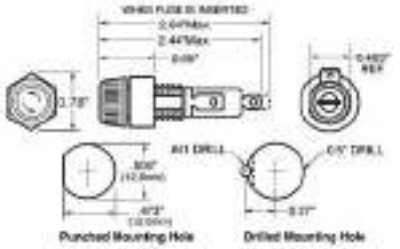


HKP-BBHH-R, HKP-HH-R, HKP-LW-HH-R

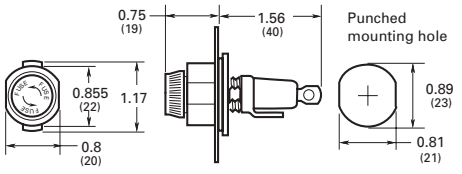


HKP-OO-R

**Data sheet no. 2106**

## HLD panel mount holders for 1/4" x 1-1/4" pin indicating fuses

### Ratings

- Volts 250 V
- Amps 15 A

### Agency information

- UL Recognized, Guide IZLT2, File E14853, CE

| Catalog no.* | Terminals |
|---|---|
| HLD | Solder terminals |
| HLD-HH | 1/4" quick-connect terminals |

* Use with GBA or GLD fuses.

### Dimensions — in (mm)

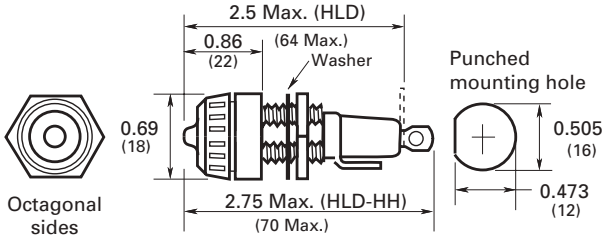


**Data sheet no. 2120**

## HPC-D flange panel mount, solder terminal

10 AWG max holder with screw-type knob for 13/32" x 1-1/2" fuses. Supplied with O-ring and panel gasket

### Ratings

- 600 V, 30 A*

* 20 A max when used with quick-connect terminals.

### Agency information

- UL Recognized, Guide IZLT2, File E14853, CE

### Flammability rating: UL 94HB

| Catalog no. | Description |
|---|---|
| HPC-D | Flange mount in panels up to 1/4" thick. |
| BK/9987SA | Replacement knob, bulk only, 50 pieces |

### Dimensions — in (mm)

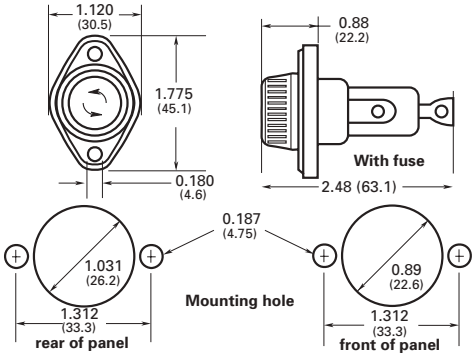


**Data sheet no. 2109**

## HPF panel mount holders with screw-type knobs for 13/32" x 1-5/16" to 1-1/2" fuses

### Ratings*

- Volts up to 600 V
- Amps up to 30 A

* See catalog numbers for ratings by specific holder.

### Agency information

- UL Recognized, Guide IZLT2, File E14853; CSA Certified, Class 6225-01, File 47235, CE

### Flammability rating: UL 94HB

### Terminals

- Combination 1/4" quick-connect/solder** terminals

**Solder terminal 10 AWG wire max.

| Catalog no. | Amps | Volts (AC) | Fuse/description/length |
|---|---|---|---|
| HPF | 30[2] | 600 | 1-1/2" (38mm) |
| HPF-C | 30[3] | 600[3] | Clear knob 1-1/2" (38mm) |
| HPF-L | 5 | 600 | BBS, 1-3/8" fuses. |
| HPF-EE | 15 | 600 | SC Class G up to 15 A, 1-5/16" |
| HPF-JJ | 20 | 600 | SC Class G 20 A, 1-13/32" |
| HPF-FF[1] | 30[2] | 480 | SC Class G 25 and 30 A, 1-5/8" |
| HPF-RR | 30[2] | 600 | FNQ-R, KTK-R, LP-CC, Class CC |
| HPF-WT | 30[2] | 600 | Splash-proof knob. 1-1/2" (38mm) |

1 Not CSA Certified.
2 20 A max when used with quick-connect terminals.
3 HPF-C ratings for CSA: 15 A, 250 V.

### Dimensions — in (mm)

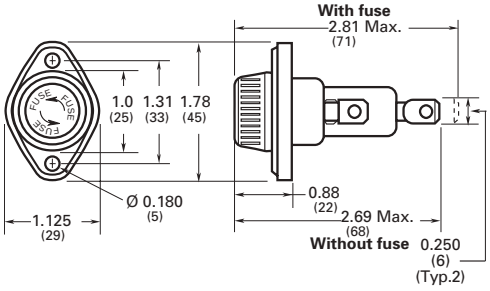


**Data sheet no. 2114**

## HPD and HPG panel mount bayonet-type knob holders for 13/32" x 1-1/2" fuses

### Ratings

- Volts 600 V
- Amps
  - 30 A
  - 15 A (Class G only)

### Agency information

- UL Recognized, Guide IZLT2, File E14853, CE

### Flammability ratings

- Body UL 94V0
- Knob UL 94HB

HPD

HPG, HPG-EE

| Catalog no. | Amps | Volts (AC) | Fuse/description/length |
|---|---|---|---|
| HPD* | 30[1] | 600 | 1-1/2" (38mm) |
| HPG** | | | |
| HPG-EE** | 15 | | SC Class G up to 15 A, 1-5/16" |

* HPD has combination 1/4" quick-connect/solder terminal on loadside (side) terminal only. Lineside (rear) terminal is 3/16" shorter than and is solder only.
**HPG and HPG-EE has combination 1/4" quick-connect/solder terminals on both side (load) and rear (line) terminals.
1 20 A max when used with quick-connect terminals.

### Dimensions — in (mm)

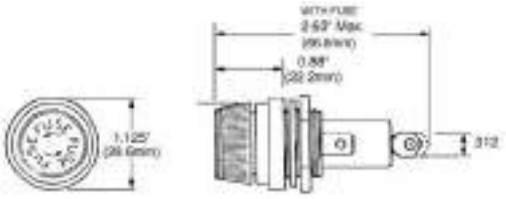

HPD

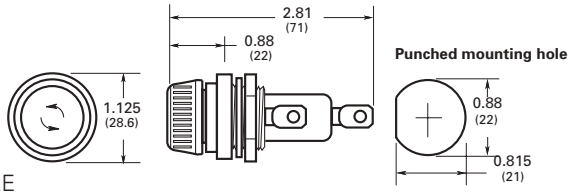


HPG, HPG-EE

## HPM panel mount holders with screw-type knob for 13/32" x 1-1/2" fuses.

### Ratings

Volts 600 V

Amps 30 A*

* 20 A max when used with quick-connect terminals.

### Agency information

- UL Recognized, Guide IZLT2, File E14853; CSA Certified, Class 6225-01, File 47235, CE

### Flammability rating: UL 94HB

| Catalog no. | Description |
|---|---|
| HPM | 1/4" quick-connect/solder |
| HPM-D | Splash-resistant knob** |
| BK/9789-Y2 | Replacement knob, bulk only, 50 pieces |

**HPM-D has 1/4" quick-connect/solder terminal on rear (load) terminal only. The side (line) terminal is 1/4" quick-connect only.

### Nut torque:

- 30 lb-in.

### Dimensions — in (mm)

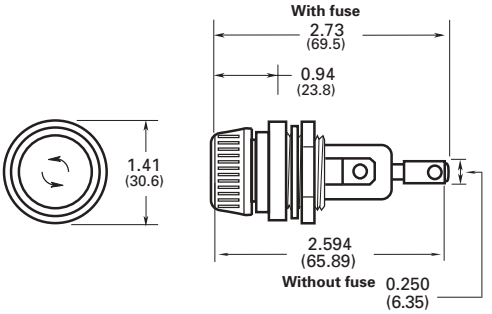


Data sheet no. 2108

Data sheet no. 2112

## HPS panel mount bayonet-type knob holders for 13/32" x 1-5/16" to 1-1/2" fuses

### Ratings*

- Volts up to 600 V
- Amps up to 30 A

* See catalog numbers for ratings by specific holder.

### Agency information

- UL Recognized, Guide IZLT2, File E14853; CSA Certified, Class 6225-01, File 47235, CE

### Flammability rating: UL 94HB

### Terminals

- Combination 1/4" quick-connect/solder terminals.

| Catalog no. | Amps | Volts (AC) | Fuse/description/length |
|---|---|---|---|
| HPS | 30[1 2] | 600 | 1-1/2" (38mm) |
| HPS-L | 5 | 600 | BBS, 1-3/8" |
| HPS-EE* | 15 | 600 | SC Class G up to 15 A , 1-5/16" |
| HPS-JJ* | 20 | 600 | SC Class G 20 A, 1-13/32" |
| HPS-F-EE† | 15 | 600 | Sleeve on body, leaded for 1-5/16" fuses |
| HPS-FF*† | 30[1] | 480 | SC Class G 25 and 30 A, 1-5/8" |
| HPS-RR*† | 30[1] | 600 | FNQ-R KTK-R, LP-CC Class CC |

* -EE, -JJ, -FF and -RR suffix versions are UL Recognized for applications requiring branch circuit protection.
† Not CSA Certified.
1 20 A max when used with quick-connect terminals.
2 HPS rated at 250 V for CSA.

### Dimensions — in (mm)

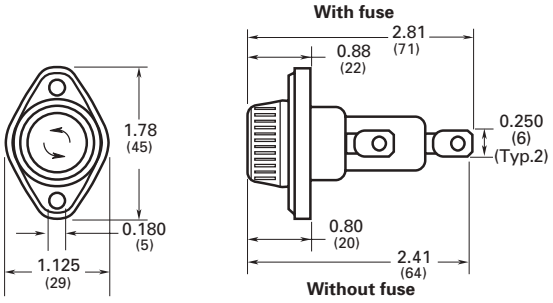


## HPS2 panel mount, 1/4" quick-connect/solder terminal (10 AWG max) holder with screw-type knob for 13/32" x 1-1/2" fuses. Supplied with O-ring and panel gasket

For fuse size 13/32" x 1-1/2", meeting UL 1598 requirement that both poles be removed simultaneously.

### Ratings

Volts 600 V

Amps 30 A*

* 20 A max when used with quick-connect terminals.

### Agency information

- UL 4248 Recognized, Guide IZLT2, File E14853, CSA certified Class 6225-01, File 47235

### Flammability rating: UL 94V0

Terminals: 1/4" quick-connect/solder.

| Catalog no. | Description |
|---|---|
| HPS2 | Standard 10-in carton |
| BK/HPS2 | Bulk 100-in carton |

### Dimensions — in (mm)

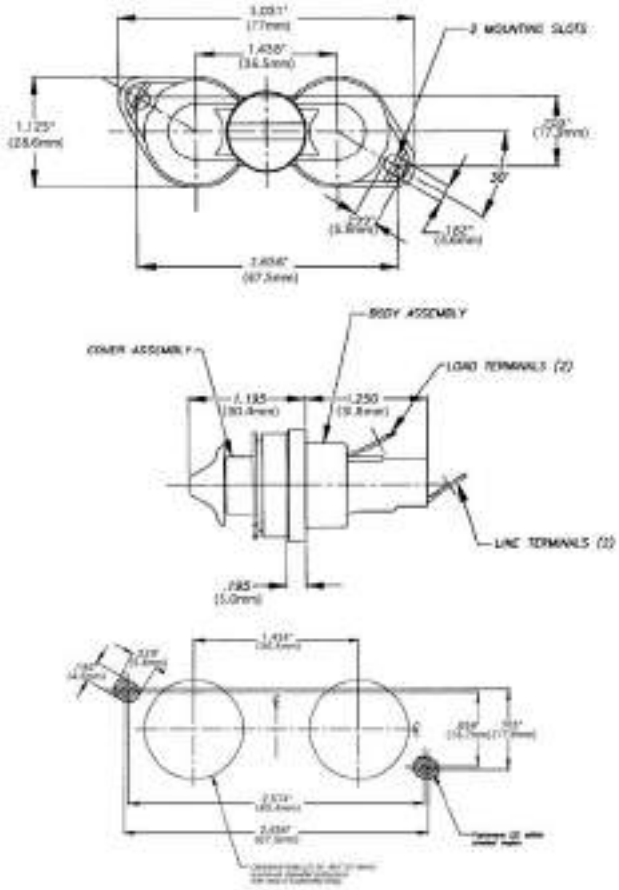

## HHT in-line fuse holder for 5x15mm to 20mm fuses

The HHT features a black thermoplastic body with brass contacts and 13 inch red AWG 16 leads.

### Ratings

- Volts
  - 250 Vac
  - 32 Vdc
- Amps
  - 5 A (5x15mm fuses)
  - 10 A (5x20mm fuses)

| Catalog no. | Fuse size (mm) |
|---|---|
| HHT (100-in) | 5x15 and 5x20 |
| BK/HHT (1000-in) | |

### Dimensions — in

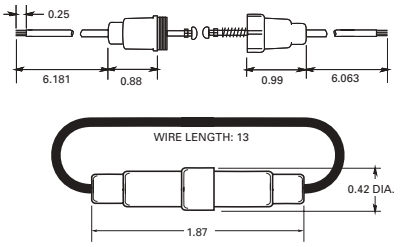


## HFA in-line water-resistant holders for 1/4" x 1-1/4" fuses

The HFA is a waterproof, crimp or quick-connect terminal holder for exposed locations made of high temperature, flame retardant phenolic material meeting UL 94 HB. Recommended crimp tools include Thomas & Betts WT-112M or ERG-2002 and Channelock No. 909.

### Ratings

- Volts 250 V
- Amps 20 A max.

### Agency information

- UL Recognized, Guide IZLT2, File E14853 using AWG 12 copper conductors

| Catalog no. | Terminals/AWG |
|---|---|
| HFA (10-in) | Crimp/12-16 |
| HFA-R (10-in, RoHS compliant) | |
| BK/HFA-R (20-in, RoHS compliant) | |
| HFA-HH* (10-in) | 1/4" quick-connect |
| HFA-HH-R* (10-in, RoHS compliant | |
| BK/HFA-HH-R* (20-in, RoHS compliant | |

* Not UL Recognized.

### Dimensions — in

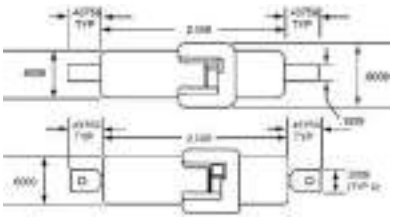

Data sheet no. 2138

Data sheet no. 2115

## HFB and HFB-10 in-line holders for 1/4" x 7/8" to 1-1/4" fuses

Water-resistant in-line fuse holder for 1/4" x 1-1/4" fuses made of a thermoplastic rubber body with tin-plated, copper contacts.

### Ratings

- Volts 32 V
- Amps 30 A max.

| Catalog no. | Description |
|---|---|
| HFB-R* | Standard pack (10-in) |
| BK/HFB-R* | Bulk pack (100-in) |
| HFB-10-R** | Standard pack (10-in) |
| BK/1A2294 | HFB replacement contact clip |
| 1A2294-01 | HFB-10** replacement contact clip |

* HFB-R accepts #12 to #18 wire leads (not provided). See data sheet 2102 for recommended crimp tools.
**HFB-10-R accepts #10 wire leads (not provided). See data sheet 2102 for recommended crimp tools.

### Features

- Simple assembly with one-piece thermoplastic (important information molded into body)
- High visibility yellow color for easy identification in dark or hard-to-access locations
- Ideal for shock and vibration environments; withstands many organic solvents; temperature range -40°C to +150°C

### Typical applications

- Supplemental, low voltage, low amperage control circuits

### Dimensions — in (mm)

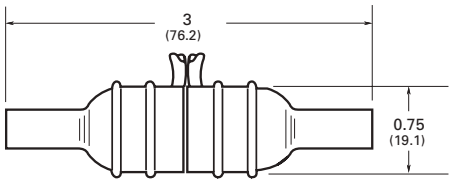


**Data sheet no. 2102**

## HHB universal in-line holders for 1/4" x 7/8", 1" and 1-1/4" fuses

Universal in-line fuse holder for 1/4" diameter fuses in lengths from 7/8" to 1-1/4" made of a nylon body with tin-plated, copper contacts.

### Ratings

- Volts 32 V
- Amps 30 A max.

| Catalog no. | Description |
|---|---|
| **Holder without leads*** | |
| HHB-R** | Standard pack (10-in) |
| BK/HHB-R** | Bulk pack (1000-in) |
| **Holder with pre-attached 14 AWG insulated lead wires** | |
| BK/HHB-Y408 | 8" yellow leads (1000-in) |
| BK/HHB-R408** | 8" red leads (1000-in) |
| BK/HHB-B408 | 8" black leads (1000-in) |
| BK/HHB-Y419 | 19" yellow leads (1000-in) |
| BK/HHB-R419 | 19" red leads (1000-in) |
| BK/HHB-B419 | 19" black leads (1000-in) |

* Accepts #12 to #16 wire leads (not provided with basic fuse holder). See data sheet 2103 for recommended crimp tools.
**RoHS compliant.

### Flammability rating: UL 94V2

### Pull force

- 5 lbs minimum to separate fuse holder housing with fuse installed

### Features

- Universal application for 1/4" x 7/8", 1" and 1-1/4" fuses

### Typical applications

- Supplemental, low voltage, low amperage control circuits

### Dimensions — in (mm)

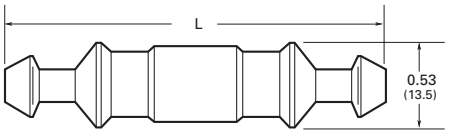


| Fuse length | Fuse | Max. holder length "L" |
|---|---|---|
| 7/8" | AWG | 2.10 |
| 1" | AGX | 2.25 |
| 1-1/4" | ABC, AGC, GBB, MDA, MDL, MDQ | 2.42 |

**Data sheet no. 2103**

## HM, HR and HH in-line holders

HM and HR in-line fuse holders feature 8 and 19 inch 14 AWG length leads with a size-rejecting SFE fuse. Also accommodates various length 1/4" diameter fuses from 5/8" to 1-1/4".

### Ratings

- Volts 32 V
- Amps 20 A max.

| Catalog no. | Included SFE fuse | Lead length (in) | Fuse length (in) |
|---|---|---|---|
| HMJ* | SFE-20 | 8 | 1-1/4 |
| HMI | SFE-14 | | 1-1/16 |
| HMH | SFE-9 | | 7/8 |
| HME | SFE-7-1/2 | | 7/8 |
| HMG | SFE-6 | | 3/4 |
| HMF | SFE-4 | | 5/8 |
| HRJ** | SFE-20 | 19 | 1-1/4 |
| HRI | SFE-14 | | 1-1/16 |
| HRH | SFE-9 | | 7/8 |
| HRE | SFE-7-1/2 | | 7/8 |
| HRG | SFE-6 | | 3/4 |
| HRF | SFE-4 | | 5/8 |

* Also available as in-line fuse holder only with lead wire contacts, HMJ-LESS-fuse.
**Also available as in-line fuse holder only with lead wire contacts, HRJ-LESS-fuse.

| Catalog no. | Fuse length (in) | Holder description | AWG wire range | Max amps |
|---|---|---|---|---|
| HHJ-A | 1-1/4 | No wire or fuse included | 18-22 | 10 |
| HHJ-B | | | 12-16 | 30 |
| HHI-A | 1-1/16 | | 18-22 | 10 |
| HHI-B | | | 12-16 | 30 |

### Replacement contacts

| Contact catalog no. | For holder catalog no. |
|---|---|
| 9838 | HHJ-A and HHI-A |
| 9841 | HHJ-B and HHI-B |

### Features

- Universal application for SFE and various length 1/4" diameter fuses.
- 14 AWG lead wires simplify electrical connection.

### Typical applications

- Supplemental, low voltage, low amperage control circuits

### Dimensions — in (mm)

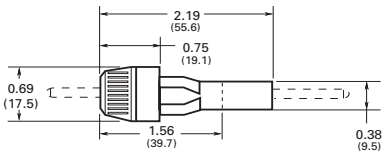


**Data sheet no. 2122**

## HRK Universal in-line holder for 1/4" x 7/8" to 1-1/4" fuses

RoHS 2011/65/EU

Universal in-line fuse holder with 8" (203mm) 14 AWG lead wires for 1/4" diameter fuses in lengths from 7/8" to 1-1/4".

### Ratings

- Volts 32 V
- Amps 15 A max.

| Catalog no. | Accepts fuse length | Fuse |
|---|---|---|
| HRK-R* | 7/8" | AWG |
| | 1" | AGX |
| | 1-1/4" | ABC, AGC, GBB, MDA, MDL, MDQ |

* Three springs furnished with fuse holder to accommodate different length 1/4" fuses.

### Features

- Universal application for 1/4" x 7/8", 1" and 1-1/4" fuses
- 14 AWG lead wires simplify electrical connection.
- RoHS compliant

### Typical applications

- Supplemental, low voltage, low amperage control circuits

### Dimensions — in (mm)

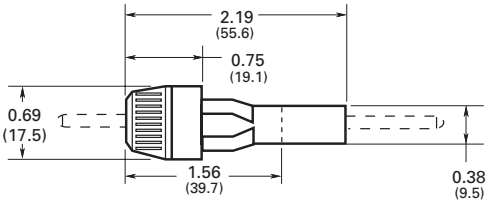


**Data sheet no. 2111**

## HEC, HEG, HEH and HEJ† single-pole Class G fuse non-breakaway in-line holders

Class G size-rejecting non-breakaway submersible, single-pole in-line fuse holders available with many terminal options to meet application needs. Optional insulating boots provide additional protection from dust and moisture ingress (order separately). The HEC is also available in a breakaway version.

† HEJ holders are not RoHS compliant.

RoHS 2011/65/EU

### Ratings*

Volts up to 600 V

Amps up to 60 A

SCCR 200 kA RMS Sym.

* Dependant upon fuse and conductor rating.

### Insulating boots

Insulating boots are not included. Two insulating boots must be ordered separately, if required, for each holder ordered. When insulating boots are utilized, extra heat retention requires that fuses are sized at a minimum of 200 percent of the RMS load current.

To order insulating boots for Class G holders, use these catalog numbers.

| Catalog no. | Description |
|---|---|
| 2A0660 | Single conductor |
| 2A0661 | Dual conductor |

### Recommended crimping tools

This list is not intended to exclude the use of other crimping tools that can provide similar crimps or indents.

| Terminal code | T & B P/N (Die) | Terminal code | T & B P/N (Die) |
|---|---|---|---|
| A | WT-111M (C) | D | TBM5 (Brown) |
| | Sta-Kon ERG4002 (C) | | TBM8 (Brown) |
| B | WT-115A (D) | | WT-115A (F) |
| C | TBM5 (Grey) | Z | WT-111M (A) |
| | WT-115A (E) | | Sta-Kon ERG4002 (A) |
| N, P, Q, R, T | TBM8 (Orange) | | |

### HET neutral

The HET holder is a single-pole in-line holder with a permanent, solid neutral for use along with the Class G in-line holders to provide a means of conductor continuity. The HET holder is identified by a white, plastic coupling nut. Available HET holder counterparts to their Class G holder equivalents are listed in the following catalog number tables. See data sheet no. 2125 for details on the HET holder.

### HEG

- 600 V
- 15 A

### HEH

- 600 V
- 20 A

### HEC

- 480 V
- 25-30 A

### HEJ

- 480 V
- 35-60 A

## HEC breakaway Class G fuse in-line holder

The HEC breakaway holder includes insulating boots.

| Amps | Catalog no. | Line and load terminal | AWG |
|---|---|---|---|
| 25-30 | HEC-RW-RLB-R | Al crimp | 1-2 str. |

## Non-breakaway catalog number system

**HE_ - A A**

| Amps | Catalog symbol | Loadside terminal | Lineside terminal | Loadside terminal | | Lineside terminal | | HET neutral equivalent |
|---|---|---|---|---|---|---|---|---|
| | | | | Terminal type | AWG Wire range* | Terminal type | AWG wire range* | |
| 15 | HEG | A | A | Cu crimp | 8-16; (2) 12-16 | Cu crimp | 8-16; (2) 12-16 | HET-AA |
| 20 | HEH | A | A | Cu crimp | 8-16; (2) 12-16 | Cu crimp | 8-16; (2) 12-16 | HET-AA |
| | | | D | Cu crimp | 8-16; (2) 12-16 | Cu crimp | 2 str; (2) 6 | — |
| 25-30 | HEC | A | A | Cu crimp | 8-16; (2) 12-16 | Cu crimp | 8-16; (2) 12-16 | HET-AA |
| 35-60 | HEJ | A | A | Cu crimp | 8-16; (2) 12-16 | Cu crimp | 8-16; (2) 12-16 | HET-AA |
| | | | B | Cu crimp | 8-16; (2) 12-16 | Cu crimp | 6; (2) 10 | HET-AB |
| | | B | B | Cu crimp | 6; (2) 10 | Cu crimp | 6; (2) 10 | HET-BB |
| | | C | C | Cu crimp | 4 str; (2) 8 | Cu crimp | 4 str; (2) 8 | — |
| | | D | D | Cu crimp | 2 str; (2) 6 | Cu crimp | 2 str; (2) 6 | — |
| | | J | J | Cu setscrew | 3-12 | Cu setscrew | 3-12 | HET-JJ |
| | | | K | Cu setscrew | 3-12 | Cu dual setscrew | 2-12† | HET-JK |
| | | L | L / LB†† | Al setscrew | 2-12 | Al setscrew | 2-12 | — |
| | | P | P | Al crimp | 4 sol; 6 str | Al crimp | 4 sol; 6 str | — |
| | | Q | Q | Al crimp | 2 sol; 3-4 str | Al crimp | 2 sol; 3-4 str | — |
| | | W | W | Cu solid | - | Cu solid | - | — |

* Solid/stranded conductors unless otherwise noted.
† Not dual wire rated. One wire per opening.
††Same as catalog number as HEJ-LL, but packaged with two 2A0660 single conductor insulating boots.

**To order**: specify catalog symbol and the loadside terminal code. Then select a lineside terminal code that is available with the loadside terminal. Example: HEJ-BB defines a non-breakaway holder with a loadside copper crimp terminal for a single #6 or two #10 wires with a lineside copper crimp terminal for a single #6 or two #10 wires.

**Data sheet no. 2123 (HEJ), 2124 (HEC, HEG, HEH)**

## HEB single-pole breakaway and non-breakaway in-line holders for 13/32" x 1-1/2" supplemental fuses

Breakaway and non-breakaway submersible, single-pole in-line fuse holders available with many terminal options to meet application needs. Breakaway versions come with insulating boots to provide submersibility per UL IP67. Non-breakaway versions require ordering optional insulating boots for submersibility.

### Ratings

Volts 600 V

Amps up to 30 A limited by conductor size

SCCR 200 kA RMS Sym.*

* Dependant upon fuse interrupting rating.

### Agency information

UL Recognized, Guide IZLT2, File E14853, CSA Certified, Class 622501, File 47235, CE, RoHS compliant**

**See data sheet 2127 for exceptions.

### Insulating boots

Two insulating boots come standard with the breakaway holder configurations. Insulating boots are not included as standard with non-breakaway holders. Two insulating boots must be ordered separately, if required, for each non-breakaway holder ordered. When insulating boots are utilized, extra heat retention requires that fuses are sized at a minimum of 200 percent of the RMS load current.

To order insulating boots for a non-breakaway HEB holder, use these catalog numbers.

| Catalog no. | Description |
|---|---|
| 2A0660 | Single conductor |
| 2A0661 | Dual conductor |

### Recommended crimping tools

This list is not intended to exclude the use of other crimping tools that can provide similar crimps or indents.

| Terminal code | T & B P/N (Die) | Terminal code | T & B P/N (Die) |
|---|---|---|---|
| A | WT-111M (C) | D | TBM5 (Brown) |
| | Sta-Kon ERG4002 (C) | | TBM8 (Brown) |
| B | WT-115A (D) | | WT-115A (F) |
| C | TBM5 (Grey) | Z | WT-111M (A) |
| | WT-115A (E) | | Sta-Kon ERG4002 (A) |
| N, P, Q, R, T | TBM8 (Orange) | | |

### HET neutral

The HET holder is a single-pole in-line holder with a permanent, solid neutral for use along with the HEB holder to provide a means of conductor continuity. The HET holder is identified by a white, plastic coupling nut. Available HET holder counterparts to their HEB equivalents are listed in the following catalog number tables. See data sheet no. 2125 for details on the HET holder.

### Breakaway catalog number system

**HEB - A W - RYC**

| Catalog symbol | Loadside terminal | Lineside terminal | Agency Information UL | Agency Information CSA | Loadside terminal: Terminal type | Loadside terminal: AWG wire range* | Lineside terminal: Terminal type | Lineside terminal: AWG wire range* | HET neutral equivalent |
|---|---|---|---|---|---|---|---|---|---|
| HEB | A | RLC-A | X | X | Cu crimp | 8-16; (2) 12-16 | Cu crimp | 8-16; (2) 12-16 | HET-AW-RLC-A |
| | | RLC-B | X | — | Cu crimp | 8-16; (2) 12-16 | Cu crimp | 6; (2) 10 | HET-AW-RLC-B |
| | | RLC-C | X | — | Cu crimp | 8-16; (2) 12-16 | Cu crimp | 4 str; (2) 8 | HET-AW-RLC-C |
| | | RLC-J | X | — | Cu crimp | 8-16; (2) 12-16 | Cu setscrew | 3-12 | HET-AW-RLC-J |
| | | RYC | X | — | Cu crimp | 8-16; (2) 12-16 | Cu dual setscrew | 2-12† | HET-AW-RYC |
| | | RLA | — | — | Cu crimp | 8-16; (2) 12-16 | Al setscrew | 2-12 | — |
| | | RYA | — | — | Cu crimp | 8-16; (2) 12-16 | Al dual setscrew | 2-12† | — |
| | B | RLC-A | X | — | Cu crimp | 6; (2) 10 | Cu crimp | 8-16; (2) 12-16 | — |
| | | RLC-B | X | — | Cu crimp | 6; (2) 10 | Cu crimp | 6; (2) 10 | HET-BW-RLC-B |
| | | RYC | X | — | Cu crimp | 6; (2) 10 | Cu dual setscrew | 2-12† | — |
| | J | RLC-J | X | — | Cu setscrew | 3-12 | Cu setscrew | 3-12 | HET-JW-RLC-J |
| | | RYC | X | — | Cu setscrew | 3-12 | Cu dual setscrew | 2-12† | HET-JW-RYC |
| | K | RLC-J | X | — | Cu dual setscrew | 2-12† | Cu setscrew | 3-12 | — |
| | | RYC | X | — | Cu dual setscrew | 2-12† | Cu dual setscrew | 2-12† | — |
| | L | RLA | — | — | Al setscrew | 2-12 | Al setscrew | 2-12 | — |
| | | RLC-J | — | — | Al setscrew | 2-12 | Cu setscrew | 3-12 | — |
| | | RYA | — | — | Al setscrew | 2-12 | Al dual setscrew | 2-12† | — |

* Solid/stranded conductors unless otherwise noted.
† Not dual wire rated. One wire per opening.

**To order:** specify catalog symbol HEB and the loadside terminal code plus the letter "W." Then select a lineside terminal code that is available with the loadside terminal. Example: HEB-BW-RCL-B defines a breakaway holder with a loadside copper crimp terminal for a single #6 or two #10 wires with a lineside copper crimp terminal for a single #6 or two #10 wires.

Data sheet no. 2127

### Non-breakaway catalog number system

**HEB - A A**

| Catalog symbol | Loadside terminal | Lineside terminal | Agency information | | Loadside terminal | | Lineside terminal | | HET neutral equivalent |
|---|---|---|---|---|---|---|---|---|---|
| | | | UL | CSA | Terminal type | AWG Wire range* | Terminal type | AWG wire range* | |
| HEB | A | A | X | X | Cu crimp | 8-16; (2) 12-16 | Cu crimp | 8-16; (2) 12-16 | HET-AA |
| | | B | X | X | Cu crimp | 8-16; (2) 12-16 | Cu crimp | 6; (2) 10 | HET-AB |
| | | C†† | X | X | Cu crimp | 8-16; (2) 12-16 | Cu crimp | 4 str; (2) 8 | — |
| | | D†† | X | X | Cu crimp | 8-16; (2) 12-16 | Cu crimp | 2 str; (2) 6 | — |
| | | J | X | — | Cu crimp | 8-16; (2) 12-16 | Cu setscrew | 3-12 | — |
| | | K | X | — | Cu crimp | 8-16; (2) 12-16 | Cu dual setscrew | 2-12† | — |
| | | R | — | — | Cu crimp | 8-16; (2) 12-16 | Al crimp | 1-2 | — |
| | | L | — | — | Cu crimp | 8-16; (2) 12-16 | Al setscrew | 2-12 | — |
| | | W | — | — | Cu crimp | 8-16; (2) 12-16 | Cu solid | — | HET-AW |
| | | Y | — | — | Cu crimp | 8-16; (2) 12-16 | Al dual setscrew | 2-12† | — |
| | B | A | X | X | Cu crimp | 6; (2) 10 | Cu crimp | 8-16; (2) 12-16 | — |
| | | B | X | X | Cu crimp | 6; (2) 10 | Cu crimp | 6; (2) 10 | HET-BB |
| | | C | X | X | Cu crimp | 6; (2) 10 | Cu crimp | 4 str; (2) 8 | — |
| | | D†† | X | X | Cu crimp | 6; (2) 10 | Cu crimp | 2 str; (2) 6 | — |
| | | W | — | — | Cu crimp | 6; (2) 10 | Cu solid | — | — |
| | C | C†† | X | X | Cu crimp | 4 str; (2) 8 | Cu crimp | 4 str; (2) 8 | — |
| | D | D | X | X | Cu crimp | 2 str; (2) 6 | Cu crimp | 2 str; (2) 6 | — |
| | Z | A | — | — | Cu crimp | 18-20 | Cu crimp | 8-16; (2) 12-16 | — |
| | J | J | X | — | Cu setscrew | 3-12 | Cu setscrew | 3-12 | HET-JJ |
| | | K | X | — | Cu setscrew | 3-12 | Cu dual setscrew | 2-12† | HET-JK |
| | | L | — | — | Cu setscrew | 3-12 | Al setscrew | 2-12 | — |
| | | W | — | — | Cu setscrew | 3-12 | Cu solid | — | — |
| | | Y | — | — | Cu setscrew | 3-12 | Al dual setscrew | 2-12† | — |
| | L | L | — | — | Al setscrew | 2-12 | Al setscrew | 2-12 | — |
| | N | N | — | — | Al crimp | 6 sol; 8 str | Al crimp | 6 sol; 8 str | — |
| | P | P | — | X | Al crimp | 4 sol; 6 str | Al crimp | 4 sol; 6 str | — |
| | Q | Q | — | X | Al crimp | 2 sol; 3-4 str | Al crimp | 2 sol; 3-4 str | — |
| | R | R | — | X | Al crimp | 1-2 str | Al crimp | 1-2 str | — |
| | T | T | — | X | Al crimp | 1/0 str | Al crimp | 1/0 str | — |
| | W | W | — | — | Cu solid | — | Cu solid | — | — |

* Solid/stranded conductors unless otherwise noted.
† Not dual wire rated. One wire per opening.

**To order**: specify catalog symbol HEB and the loadside terminal code. Then select a lineside terminal code that is available with the loadside terminal. Example: HEB-BB defines a non-breakaway holder with a loadside copper crimp terminal for a single #6 or two #10 wires with a lineside copper crimp terminal for a single #6 or two #10 wires.

**Data sheet no. 2127**

## HEZ waterproof single-pole breakaway and non-breakaway Class CC in-line holder

RoHS 2011/65/EU

HEZ submersible, single-pole in-line rejection fuse holders are for UL Class CC fuses. They are available in non-breakaway and breakaway versions with terminal options to meet application needs. Breakaway versions come with insulating boots (for details, see HEB insulating boot information) to provide submersibility per UL IP67. The non-breakaway version requires ordering optional insulating boots for submersibility.

### Ratings

- Volts 600 V
- Amps up to 30 A limited by conductor size
- Withstand 200 kA RMS Sym.

**Data sheet no. 2130**

### Agency information

- UL Listed, Guide IZLT, File E14853
- CSA Certified, Class 6225-01, File 47235
- RoHS compliant
- CE

| Catalog no. | Type | Terminal | AWG range |
|---|---|---|---|
| HEZ-AA | Non-breakaway | Line/load Cu crimp | 8-16 (2) 12-16 |
| HEZ-AW-RLC-A | Breakaway | Line/load Cu crimp | 8-16 (2) 12-16 |
| HEZ-AW-RYC | | Line Cu crimp | 8-16 (2) 12-16 |
| | | Load Cu dual setscrew† | 2-12 |

† Not dual wire rated, one wire per opening.

## HEX (13/32" x 1-1/2" supplemental) and HEY (Class CC) dual-pole breakaway and non-breakaway in-line holders

Breakaway and non-breakaway submersible, dual-pole in-line fuse holders available with terminal options to meet application needs. Breakaway versions come with insulating boots to provide submersibility per UL IP67. Non-breakaway versions require ordering optional insulating boots for submersibility.

### Ratings

Volts 600 V

Amps

- Up to 30 A limited by conductor size (UL)
- Up to 15 A limited by conductor size (CSA)

SCCR

- 200 kA RMS Sym.*

* Dependant upon fuse interrupting rating.

### Agency information

- HEX; UL Recognized, Guide IZLT2, File E14853, CSA Certified, Class 6225-01, File 47235, CE
- HEY; UL Listed, Guide IZLT, File E14853, CSA Certified, Class 6225-01, File 47235, CE

### Insulating boots

Two insulating boots come standard with the breakaway holder configurations. Insulating boots are not included as standard with non-breakaway holders. Two insulating boots must be ordered separately, if required, for each non-breakaway holder ordered. When insulating boots are utilized, extra heat retention requires that fuses are sized at a minimum of 200 percent of the RMS load current.

To order insulating boots for a non-breakaway HEB holder, use these catalog numbers.

| Catalog no. | Description |
|---|---|
| 2A0660 | Single conductor |
| 2A0661 | Dual conductor |

### Recommended crimping tools

This list is not intended to exclude the use of other crimping tools that can provide similar crimps or indents.

| HEB terminal | T & B P/N (Die) | HEB terminal | T & B P/N (Die) |
|---|---|---|---|
| A | WT-111M (C) | D | TBM5 (Brown) |
| | Sta-Kon ERG4002 (C) | | TBM8 (Brown) |
| B | WT-115A (D) | | WT-115A (F) |
| C | TBM5 (Grey) | Z | WT-111M (A) |
| | WT-115A (E) | | Sta-Kon ERG4002 (A) |
| N, P, Q, R, T | TBM8 (Orange) | | |

### HET neutral

The HET holder is a single-pole in-line holder with a permanent, solid neutral for use along with the HEB holder to provide a means of conductor continuity. The HET holder is identified by a white, plastic coupling nut. Available HET holder counterparts to their HEB equivalents are listed in the following catalog number tables. See data sheet no. 2125 for details on the HET holder.

### Breakaway catalog number system

**HE_ - A W - RYC**

| Catalog symbol | Loadside terminal | Lineside terminal | Agency Information UL | Agency Information CSA | Loadside terminal: Terminal type | Loadside terminal: AWG wire range* | Lineside terminal: Terminal type | Lineside terminal: AWG wire range* | HET neutral equivalent |
|---|---|---|---|---|---|---|---|---|---|
| **13/32" x 1-1/2" supplemental fuse** | | | | | | | | | |
| HEX | A | DRLC-A | X | X | Cu crimp | 8-16; (2) 12-16 | Cu crimp | 8-16; (2) 12-16 | HET-AW_RLC-A |
| | | DRLC-B | X | — | Cu crimp | 8-16; (2) 12-16 | Cu crimp | 6; (2) 10 | HET-AW_RLC-B |
| | | DRYC | X | — | Cu crimp | 8-16; (2) 12-16 | Cu dual setscrew | 2-12† | HET-AW_RYC |
| | J | DRYC | X | — | Cu setscrew | 3-12 | Cu dual setscrew | 2-12† | HET-JW-RYC |
| | K | DRYC | X | — | Cu dual setscrew | 2-12† | Cu dual setscrew | 2-12† | — |
| **Class CC rejection fuse** | | | | | | | | | |
| HEY | A | DRLC-A | X | X | Cu crimp | 8-16; (2) 12-16 | Cu crimp | 8-16; (2) 12-16 | HET-AW_RLC-A |
| | | DRLC-B | X | — | Cu crimp | 8-16; (2) 12-16 | Cu crimp | 6; (2) 10 | HET-AW_RLC-B |
| | | DRLC-J | X | — | Cu crimp | 8-12; (2) 12-16 | Cu setscrew | 3-12 | HET-AW_RLC-J |
| | | DRYC | X | — | Cu crimp | 8-16; (2) 12-16 | Cu dual setscrew | 2-12† | HET-AW_RYC |

* Solid/stranded conductors unless otherwise noted.
† Not dual wire rated. One wire per opening.

**To order:** specify catalog symbol HEX and the loadside terminal code plus the letter "W." Then select a lineside terminal code that is available with the loadside terminal. Example: HEX-AW-DRCL-B defines a breakaway holder with a loadside copper crimp terminal for a single #8-16 or two #12-16 wires with a lineside copper crimp terminal for a single #6 or two #10 wires.

**Data sheet no. 2126**

## Non-breakaway catalog number system

**HE_ - A A**

| Catalog symbol | Loadside terminal | Lineside terminal | Agency information | | Loadside terminal | | Lineside terminal | | HET neutral equivalent |
|---|---|---|---|---|---|---|---|---|---|
| | | | UL | CSA | Terminal type | AWG Wire range* | Terminal type | AWG wire range* | |
| **13/32" x 1-1/2" supplemental fuse** | | | | | | | | | |
| HEX | A | A | X | X | Cu crimp | 8-16; (2) 12-16 | Cu crimp | 8-16; (2) 12-16 | HET-AA |
| | | B | X | X | Cu crimp | 8-16; (2) 12-16 | Cu crimp | 6; (2) 10 | HET-AB |
| | | C | X | X | Cu crimp | 8-16; (2) 12-16 | Cu crimp | 4 str; (2) 8 | — |
| | | D | X | X | Cu crimp | 8-16; (2) 12-16 | Cu crimp | 2 str; (2) 6 | — |
| | | E | X | X | Cu crimp | 8-16; (2) 12-16 | Cu crimp | (2) 4 | — |
| | B | B | X | X | Cu crimp | 6; (2) 10 | Cu crimp | 6; (2) 10 | HET-BB |
| | C | C | X | X | Cu crimp | 4 str; (2) 8 | Cu crimp | 4 str; (2) 8 | — |
| | J | J | X | — | Cu setscrew | 3-12 | Cu setscrew | 3-12 | HET-JJ |
| | | K | X | — | Cu setscrew | 3-12 | Cu dual setscrew | 2-12† | HET-JK |
| **Class CC rejection fuse** | | | | | | | | | |
| HEY | A | A | X | X | Cu crimp | 8-16; (2) 12-16 | Cu crimp | 8-16; (2) 12-16 | HET-AA |
| | | B | X | X | Cu crimp | 8-16; (2) 12-16 | Cu crimp | 6; (2) 10 | HET-AB |
| | | C | X | X | Cu crimp | 8-16; (2) 12-16 | Cu crimp | 4 str; (2) 8 | — |
| | | D | X | X | Cu crimp | 8-16; (2) 12-16 | Cu crimp | 2 str; (2) 6 | — |
| | | E | X | X | Cu crimp | 8-16; (2) 12-16 | Cu crimp | (2) 4 | — |
| | B | B | X | X | Cu crimp | 6; (2) 10 | Cu crimp | 6; (2) 10 | HET-BB |
| | J | J | X | — | Cu setscrew | 3-12 | Cu setscrew | 3-12 | HET-JJ |

* Solid/stranded conductors unless otherwise noted.
† Not dual wire rated. One wire per opening.

**To order**: specify catalog symbol HE_ and the loadside terminal code. Then select a lineside terminal code that is available with the loadside terminal. Example: HEX-BB defines a non-breakaway holder with a loadside copper crimp terminal for a single #6 or two #10 wires with a lineside copper crimp terminal for a single #6 or two #10 wires.

**Data sheet no. 2126**

# Maximize short-circuit current rating up to 200 kA

## with Bussmann series finger-safe power distribution fuse blocks

## Contents


| Description | Section page |
|---|---|
| **Selecting power distribution blocks** | **2** |
| **Power distribution blocks** | |
| PDBFS UL Listed finger-safe, high SCCR blocks | 3-5 |
| PDB UL Listed high SCCR open blocks | 6-8 |
| 160, 162, 163, 164 and 165 UL Recognized open blocks | 9-12 |
| **Power stud terminal blocks** | |
| 162, 163 and 165 UL Recognized blocks | 13-14 |
| **Power splicer blocks** | |
| 160, 162, 163 and 165 UL Recognized blocks | 15-16 |
| **Power terminal blocks** | |
| 11675 250 V screw/quick-connect block | 17 |
| 11725 600 V screw/quick-connect block | |
| **Barrier and deadfront terminal blocks** | |
| 14002 600 V barrier block | 17 |
| 14004 600 V dead front block | |


### Simplify your panel design

To save panel space and reduce component count, Bussmann series power distribution fuse blocks combine circuit protection and power distribution into one unit. Available in Class H(K), and R up to 60 amps and Class J up to 400 amps, with up to a high 200 kA withstand rating. See these cost and space saving products in Section 8, *Fuse blocks and holders*.

## Selecting SCCR power distribution blocks and terminal blocks

### Short-circuit current rated power distribution blocks

Bussmann series power distribution blocks have three distinct styles to match different application needs. There are the PDBFS_ and PDB_ high short-circuit current rated power distribution blocks and the 16_ power terminal blocks. The differences are whether the power distribution blocks are enclosed or not, and whether they are UL 1953 Listed power distribution blocks or UL 1059 Recognized power terminal blocks, which have different minimum spacing requirements. The table on this page will assist you in selecting which block is right for your application.

### Why these are important

Per the NEC and OSHA, equipment cannot be installed in an electrical system at a location where the available fault (short-circuit) current is greater than the equipment's SCCR.

Further, equipment SCCRs are required in the 2014 NEC and for UL 508A Listed control panels. Marking the equipment SCCR on control panels (NEC 409.110), industrial machinery electrical panels (NEC 670.3(A)), and HVAC equipment (NEC 440.4(B)) is required by the NEC.

Power distribution and terminal blocks not marked with a component SCCR are typically one of the weakest links in a control panel's equipment SCCR and may limit the equipment SCCR to no more than 10 kA. The PDBFS_ and PDB_ products have the increased spacing required for use in feeder circuits of equipment listed to UL 508A (UL 1059 terminal blocks must be evaluated for proper spacings). Also, for building wiring systems, the PDBFS_ and PDB_ power distribution blocks can be used to meet the 2014 NEC requirements in section 376.56(B) for power distribution blocks in wireways.

### Selection table

The table below provides an overview of the three Bussmann series power distribution and terminal blocks mentioned above. For details on the PDB_ blocks, see data sheet number 10537. For the 16_ blocks, see data sheet numbers 10533 (UL Recognized power distribution blocks), 10534 (splicer blocks) and 10535 (stud blocks).

| Catalog symbol | UL status | Enclosed | High SCCR* | Spacing ** 1" air, 2" surface | UL 508A panel branch circuit | UL 508A panel feeder circuit | HVAC UL 1995 | Wireways NEC 376.56(B) (requires UL 1953) |
|---|---|---|---|---|---|---|---|---|
| PDBFS_ | UL 1953 Listed power distribution blocks | Yes*** | Yes | Yes | Yes | Yes | Yes | Yes |
| PDB_ | UL 1953 Listed power distribution blocks | No† | Yes | Yes | Yes | Yes | Yes | Yes, with optional cover |
| 16_ | UL 1059 Recognized terminal blocks | No† | Yes | No†† | Yes | No†† | Yes | No |

* When protected by proper fuse class with maximum ampere rating specified or smaller.
** For details, see PDB and TB minimum spacing requirements for equipment table below.
*** IP20 finger-safe under specific conditions, see data sheet 10536.
† Optional covers are available. Not IP20, but provide a safety benefit.
†† No, except if single pole units installed with proper spacings.

### Power distribution and terminal block minimum spacing requirements for equipment

| UL standard | Spacing between live parts of opposite polarity | | Spacing between live parts and grounded parts or enclosure @ 600 V |
|---|---|---|---|
| | Through air @ 600 V | Over surface @ 600 V | |
| 508A feeder circuits | 1" | 2" | 1" |
| 508A branch circuits | 3/8" | 1/2" | 1/2" |
| 1995 HVAC | 3/8" | 1/2" | 1/2" |

Note: Refer to specific UL standards for complete spacing details.

## PDBFS UL Listed finger-safe, high SCCR power distribution blocks

These single pole, small footprint, high Short-Circuit Current Rating (SCCR) power distribution blocks provide IP20* finger-safe protection in a modular design that permits dovetailing together the required number of poles and still meet the UL 1953 minimum 1" and 2" spacing required per UL 508A for feeder circuit applications and per NEC for field installations.

With SCCRs up to 200 kA, these blocks help achieve compliance with NEC and OSHA requirements by resolving a common SCCR "weak link" in industrial control panels.

To increase application flexibility, these blocks feature dual-wire rated ports that accept copper or aluminum conductors while retaining a UL Listed status.

RoHS 2011/65/EU

With panel or 35mm DIN-Rail** mounting these blocks are suitable for installation in wireways and industrial control panel feeder and branch circuits.

* See table on page 9-5.
**PDFFS504 panel mount only.

### Ratings

- Volts
  - 600 V (UL)
  - 690 V (IEC)
  - 1000 V (self-certified)
- Amps 175 to 760 A
- SCCR Up to 200 kA (see table for circuit protection details)

### Conductors†

- Stranded 75°C copper and aluminum
- Higher temperature rated conductors permitted with appropriate derating

† As specified in the catalog number table.

### Agency information

- UL 1953 Listed, Guide QPQS, File E256146
- CSA Certified, Class 6228-01, File 47235
- RoHS compliant
- CE

### Flammability rating

- UL 94 V0

### How to order

- From the catalog number table, select the catalog number that defines the desired lineside/loadside port and conductor characteristics
- Order one block per pole for the application
- Multiple single-pole blocks can be ganged together via the dovetailing feature to form multi-pole configurations

### Catalog number example — PDBFS204 is a 1-pole block

Where:

- The catalog symbol "PDBFS" defines the block as a finger-safe design
- The catalog number ending "204" in this example defines this block's lineside and loadside characteristics covering the amp rating, number of ports and wire sizes, etc.
- See the catalog number table for details on the available lineside/loadside characteristics.

### Features

- IP20 finger-safe under specified conditions increases safety by isolating energized connections
- Wire-ready captive termination screws cannot be misplaced and are shipped "backed out" to save time on conductor installation
- Sliding DIN-Rail latch provides easy block mounting
- For multiple pole applications, all single-pole units can be gang mounted by using the interlocking dovetail pins that are pre-installed on the side of the blocks
- Elongated panel-mounting holes provide greater flexibility and installation ease when matching up with drilled panel holes

### Dual wire port application

- Rated for dual wire port application to increase the possible number of lineside and loadside connections. E.g., PDBFS220 can accept two wires into the lineside port (4 - 14 Cu, 4 - 8 Al) and two wires per port (eight connections total) on the loadside lug (8 - 14 Cu, 8 Al).
- Dual wire applications are only viable when using two wires of the same size, stranding, and insulating and conductor material.
- Ferrule terminal application
- Bussmann series PDBFS power distribution blocks are rated for use with UL Listed ferrules (see catalog number table for details).
- Ferrule applications allow for the use of a broader range of conductor stranding and simulate a more efficient, solid wire connection with the PDBFS terminal port.
- Always use UL Listed ferrules in accordance with the manufacturer's specifications and instructions.

### Multi-pole block ganging

Dovetail feature permits easy ganging for multi-pole applications

PDBFS blocks can be ganged for the required number of poles.

To gang two or more blocks for DIN-Rail or panel mounting, place them side-by-side and slide the dovetail pin of one block into the reciprocal slot on the other until fully seated and both blocks are coplanar.

**Note:** Dissimilar PDBFS blocks can be ganged. E.g., a PDBFS204 can be ganged with a PDBFS220. Ganging with a PDBFS504 (non-DIN Rail mount version) will prevent DIN-Rail mounting.



**Data sheet no. 10536**

| Line/load port configuration | Current rating (A) | Lineside Wire size (Str/ferrule unless noted)* | Lineside Wires per port | Lineside Torque N•m (lb-in) | Lineside Ports/pole | Loadside Wire size (Str/ferrule unless noted)* | Loadside Wires per port | Loadside Torque N•m (lb-in) | Loadside Ports/pole | Max SCCR (kA)** | Catalog no. |
|---|---|---|---|---|---|---|---|---|---|---|---|
| 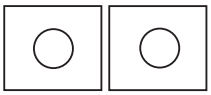 | 175 | 2/0 - 1 Cu/Al (Str) | 1 | 12.4 (110)†† | 1 | 2/0 - 1 Cu/Al (Str) | 1 | 12.4 (110)†† | 1 | 200 | PDBFS204 |
| | | 2 - 3 Cu/Al | 1 | | | 2 - 3 Cu/Al | 1 | | | | |
| | | 4 - 8 Cu/Al | 1 | | | 4 - 8 Cu/Al | 1 | | | | |
| | | 10 - 12 Al (Str) | 1 | 4.0 (35) | | 10 - 12 Al (Str) | 1 | 4.0 (35) | | | |
| | | 10 - 14 Cu | 1 | | | 10 - 14 Cu | 1 | | | | |
| | | 4 - 8 Cu/Al | 2 | 13.6 (120) | | 4 - 8 Cu/Al | 2 | 13.6 (120) | | | |
| | | 10 - 14 Cu | 2 | | | 10 - 14 Cu | 2 | | | | |
| 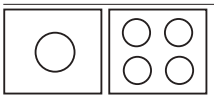 | 175 | 2/0 - 1 Cu/Al (Str) | 1 | 13.6 (120) | 1 | 4 - 6 Cu/Al (Str) | 1 | 4.0 (35) | 4 | 200 | PDBFS220 |
| | | 2 - 3 Cu/Al | 1 | | | 8 Cu | 1 | 2.8 (25) | | | |
| | | 4 - 8 Cu/Al | 1-2 | | | 8 Al (Str) | 1-2 | | | | |
| | | 10 - 14 Cu | 1-2 | | | 10 - 14 Cu | 1-2 | 2.3 (20) | | | |
| 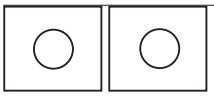 | 310 | 350kcmil - 2/0 Cu/Al (Str) | 1 | 31.1 (275)† | 1 | 350kcmil - 2/0 Cu/Al (Str) | 1 | 31.1 (275)† | 1 | 200 | PDBFS303 |
| | | 1/0 Cu/Al (Str) | 1-2 | | | 1/0 Cu/Al (Str) | 1-2 | | | | |
| | | 1 - 6 Cu/Al | 1-2 | | | 1 - 6 Cu/Al | 1-2 | | | | |
| 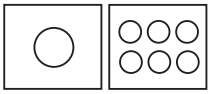 | 380 | 500kcmil - 4/0 Cu/Al (Str) | 1 | 56.5 (500) | 1 | 2 - 3 Cu/Al (Str) | 1 | 5.6 (50) | 6 | 200 | PDBFS330 |
| | | | | | | 4 Cu/Al | 1 | 5.1 (45) | | | |
| | | 3/0 - 1/0 Cu/Al (Str) | 1-2 | | | 6 Cu/Al | 1-2 | | | | |
| | | 1 - 6 Cu/Al | 1-2 | | | 8 Cu/Al | 1-2 | 4.5 (40) | | | |
| | | | | | | 10 - 14 Cu | 1-2 | 4.0 (35) | | | |
| 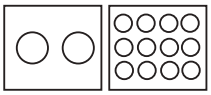 | 570 | 300kcmil - 2/0 Cu/Al (Str) | 1 | 31.1 (275)† | 2 | 4 - 6 Cu/Al (Str) | 1 | 4.0 (35) | 12 | 200 | PDBFS377 |
| | | 1/0 Cu/Al (Str) | 1-2 | | | 8 Cu | 1 | 2.8 (25) | | | |
| | | 1 - 2 Cu/Al | 1-2 | | | 8 Al (Str) | 1-2 | | | | |
| | | 4 Cu/Al (Str) | 1-2 | | | 10 - 12 Al (Str) | 1 | 2.3 (20) | | | |
| | | | | | | 10 - 14 Cu | 1-2 | | | | |
| 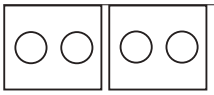 | 620 | 350kcmil - 2/0 Cu/Al (Str) | 1 | 31.1 (275)† | 2 | 350kcmil - 2/0 Cu/Al (Str) | 1 | 31.1 (275)† | 2 | 200 | PDBFS500 |
| | | 1/0 Cu/Al (Str) | 1-2 | | | 1/0 Cu/Al (Str) | 1-2 | | | | |
| | | 1 - 4 Cu/Al | 1-2 | | | 1 - 4 Cu/Al | 1-2 | | | | |
| | | 6 Cu/Al | 2 | | | 6 Cu/Al | 2 | | | | |
| 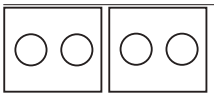 | 760 | 500kcmil - 4/0 Cu/Al (Str) | 1 | 56.5 (500) | 2 | 500kcmil - 4/0 Cu/Al (Str) | 1 | 56.5 (500) | 2 | 200 | PDBFS504 |
| | | 3/0 - 1/0 Cu/Al (Str) | 1-2 | | | 3/0 - 1/0 Cu/Al (Str) | 1-2 | | | | |
| | | 1 - 6 Cu/Al | 1-2 | | | 1 - 6 Cu/Al | 1-2 | | | | |

* 75°C wire (higher temperature rated wire acceptable with appropriate derating). Using a ferrule on a stranded conductor requires a correctly sized UL Listed ferrule (customer supplied) applied according to the manufacturer's specifications. Ferrule ratings apply to copper wire only.
**See pages 9-4 and 9-5 for the tested upstream overcurrent protective devices necessary for achieving these SCCRs.
† Torque rating for dual wire and ferrule application is 30.5 N•m (270 lb-in).
††Torque rating for ferrule application is 13.6 N•m (120 lb-in).

## Upstream fusing for SCCR and minimum enclosure data

This table contains the tested SCCR levels for each PDBFS power distribution block using the specified lineside and loadside conductors and Bussmann series Class J, RK1, RK5 and T fuses. Using these tested SCCR levels also requires the power distribution block be installed in an enclosure with the minimum size indicated for each catalog number.

| Catalog no. | Conductors (AWG/kcmil) Lineside | Conductors (AWG/kcmil) Loadside | Fuse class and maximum amps* J — LPJ | RK1 — LPN-RK (250 V) LPS-RK (600 V) | RK5 — FRN-R (250 V), FRS-R (600 V) | T — JJN (300 V), JJS (600 V) | SCCR (kA) | Min. enclosure size (in) |
|---|---|---|---|---|---|---|---|---|
| PDBFS204 | 2/0 - 8 | 2/0 - 8 | 200 | 100 | 60 | 200 | 200 | 16 x 16 x 6.75 |
| PDBFS220 | 2/0 - 8 | 4 - 12 | 200 | 100 | 60 | 200 | 200 | 16 x 16 x 6.75 |
| | | 4 - 14 | 175 | 100 | 30 | 175 | 100 | |
| | | | 200 | 100 | 60 | 200 | 50 | |
| PDBFS303 | 350 - 6 | 350 - 6 | 400 | 200 | 100 | 400 | 200 | 36 x 30 x 12.625 |
| PDBFS330 | 500 - 6 | 2 - 6 | 400 | 200 | 100 | 400 | 200 | 24 x 20 x 6.75 |
| | | 6 - 14 | 200 | 100 | 60 | 200 | 50 | |
| | | | 175 | 100 | 30 | 175 | 100 | |
| PDBFS377 | 300 - 4 | 4 | 600 | 400 | 200 | 600 | 200 | 24 x 20 x 6.75 |
| | | | 400 | 200 | 100 | 400 | 100 | |
| | | 4 - 14 | 200 | 100 | 60 | 200 | 50 | |
| | 4 | 4 | 600 | 400 | 200 | 600 | 50 | |
| PDBFS500 | 350 | 350 | 600 | 400 | 200 | 600 | 200 | 36 x 30 x 12.625 |
| | 350 - 4 | 350 - 4 | 600 | 400 | 200 | 600 | 100 | |
| PDBFS504 | 500 | 500 | 600 | 600 | 200 | 800** | 200 | 36 x 30 x 12.625 |
| | 500 - 6 | 500 - 6 | 600 | 400 | 200 | 600 | 100 | |

Ampacities 75°C per NEC® Table 310.16 and UL 508A Table 28.1.
* Class G 60 A (SC-60) or less or Class CC 30 A (LP-CC-30, FNQ-R-30, KTK-R-30) or less are suitable for all SCCRs in this table.
**Class L 800 A (KRP-C 800_SP) or less fuses suitable for this particular SCCR case.

**Data sheet no. 10536**

## Upstream circuit breakers for SCCR and minimum enclosure data

This table contains the tested SCCR levels for each PDBFS power distribution block using the specified lineside and loadside conductors and Eaton and General Electric circuit breakers. Using these tested SCCR levels also requires the power distribution block be installed in an enclosure with the minimum size indicated for each catalog number.

### PDBFS SCCR as rated with Eaton circuit breakers

| Catalog no. | Suitable Cu conductors kcmil/AWG Lineside | Suitable Cu conductors kcmil/AWG Loadside | SCCR, RMS Sym. (kA) | Volts max | Overcurrent protection circuit breaker required Type | Overcurrent protection circuit breaker required Max amp | Min. enclosure size (in.) |
|---|---|---|---|---|---|---|---|
| PDBFS204 | 2/0 - 8 | 2/0 - 8 | 65 | 480 | EGC125, E125C, EGH125, E125H | 125 | 16 x 16 x 6.75 |
| PDBFS330 | 500 - 3 | 2 - 8 | 14 | 480 | LGH400, L400H, LGE400, L400E, LGS400, L400S | 400 | 24 x 20 x 6.75 |
| | | | 25 | | LGC400, L400C, LGU400, L400U, LGX400, L400X | | |
| PDBFS377 | (2) 300 - 2 | 4 | 30 | 480 | LGH600, L600H, LGE600, L600E, LGS600, L600S | 600 | 24 x 20 x 6.75 |
| | | 6 | 18 | | | | |
| | | 8 | 14 | | | | |
| | | 4 | 42 | | LGC600, L600C, LGU600, L600U, LGX600, L600X | | |
| | | 6 | 35 | | | | |
| | | 8 | 14 | | | | |

### PDBFS SCCR as rated with General Electric circuit breakers

| Catalog no. | Suitable Cu conductors kcmil/AWG Lineside | Suitable Cu conductors kcmil/AWG Loadside | SCCR, RMS Sym. (kA) | Volts max | Overcurrent protection circuit breaker required Type | Overcurrent protection circuit breaker required Max amp | Min. enclosure size (in.) |
|---|---|---|---|---|---|---|---|
| PDBFS204 | 2/0 - 8 | 2/0 - 8 | 65 | 480 | SELA | 150 | 16 x 16 x 6.75 |
| | | | 25 | | SEHA | 150 | |
| PDBFS220 | 2/0 - 8 | 4 - 12 | 65 | 480 | SELA | 150 | 16 x 16 x 6.75 |
| | | | 25 | | SEHA | 150 | |
| PDBFS303 | 250 - 6 | 350 - 6 | 65 | 480 | SFLA | 250 | 24 x 20 x 6.75 |
| | | 250 - 6 | 35 | | SFHA | 250 | |
| | 3/0 - 6 | 350 - 6 | 65 | | SELA | 150 | |
| | | | 25 | | SEHA | 150 | |
| PDBFS330 | 250 - 6 | 2 - 12 | 65 | 480 | SFLA | 250 | 24 x 20 x 6.75 |
| | | | 35 | | SFHA | 250 | |
| | 3/0 - 6 | | 65 | | SELA | 150 | |
| | | | 25 | | SEHA | 150 | |

## Specified installation conditions for IP20 finger-safe ratings

This table contains the installed wire and trim lengths, and other conditions the PDBFS power distribution blocks need in order to be compliant with IP20 specifications. IP20 compliance status is indicated in the lineside and loadside wire port and terminal screw opening columns.

| Catalog no. | Lineside Installed wire/state | Lineside Wire trim length - in (mm) | Lineside IP20 status Wire port opening | Lineside IP20 status Terminal screw opening | Loadside Installed wire/state | Loadside Wire trim length - in (mm) | Loadside IP20 status Wire port opening | Loadside IP20 status Terminal screw opening |
|---|---|---|---|---|---|---|---|---|
| PDBFS204 | 2/0 - 8 | 0.85 (22) | Yes | Yes | 2/0 - 8 | 0.97 (25) | Yes | Yes |
| PDBFS220 | 2/0 - 8 | 0.75 (19) | Yes | Yes | 4 - 14 | Top row 0.55 (14), Bottom row 0.85 (22) | Yes | Yes |
| | | | | | Screws fully opened | | N/A | Yes |
| | | | | | No wire in hole | | No | N/A |
| PDBFS303 | 350kcmil - 2/0 | 1.35 (34) | Yes | Yes | 350kcmil - 2/0 | 1.25 (32) | Yes | Yes |
| | 1/0 - 6 | | No | Yes | 1/0 - 6 | | No | Yes |
| PDBFS330 | 500 - 250kcmil | 1.25 (32) | Yes | Yes | 2 - 14 | Top row 0.59 (15), Bottom row 1.2 (30) | Yes | Yes |
| | 4/0 - 6 | | No | Yes | Screws fully opened | | N/A | Yes |
| | | | | | No wire in hole | | Yes | N/A |
| PDBFS377 | 300kcmil - 4/0 | Top row 1.15 (29) bottom row 1.4 (36) | Yes | Yes | 4 - 14 | Top row 0.55 (14), Middle row 1.00 (35), Bottom row 1.22 (31) | Yes | Yes |
| | 3/0 - 4 | | No | Yes | Screws fully open | | N/A | Yes |
| | Screws fully open | | N/A | No | No wire in port | | Yes | N/A |
| | No wire in port | | No | N/A | | | | |
| PDBFS500 | 350kcmil - 2/0 | 1.25 (32) | No | Yes | 350kcmil - 2/0 | 1.25 (32) | Yes | Yes |
| | 1/0 - 4 | | No | Yes | 1/0 - 4 | | No | Yes |
| | Screws fully opened | | N/A | No | Screws fully open | | N/A | No |
| | No wire in port | | No | N/A | No wire in port | | No | N/A |
| PDBFS504 | 500 - 350kcmil | 1.25 (32) | Yes | Yes | 500 - 350kcmil | 1.25 (32) | Yes | Yes |
| | 300 - 6 | | No | Yes | 300 - 6 | | No | Yes |
| | Screws fully open | | N/A | No | Screws fully opened | | N/A | No |
| | No wire in port | | No | N/A | No wire in port | | No | N/A |

## PDB UL Listed high SCCR open power distribution blocks

High Short-Circuit Current Rating (SCCR) power distribution blocks provide up to 200 kA SCCR and help achieve compliance with NEC and OSHA requirements by resolving a common SCCR "weak link" in industrial control panels.

Available in 1-, 2- and 3-pole panel mount versions with popular lineside and loadside port configurations, these blocks are UL Listed with the requisite spacing between uninsulated opposite polarities or ground by meeting the UL 1953 1" through air and 2" over surface spacings required per UL 508A for feeder circuit applications and per NEC for field installations.

To increase application flexibility, these blocks feature dual-wire rated ports that accept copper or aluminum conductors while retaining a UL Listed status.

Optional covers are available to enhance electrical safety.

### Ratings

- Volts 600 V
- Amps 175 to 310 A
- SCCR 200 kA (see table for circuit protection details)

### Conductors†

- Stranded 75°C copper and aluminum
- Higher temperature rated conductors permitted with appropriate derating

† As specified in the catalog number table.

### Agency information

- UL 1953 Listed, Guide QPQS, File E256146
- CSA Certified, Class 6228-01, File 47235
- CE

### Flammability rating

- UL 94 V0

### How to order

From the catalog number table, select the catalog number that defines the desired lineside/loadside port and conductor characteristics.

Add to the catalog number the suffix that defines the desired pole configuration. Note, you must select from the available number of poles for each catalog number. These appear in the second column of the catalog number tables.

### Catalog number example — PDB323-3 is a 3-pole PDB323

Where:

- The prefix "PDB323" defines the block's lineside characteristics (i.e., one conductor port per pole that accepts 350kcmil-6 Cu/Al conductors) and the loadside characteristics (i.e., six (6) conductor ports per pole that each accepts 4-14 Cu or 4-12 Al conductors)
- The suffix "3" in this example defines this as a three-pole block
- See the catalog number table for details on the available lineside/loadside characteristics

### Data sheet no. 10537

### Features

- High SCCRs up to 200 kA, assist in achieving high SCCR for a control panel per NEC and UL 508A requirements
- In compliance with UL 1953 minimum spacing requirements for industrial control panel feeder and branch circuits
- Optional covers available to reduce the risk of accidental contact with energized components

### Dual wire port application

- Rated for dual wire port application to increase the possible number of lineside and loadside connections. E.g., PDB220 can accept two wires into the lineside port (4-14 Cu, 4-8 Al) and two wires per port (eight connections per pole total) on the loadside lug (8-14 Cu, 8 Al).
- Dual wire applications are only viable when using two wires of the same size, stranding, and insulating and conductor material in the same port

### Ferrule terminal application

- Bussmann series PDB power distribution blocks are rated for use with UL Listed ferrules (see catalog number table for details)
- Ferrule applications allow for the use of a broader range of conductor stranding and simulate a more efficient, solid wire connection with the PDB terminal port
- Always use UL Listed ferrules in accordance with the manufacturer's specifications and instructions

### Optional covers

Electrical safety can be enhanced by installing optional covers.

From the table below, order the cover catalog number that matches the block catalog number. Order the quantity indicated in the "order quantity" column. E.g., the 3-pole block PDB204-3 requires ordering three CPB162-1 covers (one cover for each pole).

| Block catalog no. | Poles | Cover catalog no. | Order quantity |
|---|---|---|---|
| PDB204-1 | 1 | CPB162-1 | 1 |
| PDB204-3 | 3 | CPB162-1 | 3 |
| PDB220-1 | 1 | CPB162-1 | 1 |
| PDB220-3 | 3 | CPB162-1 | 3 |
| PDB280-1 | 1 | CPB162-1 | 1 |
| PDB280-3 | 3 | CPB162-1 | 3 |
| PDB323-1 | 1 | CPDB-1 | 1 |
| PDB323-3 | 3 | CPDB-1 | 3 |
| PDB370-1 | 1 | CPDB-1 | 1 |
| PDB370-3 | 3 | CPDB-1 | 3 |
| PDB371-1 | 1 | CPDB-1 | 1 |
| PDB371-3 | 3 | CPDB-1 | 3 |
| PDB321-1 | 1 | CPDB-1* | 1 |
| PDB321-2 | 2 | CPDB-2* | 1 |
| PDB321-3 | 3 | CPDB-3* | 1 |

* For the PDB321-_ blocks, order one cover for each block (not per pole).

| Line/load port configuration | No. of poles | Current rating (A) | Lineside Wire size (Str/ferrule unless noted)* | Lineside Wires per port | Lineside Torque N•m (lb-in) | Lineside Ports/ pole | Loadside Wire size (Str/ferrule unless noted)* | Loadside Wires per port | Loadside Torque N•m (lb-in) | Loadside Ports/ pole | Max SCCR (kA)** | Catalog no. |
|---|---|---|---|---|---|---|---|---|---|---|---|---|
| 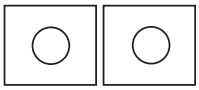 | 1, 3 | 175 | 2/0 - 1 Cu/Al (Str) | 1 | 12.4 (110)†† | 1 | 2/0 - 1 Cu/Al (Str) | 1 | 12.4 (110)†† | 1 | 200 | PDB204-_ |
| | | | 2 - 3 Cu/Al | 1 | | | 2 - 3 Cu/Al | 1 | | | | |
| | | | 4 - 8 Cu/Al | 1 | | | 4 - 8 Cu/Al | 1 | | | | |
| | | | 10 - 12 Al (Str) | 1 | 4.0 (35) | | 10 - 12 Al (Str) | 1 | 4.0 (35) | | | |
| | | | 10 - 14 Cu | 1 | | | 10 - 14 Cu | 1 | | | | |
| | | | 4 - 8 Cu/Al | 2 | 13.6 (120) | | 4 - 8 Cu/Al | 2 | 13.6 (120) | | | |
| | | | 10 - 14 Cu | 2 | | | 10 - 14 Cu | 2 | | | | |
| 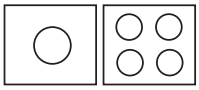 | 1, 3 | 175 | 2/0 - 1 Cu/Al (Str) | 1 | 13.6 (120) | 1 | 4 - 6 Cu/Al (Str) | 1 | 4.0 (35) | 4 | 200 | PDB220-_ |
| | | | 2 - 3 Cu/Al | 1 | | | 8 Cu | 1 | 2.8 (25) | | | |
| | | | 4 - 8 Cu/Al | 1-2 | | | 8 Al (Str) | 1-2 | | | | |
| | | | 10 - 14 Cu | 1-2 | | | 10 - 14 Cu | 1-2 | 2.3 (20) | | | |
| 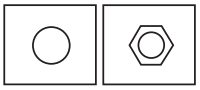 | 1, 3 | 175 | 2/0 - 1 Cu/Al (Str) | 1 | 13.6 (120) | 1 | 1/4-20 x 3/4″ Stud | — | — | 1 | 200 | PDB280-_ |
| | | | 2 - 3 Cu/Al | 1 | | | | | | | | |
| | | | 4 - 8 Cu/Al | 1-2 | | | | | | | | |
| | | | 10 - 14 Cu | 1-2 | | | | | | | | |
| 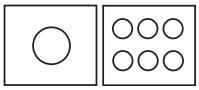 | 1, 2, 3 | 175 | 2/0 - 1 Cu/Al (Str) | 1 | 13.6 (120) | 1 | 4 - 6 Cu/Al (Str) | 1 | 4.0 (35) | 6 | 200 | PDB321-_ |
| | | | 2 - 3 Cu/Al | 1 | | | 8 Al (Str) | 1-2 | | | | |
| | | | 4 - 8 Cu/Al | 1-2 | | | 8 Cu | 1 | 2.8 (25) | | | |
| | | | 10 - 12 Al (Str) | 1 | | | 10 - 12 Al (Str) | 1 | 4.0 (35) | | | |
| | | | 10 - 14 Cu | 1-2 | | | 10 - 14 Cu | 1-2 | 2.3 (20) | | | |
| 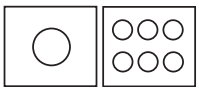 | 1, 3 | 310 | 350kcmil - 2/0 Cu/Al (Str) | 1 | 31.1 (275)† | 1 | 4 - 6 Cu/Al (Str) | 1 | 4.0 (35) | 6 | 200 | PDB323-_ |
| | | | | | | | 8 Al (Str) | 1-2 | | | | |
| | | | 1/0 Cu/Al (Str) | 1-2 | | | 8 Cu | 1 | 2.8 (25) | | | |
| | | | | | | | 10 - 12 Al (Str) | 1 | 4.0 (35) | | | |
| | | | 1 - 6 Cu/Al | 1-2 | | | 10 - 12 Cu | 1 | 2.3 (20) | | | |
| | | | | | | | 10 - 14 Cu | 2 | | | | |
| 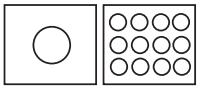 | 1, 3 | 310 | 350kcmil - 2/0 Cu/Al (Str) | 1 | 31.1 (275)† | 1 | 4 - 6 Cu/Al (Str) | 1 | 4.0 (35) | 12 | 200 | PDB370-_ |
| | | | 1/0 Cu/Al (Str) | 1-2 | | | 8 Al (Str) | 1-2 | | | | |
| | | | | | | | 8 Cu | 1 | 2.8 (25) | | | |
| | | | 1 - 6 Cu/Al | 1-2 | | | 10 - 12 Al (Str) | 1 | 4.0 (35) | | | |
| | | | | | | | 10 - 14 Cu | 1-2 | 2.3 (20) | | | |
| 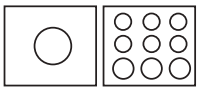 | 1, 3 | 310 | 350kcmil - 2/0 Cu/Al (Str) | 1 | 31.1 (275)† | 1 | 2 - 3 Cu/Al (Str) | 1 | 5.6 (50) | 6 | 200 | PDB371-_ |
| | | | | | | | 4 - 8 Al (Str) | 1 | | | | |
| | | | | | | | 6 - 8 Al (Str) | 2 | | | | |
| | | | | | | | 4 Cu | 1 | 5.1 (45) | | | |
| | | | | | | | 6 Cu | 1-2 | | | | |
| | | | 1/0 Cu/Al (Str) | 1-2 | | | 8 Cu | 1-2 | 4.5 (40) | | | |
| | | | | | | | 10 - 12 Cu | 1-2 | 4.0 (35) | | | |
| | | | | | | | 14 Cu | 2 | | | | |
| | | | | | | | 1/0 - 3 Cu/Al (Str) | 1 | 5.6 (50) | 3 | | |
| | | | | | | | 4 - 6 Cu/Al | 1 | 5.1 (45)†† | | | |
| | | | | | | | 8 Cu/Al | 1 | 4.5 (40)†† | | | |
| | | | 1 - 6 Cu/Al | 1-2 | | | 10 - 12 Cu | 1 | 4.0 (35)†† | | | |
| | | | | | | | 6 - 14 Cu | 2 | 13.6 (120) | | | |
| | | | | | | | 4 - 6 Al (Str) | 2 | | | | |

* 75°C wire (higher temperature rated wire acceptable with appropriate derating). Using a ferrule on a stranded conductor requires a correctly sized UL Listed ferrule (customer supplied) applied according to the manufacturer's specifications. Ferrule ratings apply to copper wire only.
**See page 9-8 for the tested upstream overcurrent protective devices necessary for achieving these SCCRs.
† Torque rating for dual wire and ferrule application is 30.5 N•m (270 lb-in).
††Torque rating for ferrule application is 13.6 N•m (120 lb-in).

## Upstream fusing for SCCR and minimum enclosure data

This table contains the tested SCCR levels for each PDBFS power distribution block using the specified lineside and loadside conductors and Bussmann series Class J, RK1, RK5 and T fuses. Using these tested SCCR levels also requires the power distribution block be installed in an enclosure with the minimum size indicated for each catalog number.

| | Conductors (AWG/kcmil) | | Fuse class and maximum amps* | | | | | | |
|---|---|---|---|---|---|---|---|---|---|
| Catalog no. | Lineside | Loadside | G — SC (480 V) | J — LPJ | RK1 — LPN-RK (250 V), LPS-RK (600 V) | RK5 — FRN-R (250 V), FRS-R (600 V) | T — JJN (300 V), JJS (600 V) | SCCR (kA) | Min. enclosure size (in) |
| PDB204-1, -3 | 2/0 - 8 | 2/0 - 8 | — | 200 | 100 | 60 | 200 | 200 | 16 x 16 x 6.75 |
| PDB220-1, -3 | 2/0 - 8 | 4 - 12 | — | 200 | 100 | 60 | 200 | 200 | 16 x 16 x 6.75 |
| | | 4 - 14 | 60 | 175 | 100 | 30 | 175 | 100 | |
| PDB280-1, -3 | 2/0 - 8 | Stud | — | 200 | 100 | 60 | 200 | 200 | 16 x 16 x 6.75 |
| PDB321-1, -2, -3 | 2/0 - 8 | 4 - 12 | — | 400 | 200 | 100 | 400 | 200 | 24 x 20 x 6.75 |
| | | 4 - 14 | 60 | 175 | 100 | 30 | 175 | 100 | |
| PDB323-1, -3 | 350 - 4 | 4 - 8 | — | 400 | 200 | 100 | 400 | 200 | 24 x 20 x 6.75 |
| | | 4 - 12 | 60 | 175 | 100 | 30 | 175 | 100 | |
| PDB370-1, -3 | 350 - 4 | 4 - 8 | — | 400 | 200 | 100 | 400 | 200 | 24 x 20 x 6.75 |
| | | 4 - 14 | 60 | 175 | 100 | 30 | 175 | 100 | |
| PDB371-1, -3 | 350 - 4 | 1/0 - 6 | — | 400 | 200 | 100 | 400 | 200 | 24 x 20 x 6.75 |
| | | 1/0 - 12 | 60 | 175 | 100 | 30 | 175 | 100 | |

Ampacities 75°C per NEC Table 310.16 and UL 508A Table 28.1.
* Class CC 30 A (LP-CC-30, FNQ-R-30, KTK-R-30) or less are suitable for all SCCRs in this table.

## Upstream circuit breakers for SCCR and minimum enclosure data

This table contains the tested SCCR levels for each PDB power distribution block using the specified lineside and loadside conductors and Eaton circuit breakers. Using these tested SCCR levels also requires the power distribution block be installed in an enclosure with the minimum size indicated for each catalog number.

### PDB_ SCCR as rated with Eaton circuit breakers

| | Suitable Cu conductors kcmil/AWG | | | | Overcurrent protection circuit breaker required | | Min. enclosure size (in.) |
|---|---|---|---|---|---|---|---|
| Catalog no. | Lineside | Loadside | SCCR, RMS Sym. (kA) | Volts max | Type | Max amp | |
| PDB220 | 2/0 - 8 | 4 - 10 | 65 | 480 | EGC125, E125C, EGH125, E125H | 125 | 16 x 16 x 6.75 |
| | 2/0 - 8 | 12 | 22 | 480 | EGC125, E125C, EGE125, E125E, EGS125, E125S, EGH125, E125H | 125 | |
| | 2/0 - 8 | 14 | 14 | 480 | EGC125, E125C, EGB125, E125B, EGE125, E125E, EGS125, E125S, EGH125, E125H | 125 | |
| PDB321 | 2/0 - 8 | 4 - 10 | 65 | 480 | EGC125, E125C, EGH125, E125H | 125 | 24 x 20 x 6.75 |
| | 2/0 - 8 | 12 | 22 | 480 | EGC125, E125C, EGE125, E125E, EGS125, E125S, EGH125, E125H | 125 | |
| | 2/0 - 8 | 14 | 14 | 480 | EGC125, E125C, EGB125, E125B, EGE125, E125E, EGS125, E125S, EGH125, E125H | 125 | |
| PDB323 | 350 - 4 | 4 - 6 | 65 | 480 | JGH250, J250H | 250 | 24 x 20 x 6.75 |
| | 350 - 4 | 8 | 42 | 480 | JGH250, J250H | 250 | |
| | 350 - 4 | 10 | 14 | 480 | JGH250, J250H, JGE250, J250E, JGS250, J250S, | 250 | |
| | 350 - 4 | 4 - 6 | 65 | 480 | JGC250, J250C, JGU250, J250U, JGX250, J250X | 250 | |
| | | 8 | 42 | | | | |
| | | 10 | 25 | | | | |
| | | 8 | 50 | | | | |
| | | 10 | 25 | | | | |
| PDB370 | 350 - 4 | 4 - 6 | 65 | 480 | JGH250, J250H | 250 | 24 x 20 x 6.75 |
| | 350 - 4 | 8 | 42 | 480 | JGH250, J250H | 250 | |
| | 350 - 4 | 10 | 14 | 480 | JGH250, J250H, JGE250, J250E, JGS250, J250S, | 250 | |
| | 350 - 4 | 4 - 6 | 65 | 480 | JGC250, J250C, JGU250, J250U, JGX250, J250X | 250 | |
| | | 8 | 42 | | | | |
| | | 10 | 25 | | | | |
| PDB371 | 350 - 4 | 4 - 6 | 50 | 480 | JGH250, J250H | 250 | 24 x 20 x 6.75 |
| | 350 - 4 | 8 | 42 | 480 | JGH250, J250H | 250 | |
| | 350 - 4 | 10 | 14 | 480 | JGH250, J250H, JGE250, J250E, JGS250, J250S, | 250 | |
| | 350 - 4 | 4 - 6 | 65 | 480 | JGC250, J250C, JGU250, J250U, JGX250, J250X | 250 | |
| | | 8 | 50 | | | | |
| | | 10 | 25 | | | | |

**Data sheet no. 10537**

## 160, 162, 163, 164 and 165 UL Recognized open power distribution blocks

UL Recognized power distribution blocks offer a variety of lineside and loadside port configurations for greater flexibility in panel wiring and wire management.

These blocks are UL Recognized to UL 1059 and rated for use in UL 508A industrial control panels.

Blocks are factory configured in 1-, 2 and 3-pole versions, and have optional covers to enhance safety (order covers separately).

### Ratings

- Volts 600 V
- Amps 175 to 1520 A
- SCCR up to 200 kA* (see table for SCCR by catalog number)

* Maximum SCCR contingent upon the application of an upstream current-limiting overcurrent protective device. See table for fusing requirements.

### Conductors†

- Stranded 75°C copper and aluminum
- Higher temperature rated conductors permitted with appropriate derating

† As specified in the catalog number table.

### Agency information

- UL 1059 Recognized, Guide XCFR2, File E62622
- CSA Certified, Class 6228-01, File 15364

### Flammability rating

- UL 94 V0

### Optional covers

- See table for catalog numbers and ordering details

### How to order

From the catalog number tables, select the catalog number that defines the desired lineside/loadside port and conductor characteristics.

Add to the catalog number the suffix that defines the desired pole configuration. Note, you must select from the available number of poles for each catalog number. These appear in the second column of the catalog number tables.

### Catalog number example — 16220-3 is a 3-pole 16220

Where:

- The prefix "16220" defines the block's lineside characteristics (i.e., one conductor port per pole that accepts 2/0 - 14 Cu, or 2/0 - 8 Al conductors) and the loadside characteristics (i.e., four conductor ports per pole that each accepts 4 - 14 Cu or 4 - 8 Al conductors)
- The suffix "3" in this example defines this as a three-pole block
- See the catalog number tables for details on the available lineside/loadside characteristics

### Dual wire port application

- Rated for dual wire port application to increase the possible number of lineside and loadside connections. E.g., 16220-1 can accept two wires into the lineside port (4 - 14 Cu, 4 - 8 Al) and two wires per port (eight connections total) on the loadside lug (8 - 14 Cu, 8 Al).
- Dual wire applications are only viable when using two wires of the same size, stranding, and insulating and conductor material.

### Ferrule terminal application

- Bussmann series UL Recognized power distribution blocks are rated for use with UL Listed ferrules (see catalog number table for details).
- Ferrule applications allow for the use of a broader range of conductor stranding and simulate a more efficient, solid wire connection with the terminal port.
- Always use UL Listed ferrules in accordance with the manufacturer's specifications and instructions.

### Optional covers

| For block catalog number starting | Order cover catalog number |
|---|---|
| 160__ | CPB160-(poles)* |
| 162__ | CPB162-(poles)* |
| 163__ | CPDB-(poles)* |
| 165__ | CPDB165** |

* Order one cover for each block by specifying the number of poles in the catalog number suffix. E.g., For the block catalog number 16021-4, order the cover catalog number CPD160-4.

** Order one cover for each of the block's poles. E.g., For block catalog number 16530-3, order three of cover catalog number CPDB165.

| Line/load port configuration | No. of poles | Current rating (A) | Lineside Wire size (Sol/ferrule unless noted)* | Lineside Wires per port | Lineside Torque N•m (lb-in) | Lineside Ports/pole | Loadside Wire size (Sol/ferrule unless noted)* | Loadside Wires per port | Loadside Torque N•m (lb-in) | Loadside Ports/pole | Max SCCR (kA)† | Catalog no. |
|---|---|---|---|---|---|---|---|---|---|---|---|---|
| 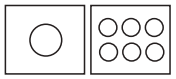 | 2, 3, 4 | 175 | 2/0 - 1 Cu/Al (Str) | 1 | 13.6 (120) | 1 | 4 - 6 Cu/Al (Str) | 1 | 4.0 (35) | 6 | 10 | 16021-_ |
| | | | 2 - 3 Cu/Al | 1 | | | 8 Cu | 1 | 2.8 (25) | | | |
| | | | 4 - 8 Cu/Al | 1-2 | | | 8 Al (Str) | 1-2 | | | | |
| | | | 10 - 14 Cu | 1-2 | | | 10 - 14 Cu | 1-2 | 2.3 (20) | | | |
| 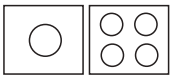 | 1, 2, 3 | 175 | 2/0 - 1 Cu/Al (Str) | 1 | 13.6 (120) | 1 | 4 - 6 Cu/Al (Str) | 1 | 4.0 (35) | 4 | 200 | 16220-_ |
| | | | 2 - 3 Cu/Al | 1 | | | 8 Cu | 1 | 2.8 (25) | | | |
| | | | 4 - 8 Cu/Al | 1-2 | | | 8 Al (Str) | 1-2 | | | | |
| | | | 10 - 14 Cu | 1-2 | | | 10 - 14 Cu | 1-2 | 2.3 (20) | | | |
| | 1, 2, 3 | 175 | 2/0 - 1 Cu/Al (Str) | 1 | 13.6 (120) | 1 | 4 - 6 Cu/Al (Str) | 1 | 4.0 (35) | 4 | 200 | 16220-_H††† |
| | | | 2 - 3 Cu/Al | 1 | | | 8 Cu | 1 | 2.8 (25) | | | |
| | | | 4 - 8 Cu/Al | 1-2 | | | 8 Al (Str) | 1-2 | | | | |
| | | | 10 - 14 Cu | 1-2 | | | 10 - 14 Cu | 1-2 | 2.3 (20) | | | |
| 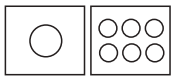 | 1, 2, 3 | 175 | 2/0 - 1 Cu/Al (Str) | 1 | 13.6 (120) | 1 | 4 - 6 Cu/Al (Str) | 1 | 4.0 (35) | 6 | 200 | 16321-_ |
| | | | 2 - 3 Cu/Al | 1 | | | 8 Cu | 1 | 2.8 (25) | | | |
| | | | 4 - 8 Cu/Al | 1-2 | | | 8 Al (Str) | 1-2 | | | | |
| | | | 10 - 14 Cu | 1-2 | | | 10 - 14 Cu | 1-2 | 2.3 (20) | | | |
| 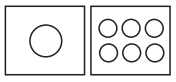 | 2,3,4 | 310 | 350kcmil - 2/0 Cu/Al (Str) | 1 | 31.1 (275)†† | 1 | 4 - 6 Cu/Al (Str) | 1 | 4.0 (35) | 6 | 10 | 16023-_ |
| | | | 1/0 Cu/Al (Str) | 1-2 | | | 8 Cu | 1 | 2.8 (25) | | | |
| | | | | | | | 8 Al (Str) | 1-2 | | | | |
| | | | 1 - 6 Cu/Al | 1-2 | | | 10 - 12 Al (Str) | 1 | 2.3 (20) | | | |
| | | | | | | | 10 - 14 Cu | 1-2 | | | | |
| 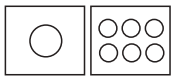 | 1, 2, 3 | 310 | 350kcmil - 2/0 Cu/Al (Str) | 1 | 31.1 (275)†† | 1 | 4 - 6 Cu/Al (Str) | 1 | 4.0 (35) | 6 | 200 | 16323-_ |
| | | | 1/0 Cu/Al (Str) | 1-2 | | | 8 Cu | 1 | 2.8 (25) | | | |
| | | | | | | | 8 Al (Str) | 1-2 | | | | |
| | | | 1 - 6 Cu/Al | 1-2 | | | 10 - 12 Al (Str) | 1 | 2.3 (20) | | | |
| | | | | | | | 10 - 14 Cu | 1-2 | | | | |
| 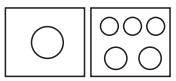 | 1, 2, 3 | 310 | 350kcmil - 2/0 Cu/Al (Str) | 1 | 31.1 (275)†† | 1 | 2 - 3 Cu/Al (Str) | 1 | 5.6 (50) | 3 | 10 | 16332-_ |
| | | | | | | | 4 Cu/Al | 1 | 5.1 (45) | | | |
| | | | | | | | 6 Cu/Al | 1-2 | | | | |
| | | | | | | | 8 Cu/Al | 1-2 | 4.5 (40) | | | |
| | | | | | | | 10 - 14 Cu | 1-2 | 4.0 (35) | | | |
| | | | 1/0 Cu/Al (Str) | 1-2 | | | 1/0 - 3 Cu/Al (Str) | 1 | 13.6 (120) | 2 | | |
| | | | | | | | 4 Cu | 1 | | | | |
| | | | | | | | 4 - 8 Al (Str) | 1-2 | | | | |
| | | | 1 - 6 Cu/Al | 1-2 | | | 6 - 14 Cu | 1-2 | | | | |
| 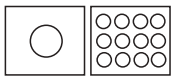 | 1, 2, 3 | 310 | 350kcmil - 2/0 Cu/Al (Str) | 1 | 31.1 (275)†† | 1 | 4 - 6 Cu/Al (Str) | 1 | 4.0 (35) | 12 | 200 | 16370-_ |
| | | | 1/0 Cu/Al (Str) | 1-2 | | | 8 Cu | 1 | 2.8 (25) | | | |
| | | | | | | | 8 Al (Str) | 1-2 | | | | |
| | | | 1 - 6 Cu/Al | 1-2 | | | 10 - 12 Al (Str) | 1 | 2.3 (20) | | | |
| | | | | | | | 10 - 14 Cu | 1-2 | | | | |
| 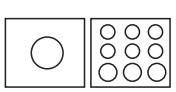 | 1, 2, 3 | 310 | 350kcmil - 2/0 Cu/Al (Str) | 1 | 31.1 (275)†† | 1 | 2 - 3 Cu/Al (Str) | 1 | 5.6 (50) | 6 | 200 | 16371-_ |
| | | | | | | | 4 - 6 Cu/Al (Str) | 1 | 5.1 (45) | | | |
| | | | | | | | 8 Cu/Al (Str) | 1 | 4.5 (40) | | | |
| | | | | | | | 10 - 14 Cu (Str) | 1 | 4.0 (35) | | | |
| | | | 1/0 Cu/Al (Str) | 1-2 | | | 1/0 - 3 Cu/Al (Str) | 1 | 13.6 (120) | 3 | | |
| | | | | | | | 4 - 8 Cu/Al | 1 | | | | |
| | | | | | | | 10 - 14 Cu | 1 | | | | |
| | | | 1 - 6 Cu/Al | 1-2 | | | 6 - 14 Cu | 2 | | | | |
| | | | | | | | 4 - 8 Al (Str) | 2 | | | | |
| 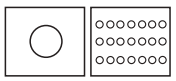 | 1, 2, 3 | 310 | 350kcmil - 2/0 Cu/Al (Str) | 1 | 31.1 (275)†† | 1 | 10 Cu/Al | 1 | 0.8 (7) | 21 | 10 | 16372-_ |
| | | | 1/0 Cu/Al (Str) | 1-2 | | | 12 - 14 Cu | 1 | | | | |
| | | | 1 - 6 Cu/Al | 1-2 | | | | | | | | |

* 75°C wire (higher temperature rated wire acceptable with appropriate derating). Using a ferrule on a stranded conductor requires a correctly sized UL Listed ferrule (customer supplied) applied according to the manufacturer's specifications. Ferrule ratings apply to copper wire only.
** Not covered by CSA certification.
† See Short-Circuit Current Ratings table for the tested upstream overcurrent protective devices necessary for achieving these SCCRs.
†† Torque rating for dual wire and ferrule application is 30.5 N•m (270 lb-in).
††† Configuration includes hex screws.

**Data sheet no. 10533**

| Line/load port configuration | No. of poles | Current rating (A) | Lineside: Wire size (Sol/ferrule unless noted)* | Lineside: Wires per port | Lineside: Torque N•m (lb-in) | Lineside: Ports/pole | Loadside: Wire size (Sol/ferrule unless noted)* | Loadside: Wires per port | Loadside: Torque N•m (lb-in) | Loadside: Ports/pole | Max SCCR (kA)† | Catalog no. |
|---|---|---|---|---|---|---|---|---|---|---|---|---|
| 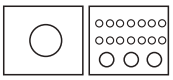 | 1, 2, 3 | 310 | 350kcmil - 2/0 Cu/Al (Str) | 1 | 31.1 (275)†† | 1 | 10 Cu/Al | 1 | 0.8 (7) | 14 | 10 | 16373-_ |
| | | | | | | | 12 - 14 Cu | 1 | | | | |
| | | | 1/0 Cu/Al (Str) | 1-2 | | | 1/0 - 3 Cu/Al (Str) | 1 | 13.6 (120) | 3 | | |
| | | | | | | | 4 Cu | 1 | | | | |
| | | | | | | | 6 - 14 Cu | 1-2 | | | | |
| | | | | | | | 4 - 8 Al (Str) | 1-2 | | | | |
| | | | 1 - 6 Cu/Al | 1-2 | | | 10 - 14 Al (Str) | 1 | | | | |
| 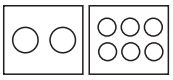 | 1, 2, 3 | 350 | 2/0 - 1 Cu/Al (Str) | 1 | 13.6 (120) | 2 | 4 - 6 Cu/Al (Str) | 1 | 4.0 (35) | 6 | 10 | 16325-_ |
| | | | 2 - 3 Cu/Al | 1 | | | 8 Cu | 1 | 2.8 (25) | | | |
| | | | 4 - 8 Cu/Al | 1-2 | | | 8 Al (Str) | 1-2 | | | | |
| | | | 10 - 14 Cu | 1-2 | | | 10 - 14 Cu | 1-2 | 2.3 (20) | | | |
| 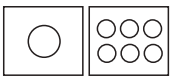 | 1, 2, 3 | 380 | 500kcmil - 4/0 Cu/Al (Str) | 1 | 56.5 (500) | 1 | 2 - 3 Cu/Al (Str) | 1 | 5.6 (50) | 6 | 10 | 16330-_ |
| | | | | | | | 4 Cu/Al | 1 | 5.1 (45) | | | |
| | | | 3/0 - 1/0 Cu/Al (Str) | 1-2 | | | 6 Cu/Al | 1-2 | | | | |
| | | | | | | | 8 Cu/Al | 1-2 | 4.5 (40) | | | |
| | | | 1 - 6 Cu/Al | 1-2 | | | 10 - 12 Al (Str) | 1 | 4.0 (35) | | | |
| | | | | | | | 10 - 14 Cu | 1-2 | | | | |
| 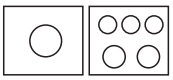 | 1, 2, 3 | 380 | 500kcmil - 4/0 Cu/Al (Str) | 1 | 56.5 (500) | 1 | 2 - 3 Cu/Al (Str) | 1 | 5.6 (50) | 3 | 10 | 16335-_ |
| | | | | | | | 4 Cu/Al | 1 | 5.1 (45) | | | |
| | | | | | | | 6 Cu/Al | 1-2 | | | | |
| | | | 3/0 - 1/0 Cu/Al (Str) | 1-2 | | | 8 Cu/Al | 1-2 | 4.5 (40) | | | |
| | | | | | | | 10 - 14 Cu | 1-2 | 4.0 (35) | | | |
| | | | 1 - 6 Cu/Al | 1-2 | | | 1/0 - 3 Cu/Al (Str) | 1 | 13.6 (120) | 2 | | |
| | | | | | | | 4 Cu | 1 | | | | |
| | | | | | | | 4 - 8 Al (Str) | 1-2 | | | | |
| | | | | | | | 6 - 14 Cu | 1-2 | | | | |
| 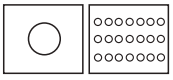 | 1, 2, 3 | 380 | 500kcmil - 4/0 Cu/Al (Str) | 1 | 56.5 (500) | 1 | 6 Cu/Al (Str) | 1 | 4.0 (35) | 21 | 10 | 16541-_ |
| | | | 3/0 - 1/0 Cu/Al (Str) | 1-2 | | | 8 Cu | 1 | 2.8 (25) | | | |
| | | | | | | | 8 Al (Str) | 1-2 | | | | |
| | | | 1 - 6 Cu/Al | 1-2 | | | 10 - 14 Al (Str) | 1 | 2.3 (20) | | | |
| | | | | | | | 10 - 14 Cu | 1-2 | | | | |
| 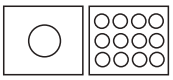 | 1, 2, 3 | 420 | 600kcmil - 2 Cu/Al (Str) | 1 | 56.5 (500) | 1 | 4 - 6 Cu/Al (Str) | 1 | 4.0 (35) | 12 | 10 | 16375-_ |
| | | | | | | | 8 Cu | 1 | 2.8 (25) | | | |
| | | | | | | | 8 Al (Str) | 1-2 | | | | |
| | | | | | | | 10 - 12 Al (Str) | 1 | 2.3 (20) | | | |
| | | | | | | | 10 - 14 Cu | 1-2 | | | | |

* 75°C wire (higher temperature rated wire acceptable with appropriate derating). Using a ferrule on a stranded conductor requires a correctly sized UL Listed ferrule (customer supplied) applied according to the manufacturer's specifications. Ferrule ratings apply to copper wire only.
† See Short-Circuit Current Ratings table for the tested upstream overcurrent protective devices necessary for achieving these SCCRs.
††Dual wire and ferrule application torque rating = 30.5 N•m (270 lb-in).

## Short-Circuit Current Rating (SCCR) data

| Catalog no. | No. of poles | Conductors (AWG/kcmil): Lineside | Conductors (AWG/kcmil): Loadside | Fuse Class/Bussmann series symbol/amp rating: J — LPJ | RK1 — LPN-RK (250 V), LPS-RK (600 V) | RK5 — FRN-R (250 V), FRS-R (600 V) | T — JJN (300 V), JJS (600 V) | SCCR (kA) |
|---|---|---|---|---|---|---|---|---|
| 16220-_ | 1, 2, 3 | 2/0 - 8 | 4 - 12 | 200 | 200 | 60 | 200 | 200 |
| | | | 4 - 14 | 175 | 100 | 60 | 175 | 100 |
| 16321-_ | 1, 2, 3 | 2/0 - 8 | 4 - 12 | 400 | 200 | 100 | 400 | 200 |
| | | | | 175 | 100 | 60 | 175 | 100 |
| 16323-_ | 1, 2, 3 | 350 - 4 | 4 - 8 | 400 | 200 | 100 | 400 | 200 |
| | | | 4 - 12 | 175 | 100 | 60 | 175 | 100 |
| 16370-_ | 1, 2, 3 | 350 - 4 | 4 - 8 | 400 | 200 | 100 | 400 | 200 |
| | | | 4 - 14 | 175 | 100 | 60 | 175 | 100 |
| 16371-_ | 1, 2, 3 | 350 - 4 | 1/0 - 6 | 400 | 200 | 100 | 400 | 200 |
| | | | 1/0 - 12 | 175 | 100 | 60 | 175 | 100 |

| Line/load port configuration | No. of poles | Current rating (A) | Lineside Wire size (Str/ferrule unless noted)* | Lineside Wires per port | Lineside Torque N•m (lb-in) | Lineside Ports/ pole | Loadside Wire size (Str/ferrule unless noted)* | Loadside Wires per port | Loadside Torque N•m (lb-in) | Loadside Ports/ pole | Max SCCR (kA)† | Catalog no. |
|---|---|---|---|---|---|---|---|---|---|---|---|---|
| 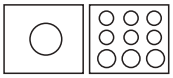 | 1, 2, 3 | 420 | 600kcmil - 2 Cu/Al (Str) | 1 | 56.5 (500) | 1 | 2 - 3 Cu/Al (Str) | 1 | 5.6 (50) | 6 | 10 | 16376-_ |
| | | | | | | | 4 Cu/Al | 1 | 5.1 (45) | | | |
| | | | | | | | 6 Cu/Al | 1-2 | | | | |
| | | | | | | | 8 Cu/Al | 1-2 | 4.5 (40) | | | |
| | | | | | | | 10 - 14 Cu | 1-2 | 4.0 (35) | | | |
| | | | | | | | 1/0 - 3 Cu/Al (Str) | 1 | 13.6 (120) | 3 | | |
| | | | | | | | 4 Cu | 1 | | | | |
| | | | | | | | 6 - 14 Cu | 1-2 | | | | |
| | | | | | | | 4 - 8 Al (Str) | 1-2 | | | | |
| 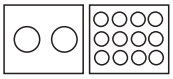 | 1, 2, 3 | 570 | 300kcmil - 2/0 Cu/Al (Str) | 1 | 31.1 (275)†† | 2 | 4 - 6 Cu/Al (Str) | 1 | 4.0 (35) | 12 | 10 | 16377-_ |
| | | | 1/0 Cu/Al (Str) | 1-2 | | | 8 Cu | 1 | 2.8 (25) | | | |
| | | | 1 - 2 Cu/Al | 1-2 | | | 8 Al (Str) | 1-2 | | | | |
| | | | 4 Cu/Al (Str) | 1-2 | | | 10 - 12 Al (Str) | 1 | 2.3 (20) | | | |
| | | | | | | | 10 - 14 Cu | 1-2 | | | | |
| 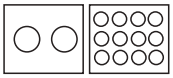 | 1, 2, 3 | 760 | 500kcmil - 4/0 Cu/Al (Str) | 1 | 56.5 (500) | 2 | 4 - 6 Cu/Al (Str) | 1 | 4.0 (35) | 12 | 10 | 16530-_ |
| | | | 3/0 - 1/0 Cu/Al (Str) | 1-2 | | | 8 Cu | 1 | 2.8 (25) | | | |
| | | | | | | | 8 Al (Str) | 1-2 | | | | |
| | | | 1 - 6 Cu/Al | 1-2 | | | 10 - 14 Al (Str) | 1 | 2.3 (20) | | | |
| | | | | | | | 10 - 14 Cu | 1-2 | | | | |
| 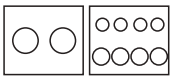 | 1, 2, 3 | 840 | 600kcmil - 2 Cu/Al | 1 | 56.5 (500) | 2 | 3/0 - 6 Cu/Al (Str) | 1 | 13.6 (120) | 4 | 10 | 16528-_ |
| | | | | | | | 4 - 6 Cu/Al (Str) | 1 | 4.0 (35) | 4 | | |
| | | | | | | | 8 Cu | 1 | 2.8 (25) | | | |
| | | | | | | | 8 Al (Str) | 1-2 | | | | |
| | | | | | | | 10 - 14 Al (Str) | 1 | 2.3 (20) | | | |
| | | | | | | | 10 - 14 Cu | 1-2 | | | | |
| 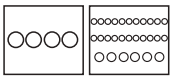 | 1 | 1520 | 500kcmil - 4/0 Cu/Al (Str) | 1 | 56.5 (500) | 4 | 2 - 3 Cu/Al (Str) | 1 | 5.6 (50) | 22 | 10 | 16400 |
| | | | | | | | 4 Cu/Al | 1 | 5.1 (45) | | | |
| | | | | | | | 6 Cu/Al | 1-2 | | | | |
| | | | | | | | 8 Cu/Al | 1-2 | 4.5 (40) | | | |
| | | | 3/0 - 1/0 Cu/Al (Str) | 1-2 | | | 10 - 14 Cu | 1-2 | 4.0 (35) | | | |
| | | | | | | | 1/0 - 3 Cu/Al (Str) | 1 | 13.6 (120) | 6 | | |
| | | | | | | | 4 Cu | 1 | | | | |
| | | | 1 - 6 Cu/Al | 1-2 | | | 4 - 8 Al (Str) | 1-2 | | | | |
| | | | | | | | 6 - 14 Cu | 1-2 | | | | |

* 75°C wire (higher temperature rated wire acceptable with appropriate derating). Using a ferrule on a stranded conductor requires a correctly sized UL Listed ferrule (customer supplied) applied according to the manufacturer's specifications. Ferrule ratings apply to copper wire only.
† See Short-Circuit Current Ratings table for the tested upstream overcurrent protective devices necessary for achieving these SCCRs.
††Dual wire and ferrule application torque rating = 30.5 N•m (270 lb-in).

**Data sheet no. 10533**

## 162, 163 and 165 UL Recognized stud power terminal blocks

Port-to-stud and stud-to-stud power terminal blocks are available with current ratings up to 760 A. These blocks provide a convenient stud connection means for lug/ring wire terminals.

Factory configured from 1- to 3-poles (catalog number dependent) with optional covers to enhance safety (order covers separately), these blocks are UL Recognized to UL 1059 and rated for use in UL 508A industrial control panels.

### Ratings

- Volts 600 V
- Amps 150 up to 760 A
- SCCR up to 200 kA* (see table for SCCR by catalog number)

* Maximum SCCR contingent upon the application of an upstream current-limiting overcurrent protective device. See table for fusing requirements.

### Conductors†

- Stranded 75°C copper and aluminum
- Higher temperature rated conductors permitted with appropriate derating

† As specified in the catalog number table.

### Agency information

- UL 1059 Recognized, Guide XCFR2, File E62622
- CSA Certified, Class 6228-01, File 15364

### Flammability rating

- UL 94 V0

### Optional covers

- See table for catalog numbers specific to each block

### How to order

From the catalog number tables, select the catalog number that defines the desired lineside/loadside port and conductor characteristics.

Add to the catalog number the suffix that defines the desired pole configuration. Note, you must select from the available number of poles for each catalog number. These appear in the second column of the catalog number tables.

### Catalog number example — 16280-3 is a 3-pole 16280

Where:

- The prefix "16280" defines the block's lineside characteristics (i.e., one conductor port per pole that accepts 2/0 - 14 Cu/Al conductors) and the loadside characteristics (i.e., 1/4-20 x 3/4" stud)
- The suffix "3" in this example defines this as a three-pole block
- See the catalog number tables for details on the available lineside/loadside characteristics

### Dual wire port application

- Rated for dual wire port application to increase the possible number of lineside and loadside connections. E.g., 16280-1 can accept two wires into the lineside port (#4 - #8 Cu/Al, #10 - #14 Cu).
- Dual wire applications are only viable when using two wires of the same size, stranding, and insulating and conductor material in the same port

### Ferrule terminal application

- Bussmann series stud blocks are rated for use with UL Listed ferrules (see catalog number table for details). Ferrule ratings apply to copper wire only.
- Ferrule applications allow for the use of a broader range of conductor stranding and simulate a more efficient, solid wire connection with the terminal port
- Always use UL Listed ferrules in accordance with the manufacturer's specifications and instructions

### Optional covers

Electrical safety can be enhanced by installing optional covers. From the table below, order the cover catalog number that matches the block catalog number.

| Block catalog no. | Poles | Cover catalog no. |
|---|---|---|
| 16280-1 | 1 | CPB162-1* |
| 16280-2 | 2 | CPB162-2* |
| 16280-3 | 3 | CPB162-3* |
| 16280-2-M | 2 | CPB162-2* |
| 16280-3-M | 3 | CPB162-3* |
| 16281-1 | 1 | CPB162-1* |
| 16281-2 | 2 | CPB162-2* |
| 16281-3 | 3 | CPB162-3* |
| 16290-1 | 1 | CPB162-1* |
| 16290-2 | 2 | CPB162-2* |
| 16290-3 | 3 | CPD162-3* |
| 16378-1 | 1 | CPDB-1* |
| 16378-2 | 2 | CPDB-2* |
| 16378-3 | 3 | CPDB-3* |
| 16383-1 | 1 | CPDB-1* |
| 16383-2 | 2 | CPDB-2* |
| 16383-3 | 3 | CPDB-3* |
| 16390-1 | 1 | CPDB-1* |
| 16390-2 | 2 | CPDB-2* |
| 16390-3 | 3 | CPDB-3* |
| 16392-1-H | 1 | CPDB-1* |
| 16392-2-H | 2 | CPDB-2* |
| 16392-3-H | 3 | CPDB-3* |
| 16394-1 | 1 | CPDB-1* |
| 16394-2 | 2 | CPDB-2* |
| 16394-3 | 3 | CPDB-3* |
| 16395-1 | 1 | CPDB-1* |
| 16395-2 | 2 | CPDB-2* |
| 16395-3 | 3 | CPDB-3* |
| 16582-1 | 1 | CPDB165** |
| 16582-2 | 2 | CPDB165** |
| 16582-3 | 3 | CPDB165** |
| 16591-1 | 1 | CPDB165** |
| 16591-2 | 2 | CPDB165** |
| 16591-3 | 3 | CPDB165** |
| 16593-1 | 1 | CPDB165** |
| 16593-2 | 2 | CPDB165** |
| 16593-3 | 3 | CPDB165** |

* Cover catalog number provides one individual cover for each block.
**Order one cover for each pole.

| Line/load configuration | No. of poles | Current rating (A) | Lineside: Wire/stud size (Str/ferrule unless noted)* | Lineside: Wires per port | Lineside: Torque N•m (lb-in) | Lineside: Ports/ pole | Loadside: Stud/ connector size | Loadside: Studs/ pole | SCCR (kA) | Catalog no. |
|---|---|---|---|---|---|---|---|---|---|---|
| **Connector - to - stud** | | | | | | | | | | |
| 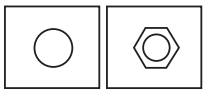 | 1, 2, 3 | 175 | 2/0 - 1 Cu/Al (Str)<br>2 - 3 Cu/Al<br>4 - 8 Cu/Al<br>10 - 14 Cu | 1<br>1-2 | 13.6 (120) | 1 | 1/4-20 x 3/4″ stud | 1 | 200† | 16280-_** |
| 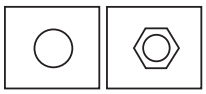 | 2, 3 | 175 | 2/0 - 1 Cu/Al (Str)<br>2 - 3 Cu/Al<br>4 - 8 Cu/Al<br>10 - 14 Cu | 1<br>1-2 | 13.6 (120) | 1 | M6 x 1″ stud | 1 | 200† | 16280-_-M |
| 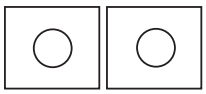 | 1, 2, 3 | 175 | 2/0 - 1 Cu/Al (Str)<br>2 - 3 Cu/Al<br>4 - 8 Cu/Al<br>10 - 14 Cu | 1<br>1-2 | 13.6 (120) | 1 | 1/4-20 tapped hole | 1 | 10 | 16281-_** |
| 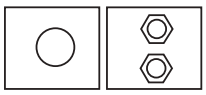 | 1, 2, 3 | 380 | 500kcmil - 4/0 Cu/Al (Str)<br>3/0 - 1/0 Cu/Al (Str)<br>1 - 6 Cu/Al | 1<br>1-2 | 56.5 (500) | 1 | 1/4-20 x 1″ stud | 2 | 10 | 16378-_ |
| 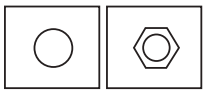 | 1, 2, 3 | 380 | 500kcmil - 4/0 Cu/Al (Str)<br>3/0 - 1/0 Cu/Al (Str)<br>1 - 6 Cu/Al | 1<br>1-2 | 56.5 (500) | 1 | 3/8-16 x 1″ stud | 1 | 10 | 16383-_ |
| 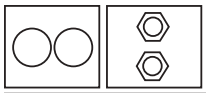 | 1, 2, 3 | 760 | 500kcmil - 4/0 Cu/Al (Str)<br>3/0 - 1/0 Cu/Al (Str)<br>1 - 6 Cu/Al | 1<br>1-2 | 56.5 (500) | 2 | 3/8-16 x 1-5/8″ stud | 2 | 10 | 16582-_ |
| **Stud - to - stud** | | | | | | | | | | |
| 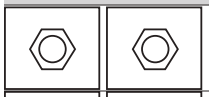 | 1, 2, 3 | 175 | 1/4-20 x 3/4″ stud | | | 1 | 1/4-20 x 3/4″ stud | 1 | 10 | 16290-_** |
| 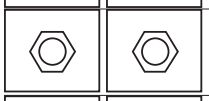 | 1, 2, 3 | 250 | 3/8-16 x 1-1/8″ stud | | | 1 | 3/8-16 x 1-1/8″ stud | 1 | 10 | 16390-_ |
| 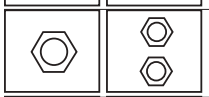 | 1, 2, 3 | 310 | 3/8-16 x 1-7/16″ stud | | | 1 | 1/4-20 x 9/16″ stud | 2 | 10 | 16395-_ |
| 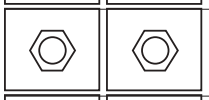 | 1, 2, 3 | 400 | 3/8-16 x 1-1/8″ stud | | | 1 | 3/8-16 x 1-1/8″ stud | 1 | 10 | 16392-_-H†† |
| 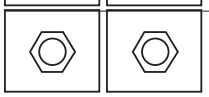 | 1, 2, 3 | 400 | 1/2-13 x 1-1/16″ stud | | | 1 | 1/2-13 x 1-1/16″ stud | 1 | 10 | 16394-_ |
| 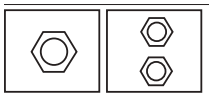 | 1, 2, 3 | 400 | 3/8-16 x 1-7/16″ stud | | | 1 | 3/8-16 x 1-7/16″ stud | 2 | 10 | 16591-_** |
| 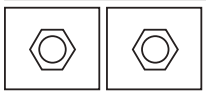 | 1, 2, 3 | 600 | 1/2-13 x 1″ stud | | | 1 | 1/2-13 x 1″ stud | 1 | 10 | 16593-_ |

* 75°C wire (higher temperature rated wire acceptable with appropriate derating). Using a ferrule on a stranded conductor requires a correctly sized UL Listed ferrule (customer supplied) applied according to the manufacturer's specifications. Ferrule ratings apply to copper wire only.
**Not covered by CSA certification.
† See table below for the tested upstream overcurrent protective devices necessary for achieving this SCCR.
††Configuration includes washers and hex nuts for each stud.

## Short-Circuit Current Rating (SCCR) data for block 16280-_

| Catalog no. | No. of poles | Conductors (AWG): Lineside | Conductors (AWG): Loadside | Fuse class/Bussmann series symbol/amp rating: Class J LPJ | Class RK1 LPN-RK (250 V) LPS-RK (600 V) | Class RK5 FRN-R (250 V) FRS-R (600 V) | Class T JJN (300 V) JJS (600 V) | SCCR (kA) |
|---|---|---|---|---|---|---|---|---|
| 16280-_ | 1, 2, 3 | 2/0 - 8 | 1/4-20x3/4 stud | 200 | 200 | 60 | 200 | 200 |

**Data sheet no. 10535**

## 160, 162, 163 and 165 UL Recognized power splicer blocks

Splicer blocks allow for increasing or decreasing wire size within a circuit to accommodate different connections from the power source to the branch load.

These blocks are factory configured from 1- to 4-poles (catalog number dependent) for wire sizes up to 500kcmil and amp ratings up to 760 A. Optional covers are available to enhance safety (order covers separately).

These blocks are UL Recognized to UL 1059 and rated for use in UL 508A industrial control panels.

### Ratings

- Volts 600 V
- Amps 115 to 760 A
- SCCR up to 200 kA* (see table for SCCR by catalog number)

* Maximum SCCR contingent upon the application of an upstream current-limiting overcurrent protective device. See table for fusing requirements.

### Conductors†

- Stranded 75°C copper and aluminum
- Higher temperature rated conductors permitted with appropriate derating

† As specified in the catalog number table.

### Agency information

- UL 1059 Recognized, Guide XCFR2, File E62622
- CSA® Certified, Class 6228-01, File 15364

### Flammability rating

- UL 94 V0

### Optional covers

- See table for catalog numbers specific to each block

### How to order

From the catalog number tables, select the catalog number that defines the desired lineside/loadside port and conductor characteristics.

Add to the catalog number the suffix that defines the desired pole configuration. Note, you must select from the available number of poles for each catalog number. These appear in the second column of the catalog number tables.

### Catalog number example — 16204-3 is a 3-pole 16204

Where:

- The prefix "16204" defines the block's lineside and loadside characteristics (i.e., conductor port per pole that accepts 2/0 - #14 Cu, or 2/0 - #12 Al conductors)
- The suffix "3" in this example defines this as a three-pole block
- See the catalog number tables for details on the available lineside/loadside characteristics

### Dual wire port application

- Rated for dual wire port application to increase the possible number of lineside and loadside connections. E.g., 16303-1 can accept two wires into the lineside port (1/0 - #6 Cu/Al) and two wires per port (2 connections per pole total) on the loadside lug (1/0 - #6 Cu/Al).
- Dual wire applications are only viable when using two wires of the same size, stranding, and insulating and conductor material in the same port.

### Ferrule terminal application

- Bussmann series splicer blocks are rated for use with UL Listed ferrules (see catalog number table for details). Ferrule ratings apply to copper wire only.
- Ferrule applications allow for the use of a broader range of conductor stranding and simulate a more efficient, solid wire connection with the PDB terminal port
- Always use UL Listed ferrules in accordance with the manufacturer's specifications and instructions

### Optional covers

Electrical safety can be enhanced by installing optional covers. From the table below, order the cover catalog number that matches the block catalog number.

| Block catalog no. | Poles | Cover catalog no. |
|---|---|---|
| 16000-2 | 2 | CPB160-2* |
| 16000-3 | 3 | CPB160-3* |
| 16000-4 | 4 | CPB160-4* |
| 16003-2 | 2 | CPB160-2* |
| 16003-3 | 3 | CPB160-3* |
| 16003-4 | 4 | CPB160-4* |
| 16005-2 | 2 | CPB160-2* |
| 16005-3 | 3 | CPB160-3* |
| 16005-4 | 4 | CPB160-4* |
| 16200-1 | 1 | CPB162-1* |
| 16200-2 | 2 | CPB162-2* |
| 16200-3 | 3 | CPB162-3* |
| 16201-1 | 1 | CPB162-1* |
| 16201-2 | 2 | CPB162-2* |
| 16201-3 | 3 | CPB162-3* |
| 16204-1 | 1 | CPB162-1* |
| 16204-2 | 2 | CPB162-2* |
| 16204-3 | 3 | CPD162-3* |
| 16301-1 | 1 | CPDB-1* |
| 16301-2 | 2 | CPDB-2* |
| 16301-3 | 3 | CPDB-3* |
| 16303-1 | 1 | CPDB-1* |
| 16303-2 | 2 | CPDB-2* |
| 16303-3 | 3 | CPDB-3* |
| 16306-1 | 1 | CPDB-1* |
| 16306-2 | 2 | CPDB-2* |
| 16306-3 | 3 | CPDB-3* |
| 16500-1 | 1 | CPDB165** |
| 16500-2 | 2 | CPDB165** |
| 16500-3 | 3 | CPDB165** |
| 16504-1 | 1 | CPDB165** |
| 16504-2 | 2 | CPDB165** |
| 16504-3 | 3 | CPDB165** |

* Cover catalog number provides one individual cover for each block.
**Order one cover for each pole.

**Data sheet no. 10534**

| Line/load port configuration | No. of poles | Current rating (A) | Lineside Wire size (Str/ferrule unless noted)* | Lineside Wires per port | Lineside Torque N•m (lb-in) | Lineside Ports/ Pole | Loadside Wire size (Str/ferrule unless noted)* | Loadside Wires per port | Loadside Torque N•m (lb-in) | Loadside Ports/ pole | SCCR (kA) | Catalog no. |
|---|---|---|---|---|---|---|---|---|---|---|---|---|
| 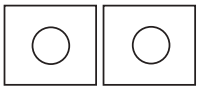 | 1, 2, 3 | 115 | 2 - 3 Cu/Al (Str) | 1 | 5.6 (50) | 1 | 2 - 3 Cu/Al (Str) | 1 | 5.6 (50) | 1 | 10 | 16200-_** |
| | | | 4 - 6 Cu/Al (Str) | 1 | 5.1 (45) | | 4 - 6 Cu/Al (Str) | 1 | 5.1 (45) | | | |
| | | | 8 Cu/Al (Str) | 1 | 4.5 (40) | | 8 Cu/Al (Str) | 1 | 4.5 (40) | | | |
| | | | 10 - 14 Cu (Str) | 1 | 4.0 (35) | | 10 - 14 Cu (Str) | 1 | 4.0 (35) | | | |
| 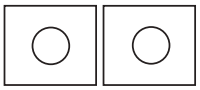 | 1, 2, 3 | 150 | 1/0 - 3 Cu (Str) | 1 | 5.6 (50) | 1 | 1/0 - 3 Cu (Str) | 1 | 5.6 (50) | 1 | 10 | 16201-_ |
| | | | 4 - 6 Cu (Str) | 1 | 5.1 (45) | | 4 - 6 Cu (Str) | 1 | 5.1 (45) | | | |
| | | | 8 Cu (Str) | 1 | 4.5 (40) | | 8 Cu (Str) | 1 | 4.5 (40) | | | |
| | | | 10 - 14 Cu (Str) | 1 | 4.0 (35) | | 10 - 14 Cu (Str) | 1 | 4.0 (35) | | | |
| 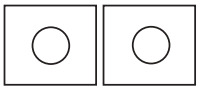 | 2, 3, 4 | 175 | 2/0 - 1 Cu/Al (Str) | 1 | 12.4 (110) | 1 | 2/0 - 1 Cu/Al (Str) | 1 | 12.4 (110) | 1 | 10 | 16000-_** |
| | | | 2 - 8 Cu/Al | 1 | | | 2 - 8 Cu/Al | 1 | | | | |
| | | | 10 - 12 Al (Str) | 1 | 4.0 (35) | | 10 - 12 Al (Str) | 1 | 4.0 (35) | | | |
| | | | 10 - 14 Cu | 1 | | | 10 - 14 Cu | 1 | | | | |
| | | | 4 - 8 Cu/Al | 2 | 13.6 (120) | | 4 - 8 Cu/Al | 2 | 13.6 (120) | | | |
| | | | 10 - 14 Cu | 2 | | | 10 - 14 Cu | 2 | | | | |
| 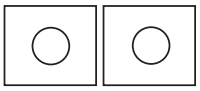 | 1, 2, 3 | 175 | 2/0 - 1 Cu/Al (Str) | 1 | 12.4 (110) | 1 | 2/0 - 1 Cu/Al (Str) | 1 | 12.4 (110) | 1 | 200† | 16204-_ |
| | | | 2 - 8 Cu/Al | 1 | | | 2 - 8 Cu/Al | 1 | | | | |
| | | | 10 - 12 Al (Str) | 1 | 4.0 (35) | | 10 - 12 Al (Str) | 1 | 4.0 (35) | | | |
| | | | 10 - 14 Cu | 1 | | | 10 - 14 Cu | 1 | | | | |
| | | | 4 - 8 Cu/Al | 2 | 13.6 (120) | | 4 - 8 Cu/Al | 2 | 13.6 (120) | | | |
| | | | 10 - 14 Cu | 2 | | | 10 - 14 Cu | 2 | | | | |
| 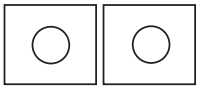 | 2, 3, 4 | 255 | 250kcmil - 6 Cu | 1 | 42.4 (375) | 1 | 250kcmil - 6 Cu | 1 | 42.4 (375) | 1 | 10 | 16003-_** |
| 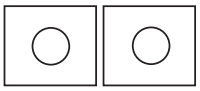 | 1, 2, 3 | 255 | 250kcmil - 6 Cu | 1 | 42.4 (375) | 1 | 250kcmil - 6 Cu | 1 | 42.4 (375) | 1 | 10 | 16301-_ |
| 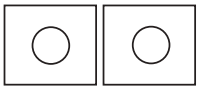 | 2, 3, 4 | 310 | 350kcmil - 2/0 Cu/Al (Str) | 1 | 31.1 (275)†† | 1 | 350kcmil - 2/0 Cu/Al (Str) | 1 | 31.1 (275)†† | 1 | 10 | 16005-_** |
| | | | 1/0 Cu/Al (Str) | 1-2 | | | 1/0 Cu/Al (Str) | 1-2 | | | | |
| | | | 1 - 6 Cu/Al | 1-2 | | | 1 - 6 Cu/Al | 1-2 | | | | |
| | 1, 2, 3 | 310 | 350kcmil - 2/0 Cu/Al (Str) | 1 | 31.1 (275)†† | 1 | 350kcmil - 2/0 Cu/Al (Str) | 1 | 31.1 (275)†† | 1 | 10 | 16303-_ |
| | | | 1/0 Cu/Al (Str) | 1-2 | | | 1/0 Cu/Al (Str) | 1-2 | | | | |
| | | | 1 - 6 Cu/Al | 1-2 | | | 1 - 6 Cu/Al | 1-2 | | | | |
| | 1, 2, 3 | 380 | 500kcmil - 4/0 Cu/Al (Str) | 1 | 56.5 (500) | 1 | 500kcmil - 4/0 Cu/Al (Str) | 1 | 56.5 (500) | 1 | 10 | 16306-_ |
| | | | 3/0 - 1/0 Cu/Al (Str) | 1-2 | | | 3/0 - 1/0 Cu/Al (Str) | 1-2 | | | | |
| | | | 1 - 6 Cu/Al | 1-2 | | | 1 - 6 Cu/Al | 1-2 | | | | |
| 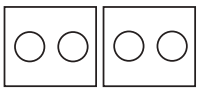 | 1, 2, 3 | 620 | 350kcmil - 2/0 Cu/Al (Str) | 1 | 31.1 (275)†† | 2 | 350kcmil - 2/0 Cu/Al (Str) | 1 | 31.1 (275)†† | 2 | 10 | 16500-_ |
| | | | 1/0 Cu/Al (Str) | 1-2 | | | 1/0 Cu/Al (Str) | 1-2 | | | | |
| | | | 1 - 4 Cu/Al | 1-2 | | | 1 - 4 Cu/Al | 1-2 | | | | |
| | | | 6 Cu/Al | 2 | | | 6 Cu/Al | 2 | | | | |
| 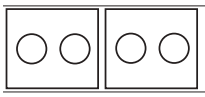 | 1, 2, 3 | 760 | 500kcmil - 4/0 Cu/Al (Str) | 1 | 56.5 (500) | 2 | 500kcmil - 4/0 Cu/Al (Str) | 1 | 56.5 (500) | 2 | 10 | 16504-_ |
| | | | 3/0 - 1/0 Cu/Al (Str) | 1-2 | | | 3/0 - 1/0 Cu/Al (Str) | 1-2 | | | | |
| | | | 1 - 6 Cu/Al | 1-2 | | | 1 - 6 Cu/Al | 1-2 | | | | |

* 75°C wire (higher temperature rated wire acceptable with appropriate derating). Using a ferrule on a stranded conductor requires a correctly sized UL Listed ferrule (customer supplied) applied according to the manufacturer's specifications. Ferrule ratings apply to copper wire only.
**Not covered by CSA certification.
† See table below for the tested upstream overcurrent protective devices necessary for achieving this SCCR.
††Torque rating for dual wire and ferrule application is 30.5 N•m (270 lb-in).

## Short-Circuit Current Rating (SCCR) data for block 16204-_

| Catalog no. | No. of poles | Conductors (AWG) Lineside | Conductors (AWG) Loadside | Fuse class/Bussmann series symbol/amp rating: Class J LPJ | Class RK1 LPN-RK (250 V) LPS-RK (600 V) | Class RK5 FRN-R (250 V) FRS-R (600 V) | Class T JJN (300 V) JJS (600 V) | SCCR (kA) | Min. enclosure size |
|---|---|---|---|---|---|---|---|---|---|
| 16204-_ | 1, 2, 3 | 2/0 - 8 | 2/0 - 8 | 200 | 200 | 60 | 200 | 200 | 16 x 16 x 6.75 |

**Data sheet no. 10534**

## 11675 250 V screw/quick connect power terminal block

Lineside screw connection, loadside 0.250" quick-connect (3 per pole) power terminal block available from 2 to 6 poles (see catalog number table).

### Ratings

- Volts 250 Vac/dc
- Amps Up to 40 A
- SCCR 10 kA per UL 508A, Table SB4.1

### Agency information

- UL Recognized, Guide XCFR2, File E62622, CSA 47235, CE

### Conductors/torque ratings

- 8-14 AWG Cu.
- 9 lb-in (1.0 N•m) max.

| Catalog no. (poles) | | | |
|---|---|---|---|
| 11675-2 | 11675-3 | 11675-4 | 11675-6 |

## 14002 600 V barrier terminal block

Barrier terminal block available from 2 to 6 poles with box lug terminals. 2- and 3-pole versions available with loadside 0.25" quick-connect terminals (4 per pole). See catalog numbers table.

### Ratings

- Volts 600 Vac/dc
- Amps 115 A
- SCCR 10 kA per UL 508A Table SB4.1

### Agency information

- UL Recognized, Guide XCFR2, File E62622, CSA 47235, CE

### Conductors/torque ratings*

- Wire; 2 – 14 AWG Cu, 8 AWG Al.
- Torque; 2-3 AWG 50 (5.6 N•m), 4-6 AWG 45 (5.1 N•m), 8 AWG 40 (4.5 N•m), 10-14 AWG 35 (3.9 N•m)

* Consult factory for torque ratings on "Q" quick-connect terminal option.

### Marking

- Marking strip optional on 2- and 3-pole configurations. See catalog numbers table.

| Catalog no. (poles) | | | |
|---|---|---|---|
| **Standard** | | **Loadside quick-connect terminals** | **Standard with marking strip** |
| 14002-2 | 14002-5 | Q14002-2 | 14002-2A |
| 14002-3 | 14002-6 | Q14002-3 | 14002-3A |
| 14002-4 | | | |

## 11725 600 V screw/quick connect power terminal block

Lineside screw connection, loadside 0.250" quick-connect (4 per pole) power terminal block available in 2, 3 or 4 poles (see catalog number table).

### Ratings

- Volts 600 Vac/dc
- Amps up to 70 A
- SCCR 10 kA per UL 508A Table SB4.1

### Agency Information

- UL Recognized, Guide XCFR2, File E62622, CSA 47235, CE

### Conductors/torque ratings

- 2 – 14 AWG Cu
- 8 AWG Al.
- 45 lb-in (5.1 N•m) max.

| Catalog no. (poles) | | |
|---|---|---|
| 11725-2 | 11725-3 | 11725-4 |

## 14004 600 V dead front terminal block

Dead front terminal block available from 2 to 12 poles (see catalog number table).

### Ratings

- Volts 600 Vac/dc
- Amps 90 A
- SCCR 10 kA per UL 508A Table SB4.1

### Agency information

- UL Recognized, Guide XCFR2, File E62600, CSA 47235, CE

### Conductors

- 4 – 14 AWG Cu
- 8 AWG Al

### Marking

- Numeral marking molded into the top of the block is standard

| Catalog no. (poles) | | | |
|---|---|---|---|
| 14004-2 | 14004-5 | 14004-8 | 14004-12 |
| 14004-3 | 14004-6 | 14004-9 | |
| 14004-4 | 14004-7 | 14004-10 | |

BUSSMANN SERIES

# Calculate available fault current anytime, anywhere

Eaton's Bussmann™ series **FC² Available Fault Current Calculator** is a simple-to-use mobile and web-based application that calculates single- and three-phase system fault current levels.

The free tool is available for all Apple® iPhones, iPads, and Android™ mobile devices and allows you to quickly and easily determine available fault current levels anywhere in an electrical distribution system.

What's more, FC² has English, Spanish and French modes to address local language and equipment marking requirements.

Download today from the Android or Apple store or visit Eaton.com/bussmannseries to learn more.

EATON
BUSSMANN SERIES
FC²

EATON
Powering Business Worldwide

Follow us on social media to get the latest product and support information.

# Connector products to simplify wiring

## Contents


| Description | Section page |
|---|---|
| **Compact rail and panel mount blocks** | |
| NDN DIN-Rail and C-Rail feed through blocks | 2-3 |
| N512, NFT2, NFT3, NC3, NSE3, NSS3 C-Rail feed through blocks | 4-5 |
| 15188, PLU3, PLU1, PSU1 depluggable DIN-Rail and C-Rail blocks | 6-7 |
| KT3, KT4 multi-pole panel mount blocks | 7 |
| BNQ21, BQQ41 quick-connect panel mount blocks | 8 |
| **Power feed through terminal blocks** | |
| C7021 1- to 6-pole block | 9 |
| **Double row terminal blocks** | |
| TB100 2- to 36-pole blocks | 10-11 |
| TB200 and TB200HB 2- to 30-pole blocks | 12-13 |
| TB300 and TB345 2- to 24-pole blocks | 14-15 |
| **Accessories for double row terninal blocks** | |
| Marking options and covers | 16 |
| Top and bottom marking strips for terminal blocks | 17 |
| **Double row terminal blocks continued** | |
| TB400 2- to 12-pole blocks | 18 |
| KU 2- to 12-pole blocks | 19 |
| **Mounting accessories** | |
| End brackets | 20 |
| DIN-Rail and C-Rail mounting rails and brackets | |

## NDN DIN-Rail feed through blocks

The NDN feed through blocks feature a compact line of terminal blocks suitable for both 35mm DIN-Rail or C-Rail applications. Products easily snap onto the mounting rail for a quick, simple, low-cost solution. Available accessories include jumpers and marking tape.

UL E62622

CSA File 15364

CSA File 47235 (NDN1, NDN111)

**NDNV4**

| Approval | |
|---|---|
| **Technical data** | |
| Rated voltage | 600V |
| Rated Current | 30A |
| Center spacing, in (mm) | 0.25 / 6.35 |
| Conductor cross-section, flexible (AWG/mm²) | 22~10 / 0.3~5.3 |
| Number of Poles | 4 |
| Circuits per foot | 48 |
| Torque(N•m) | 2 |
| Torque(lb-in) | 18 |
| Screw | #6-32 |
| WxHxD(mm) | 25.4 x 34 x 42.4 |
| **Colors** | **Cat. no.** |
| ○ White (standard) | NDNV4-WH |
| ● Black | NDNV4-BK |
| **Accessories** | **Cat. no.** |
| 4 circuits | JN4 |
| | MTC6 |
| 35mm DIN-Rail | DRL35MML<br>DRL35MMHI |
| C-Rail | NFTA<br>NRA |
| — | — |

**Dimensions — in (mm)**

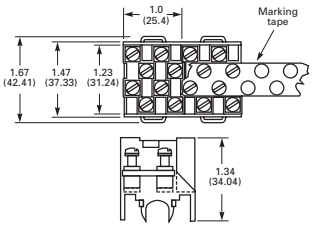


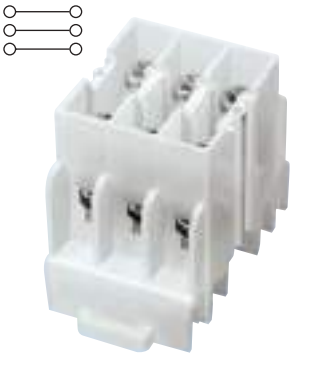

**NDN3**

| Approval | |
|---|---|
| **Technical data** | |
| Rated voltage | 600V |
| Rated Current | 30A |
| Center spacing, in (mm) | 0.3 / 7.62 |
| Conductor cross-section, flexible (AWG/mm²) | 22~10 / 0.3~5.3 |
| Number of Poles | 3 |
| Circuits per foot | 38 |
| Torque(N•m) | 2 |
| Torque(lb-in) | 18 |
| Screw | #6-32 |
| WxHxD(mm) | 23.9 x 33.3 x 42.4 |
| **Colors** | **Cat. no.** |
| ○ White (standard) | NDN3-WH |
| ● Blue | NDN3-BL |
| **Accessories** | **Cat. no.** |
| 2 circuits | JNDN3 |
| | MT12-1-2 |
| 35mm DIN-Rail | DRL35MML<br>DRL35MMHI |
| C-Rail | NFTA<br>NRA |
| — | — |

**Dimensions — in (mm)**

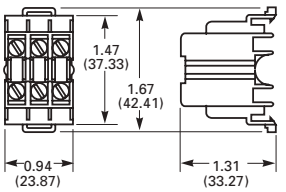

**NDN63**

| Approval | |
|---|---|
| **Technical data** | |
| Rated voltage | 600V |
| Rated Current | 65A |
| Center spacing, in (mm) | 0.375 / 9.52 |
| Conductor cross-section, flexible (AWG/mm²) | 18~6 / 0.8~13.3 |
| Number of Poles | 3 |
| Circuits per foot | 30 |
| Torque(N•m) | 4 |
| Torque(lb-in) | 35 |
| Screw | #10-32 |
| WxHxD(mm) | 29.7 x 36.8 x 42.4 |
| **Colors** | **Cat. no.** |
| ○ White (standard) | NDN63-WH |
| ● Black | NDN63-BK |
| **Accessories** | **Cat. no.** |
| 2 circuits | JN1 |
| | MT12-1-2 |
| 35mm DIN-Rail | DRL35MML<br>DRL35MMHI |
| C-Rail | NFTA<br>NRA |
| — | — |

**Dimensions — in (mm)**

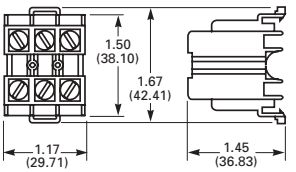


Block

Jumper

Marking tape

Mounting

Modular option

## NDN1

| Approval | |
|---|---|
| **Technical data** | |
| Rated voltage | 600V |
| Rated Current | 90A |
| Center spacing in (mm) | 0.635 / 16.31 |
| Conductor cross-section, flexible (AWG/mm²) | 18~2 / 0.8~33.6 |
| Number of Poles | 1 |
| Circuits per foot | 18 |
| Torque(N•m) | 3.6 |
| Torque(lb-in) | 32 |
| Screw | 1/4-28 |
| WxHxD(mm) | 15 x 30.3 x 43.5 |
| **Colors** | **Cat. no.** |
| ○ White (standard) | NDN1-WH |
| **Accessories** | **Cat. no.** |
| — | — |
| | MT12-1-2 |
| 35mm DIN-Rail | DRL35MML<br>DRL35MMHI |
| C-Rail | NFTA<br>NRA |

**Dimensions — in (mm)**

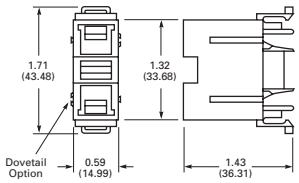


## NDN111

| Approval | |
|---|---|
| **Technical data** | |
| Rated voltage | 600V |
| Rated Current | 90A |
| Center spacing in (mm) | 0.635 / 16.31 |
| Conductor cross-section, flexible (AWG/mm²) | 18~2 / 0.8~33.6 |
| Number of Poles | 3 |
| Circuits per foot | 18 |
| Torque(N•m) | 3.6 |
| Torque(lb-in) | 32 |
| Screw | 1/4-28 |
| WxHxD(mm) | 47.5 x 36.6 x 43.5 |
| **Colors** | **Cat. no.** |
| ○ White (standard) | NDN111-WH |
| ● Black | NDN111-BK |
| **Accessories** | **Cat. no.** |
| 2 circuits | JN1 |
| | MT12-1-2 |
| 35mm DIN-Rail | DRL35MML<br>DRL35MMHI |
| C-Rail | NFTA<br>NRA |
| NDN111A-WH, NDN111A-BK | |

**Dimensions — in (mm)**

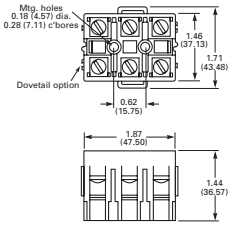

## C-Rail feed through terminal blocks

C-Rail terminal blocks provide a low-profile, compact foot-print solution for various wire connection applications. Products feature an easy, snap-on installation method and an array of accessories including jumpers and marking strips.

UL E62622 (excluding N512)

CSA File 15364

CSA File 47235 (NFT3)

12-pole

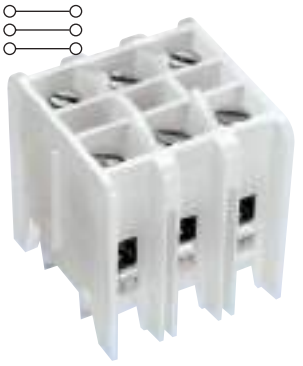

| | N512 | NFT2 | NFT3 |
|---|---|---|---|
| **Approval** | | | |
| **Technical data** | | | |
| Rated voltage | 300V 600V | 600V | 600V |
| Rated current | 20A 5A | 40A | 40A |
| Center spacing in (mm) | 0.197 / 5.0 | 0.28 / 7.13 | 0.39 / 9.91 |
| Conductor cross-section, flexible (AWG/mm²) | 22~12 / 0.3~3.3 | 22~8 / 0.3~8.4 | 22~8 / 0.3~8.4 |
| Number of Poles | 12 | 2 | 3 |
| Circuits per foot | 60 | 38 | 28 |
| Torque(N•m) | 1.4 | 2 | 2 |
| Torque(lb-in) | 12 | 18 | 18 |
| Screw | #4-48 | #8-32 | #8-32 |
| WxHxD(mm) | 61.0 x 27.7 x 22.4 | 16.5 x 34.7 x 42.8 | 30.0 x 32.9 x 31.4 |
| **Colors** | **Cat. no.** | **Colors** / **Cat. no.** | **Colors** / **Cat. no.** |
| Block | ● Black (standard) N512-BK | ○ White (standard) NFT2-WH | ○ White (standard) NFT3-WH |
| | — — | — — | ● Black NFT3-BK |
| **Accessories** | **Cat. no.** | **Accessories** / **Cat. no.** | **Accessories** / **Cat. no.** |
| Jumper | 12 circuits JN512 | 2 circuits JN2 | 2 circuits JN3 |
| Marking tape | AT512 | MT12-1-2 | MT12-1-2 |
| Mounting | C-Rail NFTA NRA | C-Rail NFTA NRA | C-Rail NFTA NRA |
| Dimensions — in (mm) | | | |

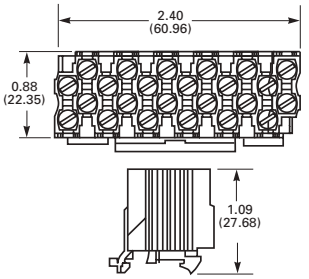


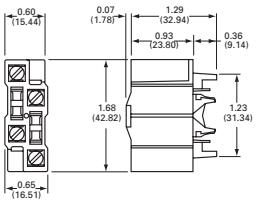


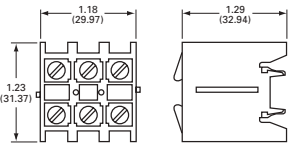

**NC3**

| Approval | |
|---|---|
| **Technical data** | |
| Rated voltage | 600V |
| Rated Current | 175A |
| Center spacing in (mm) | 1.06 / 26.92 |
| Conductor cross-section, flexible (AWG/mm²) | 14~2/0 /2.1~67.4 Cu/AL |
| Number of Poles | 3 |
| Circuits per foot | 11 |
| Torque(N•m) | 5.1 |
| Torque(lb-in) | 45 |
| Screw | 5/16 - 24 |
| WxHxD(mm) | 79.4 x 44.5 x 44.5 |
| **Colors** | **Cat. no.** |
| ○ White (standard) | NC3-WH |
| — | — |
| **Accessories** | **Cat. no.** |
| — | — |
| | MT12-1-2 |
| Panel mount<br>C-Rail | —<br>NFTA<br>NRA |
| **Dimensions — in (mm)** | |

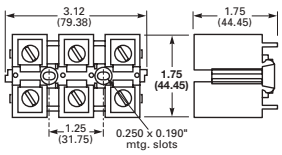


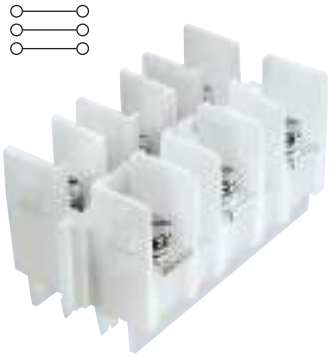

**NSE3**

| Approval | |
|---|---|
| **Technical data** | |
| Rated voltage | 600V |
| Rated Current | 115A |
| Center spacing in (mm) | 1.06 / 26.92 |
| Conductor cross-section, flexible (AWG/mm²) | Ring terminals only |
| Number of Poles | 3 |
| Circuits per foot | 11 |
| Torque(N•m) | 3.6 |
| Torque(lb-in) | 32 |
| Screw | 1/4 - 28 |
| WxHxD(mm) | 79.2 x 38.9 x 445 |
| **Colors** | **Cat. no.** |
| ○ White (standard) | NSE3-WH |
| — | — |
| **Accessories** | **Cat. no.** |
| 2 circuits | JNSE3 |
| | MT12-1-2 |
| Panel mount<br>C-Rail | —<br>NFTA Series<br>NRA Series |
| **Dimensions — in (mm)** | |

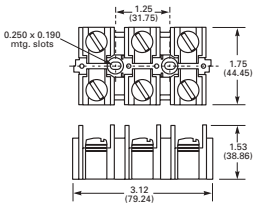

**NSS3**

| Approval | |
|---|---|
| **Technical data** | |
| Rated voltage | 600V |
| Rated Current | 30A |
| Center spacing in (mm) | 0.385 / 9.77 |
| Conductor cross-section, flexible (AWG/mm²) | Ring terminals only |
| Number of Poles | 3 |
| Circuits per foot | 28 |
| Torque(N•m) | 1.4 |
| Torque(lb-in) | 12 |
| Screw | #6-32 |
| WxHxD(mm) | 31.5 x 33.7 x 31.8 |
| **Colors** | **Cat. no.** |
| ○ White (standard) | NSS3-WH |
| — | — |
| **Accessories** | **Cat. no.** |
| 2 circuits | JNSS3 |
| | MT12-1-2 |
| Panel mount<br>C-Rail | —<br>NFTA<br>NRA |
| **Dimensions — in (mm)** | |

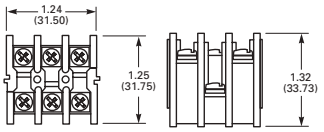

## DIN-Rail depluggable blocks

Depluggable terminal blocks are available for both 35mm DIN-Rail and C-Rail applications. These blocks provide a simple depluggable* option for panel wiring applications with the convenience of quick, easy, snap-on installation. Product accessories such as jumpers and marking tape are available for most products.

UL E62622

CSA File 15364

CSA File 47235 (15188 Series)

* Not for use as a load break disconnect.

**15188**

**PLU3**

**PLU1**

| Approval | | | |
|---|---|---|---|
| **Technical data** | | | |
| Rated voltage | 600V | 600V | 600V |
| Rated Current | 30A | 40A | 70A |
| Center spacing in (mm) | 0.375 / 9.52 | 0.39 / 9.91 | 0.3 / 7.62 |
| Conductor cross-section, flexible (AWG/mm²) | 16~12 / 1.3~3.3 | 22~8 / 0.3~8.4 | 18~4 / 0.8~21.2 |
| Number of Poles | 3 or 4 | 3 | 1 - 3 |
| Circuits per foot | 32 | 28 | 19 |
| Torque(N•m) | 1.4 | 2 | 3.6 |
| Torque(lb-in) | 12 | 18 | 32 |
| Screw | #6-32 | #8-32 | 1/4 - 28 |
| | WxHxD(mm)<br>3-Pole 30.2 x 49.3 x 47.8<br>4-Pole 39.2 x 49.3 x 47.8 | WxHxD(mm)<br>3-Pole 31.8 x 47.0 x 45.6 | WxHxD(mm)<br>1-Pole 18.5 x 47.0 x 45.6<br>2-Pole 34.0 x 47.0 x 45.6<br>3-Pole 49.5 x 47.0 x 45.6 |
| **Colors** | **Cat. no.** | **Colors** | **Cat. no.** | **Colors** | **Cat. no.** |
| Block ○ White (standard) | 15188-3 | ○ White (standard) | PLU3-WH | ○ White (1-Pole) | PLU1-WH |
| ○ White (standard) | 15188-4 | ● Black | PLU3-BK | ○ White (2-Pole) | PLU11-WH |
| | | | | ○ White (3-Pole) | PLU111-WH |
| **Accessories** | **Cat. no.** | **Accessories** | **Cat. no.** | **Accessories** | **Cat. no.** |
| Jumper 2 circuits | 15188J-2-J, J15188 | 2 circuits | JN3 | 2 circuits | JN1 |
| Marking tape — | — | | MT12-1-2 | | MT12-1-2 |
| Mounting 35mm DIN-Rail | DRL35MMLO<br>DRL35MMHI | C-Rail (AL) | NFTA<br>NRA | C-Rail (AL) | NFTA<br>NRA |
| Configurable Option Reverse Wiring | 15188-_R | — | — | — | — |
| Locking | 15188-_S | | | | |
| Reverse; Locking | 15188-_RS | | | | |
| Options offered for both pole lengths | | | | | |

**Dimensions — in (mm)**

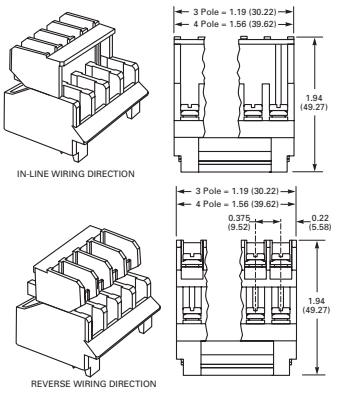


**Dimensions — in (mm)**

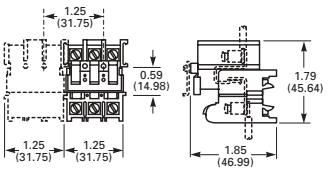


**Dimensions — in (mm)**

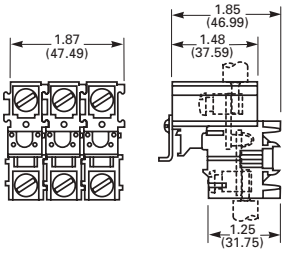

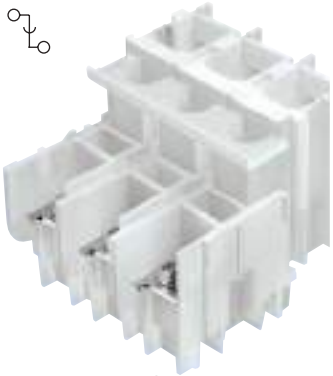

PSU1

## Panel mount multi-pole blocks

Multi-pole panel mount terminal blocks provide a compact, high density circuit connection solution without the necessity of a mounting rail. These products are designed to be nested together to form one string of circuit connections.

UL E62622

CSA 15364

KT3

KT4

| Approval | |
|---|---|
| **Technical data** | |
| Rated voltage | 600V |
| Rated Current | 45A |
| Center spacing in (mm) | 0.625 / 15.88 |
| Conductor cross-section, flexible (AWG/mm²) | Ring terminals only |
| Number of Poles | 1 - 3 |
| Circuits per foot | 19 |
| Torque(N•m) | 2.7 |
| Torque(lb-in) | 24 |
| Screw | #10-32 |
| 3-Pole | WxHxD(mm) 50.3 x 49.1 x 62.1 |
| **Colors** | **Cat. no.** |
| ○ White (3-Pole) | PSU111-WH |
| **Accessories** | **Cat. no.** |
| — | — |
| | MT12-1-2 |
| C-Rail (AL) | NFTA NRA |
| — | — |
| **Dimensions — in (mm)** | |

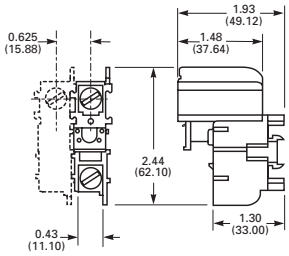


| Approval | |
|---|---|
| **Technical data** | |
| Rated voltage | 600V |
| Rated Current | 40A |
| Center spacing in (mm) | 0.39 / 9.91 |
| Conductor cross-section, flexible (AWG/mm²) | 22~8 / 0.3~8.4 |
| Number of Poles | 3 |
| Circuits per foot | 28 |
| Torque(N•m) | 2 |
| Torque(lb-in) | 18 |
| Screw | #8-32 |
| WxHxD(mm) | 59.5 x 31.8 x 31.0 |
| **Colors** | **Cat. no.** |
| ○ White (standard) | KT3-WH |
| **Accessories** | **Cat. no.** |
| 2 circuits | JN3 |
| | MT12-1-2 |
| Panel mount • Mounting foot | — KAD |
| **Dimensions — in (mm)** | |

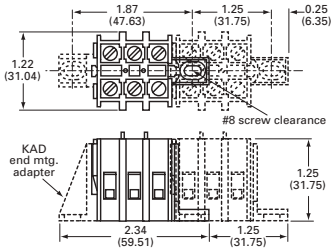


| Approval | |
|---|---|
| **Technical data** | |
| Rated voltage | 600V |
| Rated Current | 30A |
| Center spacing in (mm) | 0.25 / 6.35 |
| Conductor cross-section, flexible (AWG/mm²) | 22~10 / 0.3~5.3 |
| Number of Poles | 4 |
| Circuits per foot | 48 |
| Torque(N•m) | 2 |
| Torque(lb-in) | 18 |
| Screw | #6-32 |
| WxHxD(mm) | 43.8 x 34.0 x 32.2 |
| **Colors** | **Cat. no.** |
| ○ White | KT4-WH-A* |
| ○ White | KT4-WH-B* |
| **Accessories** | **Cat. no.** |
| 4 circuits | JN4 |
| | MTC6 |
| Panel mount | — |
| **Dimensions — in (mm)** | |

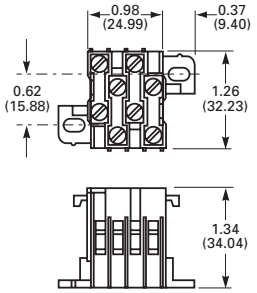


* The KT4 products are designed to be nested together to form one string of circuit connectors. When used in series, order catalog numbers KT4-WH-A and KT4-WH-B.

Block

Jumper

Marking tape

Mounting

## Panel mount quick-connect blocks

A time saving alternative for electrical connections, the Bussmann series quick-connect terminal blocks offer a convenient solution. With male spade terminals, wire connections are made quickly and simply with these terminal blocks.

UL E62622

CSA 15364

**BNQ21**

**BQQ41**

| | **BNQ21** | **BQQ41** |
|---|---|---|
| **Approval** | | |
| **Technical data** | | |
| Rated voltage | 600V | 600V |
| Rated Current | 40A | 30A |
| Center spacing in (mm) | 0.437 / 11.1 | 0.437 / 11.1 |
| Conductor cross-section, flexible (AWG/mm²) | 22~8 / 0.3~8.4 | 0.25" Quick-connect terminals only |
| Number of Poles | 1 | 1 |
| Circuits per foot | 24 | 24 |
| Torque(N•m) | 2 | NA |
| Torque(lb-in) | 18 | NA |
| Screw | #8-32 | NA |
| WxHxD(mm) | 33.3 x 35.8 x 37.3 | 33.3 x 35.8 x 37.3 |
| **Colors** | **Cat. no.** | **Colors** / **Cat. no.** |
| Block ○ White (standard) | BNQ21-WH | ○ White (standard) BQQ41-WH |
| **Accessories** | **Cat. no.** | **Accessories** / **Cat. no.** |
| — | — | — — |
| Mounting: Panel mount | — | Panel mount — |
| Mounting: • Mounting foot | BQE | • Mounting foot BQE |
| **Dimensions — in (mm)** | | **Dimensions — in (mm)** |

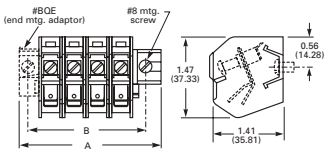


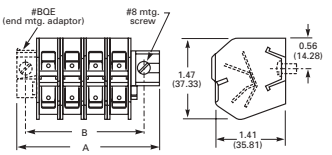

## C7021 power feed through terminal blocks

Power feed through terminal block with two rows 1/4-20 studs capable of accommodating the industry standard two-hole compression lugs on both studs in parallel.

### Ratings

- Volts 300 V
- Amps 115/175 A* per pole

* 175 achieved using both studs in parallel, 115 A using a single stud per line.

### Agency information

- cURus, Guides XCFR2, XCFR8, File E62622
- CE

### Specifications

- Poles: 1- to 6
- Wire range: AWG #3/0-8
- Center spacing: 0.69" (18mm)
- Bolt hole spacing: 0.625" or 5/8" (16mm)
- Stud: Standard 1/4-20 stud (tin-plated brass) or optional M6 stud.
- Mounting: #6 thread cutting screws (not included) or optional mounting ends.
- Torque: 36 lb-in.
- Operating temperature: 130°C (266°F) max.

### Typical applications

- Applications requiring up to 175 A utilizing a 2-hole compression lug on 5/8" centers
- Input/output block for telecommunications power panels
- To eliminate busbars

### Dimensions — mm (in)

With mounting ends

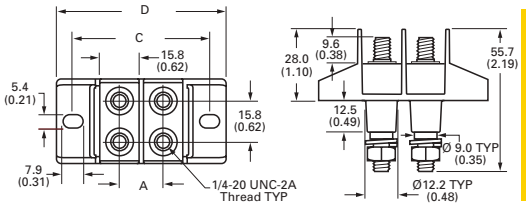


Without mounting ends

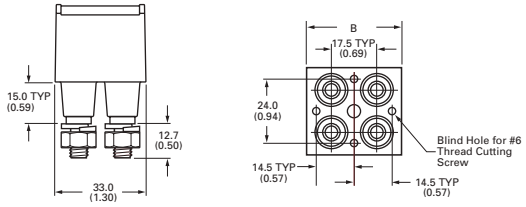


Panel cutouts

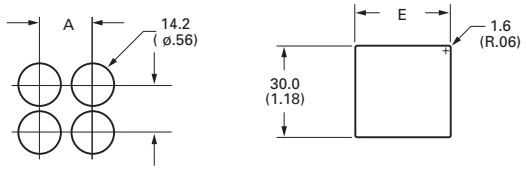


| Catalog no. | A | B | C | D | E |
|---|---|---|---|---|---|
| **C7021-01-X with mounting ends** | | | | | |
| C7021-02-X | 17.5 (0.69) | — | 54.4 (2.14) | 67.3 (2.65) | 31.8 (1.25) |
| C7021-03-X | 34.9 (1.37) | — | 70.9 (2.83) | 84.8 (3.34) | 49.2 (1.94) |
| C7021-04-X | 52.3 (2.06) | — | 89.3 (3.52) | 102.2 (4.02) | 66.7 (2.63) |
| C7021-05-X | 69.8 (2.75) | — | 106.8 (4.20) | 119.7 (4.71) | 84.2 (3.31) |
| C7021-06-X | 87.2 (3.44) | — | 124.2 (4.89) | 134.1 (5.40) | 101.7 (4.00) |
| **C7021-01N-X without mounting ends** | | | | | |
| C7021-02N-X | 17.5 (0.69) | 36.1 (1.42) | — | — | 31.8 (1.25) |
| C7021-03N-X | 34.9 (0.69) | 53.5 (2.11) | — | — | 49.2 (1.94) |
| C7021-04N-X | 52.3 (2.06) | 71.0 (2.80) | — | — | 66.7 (2.63) |
| C7021-05N-X | 69.8 (2.75) | 88.4 (3.48) | — | — | 84.2 (3.31) |
| C7021-06N-X | 87.2 (3.44) | 105.9 (4.17) | — | — | 101.7 (4.00) |

### Catalog number build-a-code

| Symbol | Poles | Mount ends | Studs | | Hardware |
|---|---|---|---|---|---|
| **C7021** | | | | — | |
| | **01** = 1-pole (2 studs) | **Blank** = Mount ends | **Blank** = Standard | | **Blank** = No hardware |
| | **02** = 2-pole (4 studs) | **N** = No mount ends | **M6** = M6 studs | | **0** = Bulk pack, one set |
| | **03** = 3-pole (6 studs) | | | | **1** = Bulk pack, two sets |
| | **04** = 4-pole (8 studs) | | | | **2** = Assembled, bottom |
| | **05** = 5-pole (10 studs) | | | | **3** = Assembled, top |
| | **06** = 6-pole (12 studs) | | | | **4** = Assembled, both sets |

## TB100 double row terminal blocks

### Ratings*

- 300 V
- 30 A
- Breakdown voltage: 3600 V

* Maximum rating shown; some options may be rated lower.

TB100-08

TB100-04SP

### Agency information

- UL File E62622/CSA File 47235; IEC Compliance

### Specifications

- Poles: 2 to 36
- Center spacing: 0.375" or 3/8" (10mm)
- Wire range: 14-22 AWG Cu
- Screw size: #6-32 phil-slot screws
- Torque rating: 9 lb-in
- Distance between barriers: 0.30" (8mm)
- Mounting: #6 screws
- Operating temperature: -40°C to 130°C (-40°F to 266°F)

### Materials

- Molded black thermoplastic base, UL rated 94V0
- Tin-plated brass terminals
- Zinc-plated steel screws

### Dimensions — in

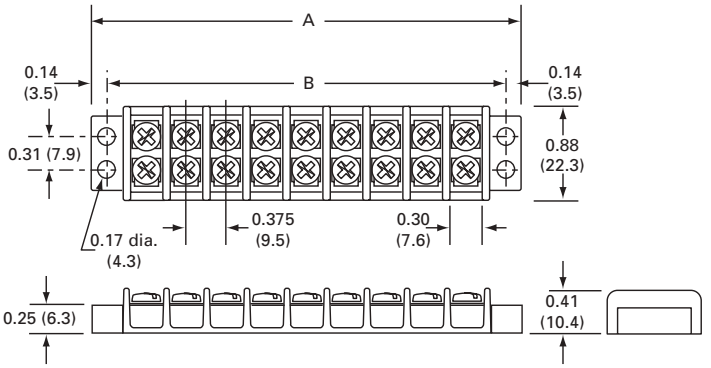


| Poles | A | B | Poles | A | B | Poles | A | B |
|---|---|---|---|---|---|---|---|---|
| 02 | 1.40 | 1.12 | 14 | 5.90 | 5.62 | 26 | 10.40 | 10.12 |
| 03 | 1.78 | 1.50 | 15 | 6.28 | 6.00 | 27 | 10.78 | 10.50 |
| 04 | 2.16 | 1.88 | 16 | 6.66 | 6.38 | 28 | 11.16 | 10.88 |
| 05 | 2.53 | 2.25 | 17 | 7.03 | 6.75 | 29 | 11.53 | 11.25 |
| 06 | 2.90 | 2.62 | 18 | 7.40 | 7.12 | 30 | 11.90 | 11.62 |
| 07 | 3.28 | 3.00 | 19 | 7.78 | 7.50 | 31 | 12.28 | 12.00 |
| 08 | 3.66 | 3.38 | 20 | 8.16 | 7.88 | 32 | 12.66 | 12.38 |
| 09 | 4.03 | 3.75 | 21 | 8.53 | 8.25 | 33 | 13.03 | 12.75 |
| 10 | 4.40 | 4.12 | 22 | 8.90 | 8.62 | 34 | 13.40 | 13.12 |
| 11 | 4.78 | 4.50 | 23 | 9.28 | 9.00 | 35 | 13.78 | 13.50 |
| 12 | 5.16 | 4.88 | 24 | 9.66 | 9.38 | 36 | 14.16 | 13.88 |
| 13 | 5.53 | 5.25 | 25 | 10.03 | 9.75 | | | |

1" = 25.4mm.

### Catalog number build-a-code

| Symbol | | Poles | Screw options | Marking/cover | Hardware options |
|---|---|---|---|---|---|
| **TB100** | — | | | | |
| | | **02** to **36** | **Blank** = steel phil-slot, zinc-plated | **L1** to **L6** | **QC1** to **QC20** = Quick-connects |
| | | | **00** = screws shipped bulk | Marking options, see page 10-16 | Custom options† |
| | | | **B** = brass phil-slot, nickel-plated | Special markings†, see page 10-16 | **J101** = flat slip-on jumper (2 position only) |
| | | | **SP** = steel SEMS phil-slot, zinc-plated | | **0J2** = over barrier jumpers |
| | | | | | **0J4** = over barrier jumpers |

† Contact factory for configuration.

### Accessories

- Marker strips, see page 10-17
- Covers, see page 10-16

### Screw options

**B**

Brass phil-slot, nickel-plated
**F502-J** (bulk)

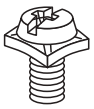

**SP**

Steel SEMS phil-slot, zinc-plated
**B001-7021-J** (bulk)

### Hardware options

Quick-connects — assembled: 0.187" x 0.020" terminals, 13 amps maximum. For other orientations, contact factory.

**QC1**

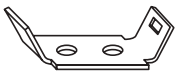

**QC2**

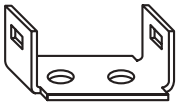

**QC3**

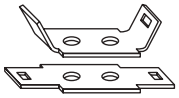

**QC4**

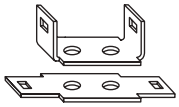

**QC5**

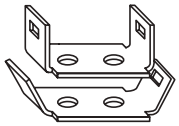

**QC6**

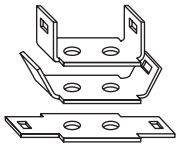

**QC7**

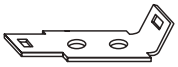

**QC8**

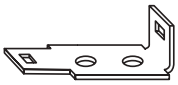

**QC9**

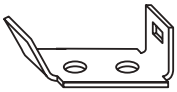

**QC10**

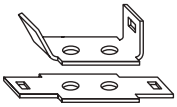

**QC11**

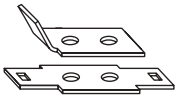

**QC12**

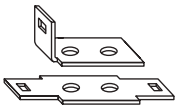

**QC13**

**QC14**

**QC15**

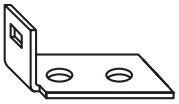

**QC16**

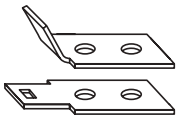

**QC17**

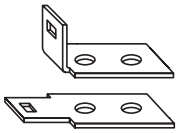

**QC18**

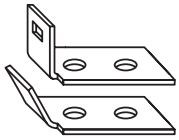

**QC19**

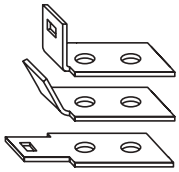

**QC20**

Quick-connects — bulk: minimum order 100 pieces per catalog number.

**QC101-J**
Flat — none

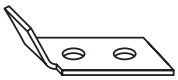

**QC102-J**
QC 45° — none

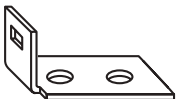

**QC103-J**
QC 90° — none

**QC104-J**
Flat — Flat

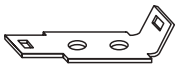

**QC105-J**
Flat — QC 45°

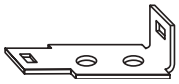

**QC106-J**
Flat — QC 90°

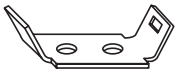

**QC107-J**
QC 45° — QC 45°

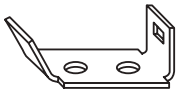

**QC108-J**
QC 45° — QC 90°

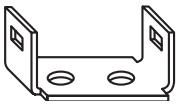

**QC109-J**
QC 90° — QC90°

Jumpers — bulk: minimum order 100 pieces per catalog number. Contact factory for jumper assembly.

**J101**

Flat slip-on (bulk: **J101-J**)

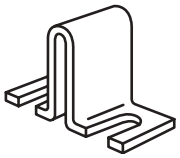

**OJ2**

Slip-on over barrier (bulk: **OJ2-J**)

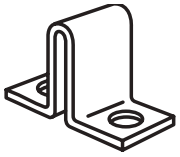

**OJ4**

Closed over barrier (bulk: **OJ4-J**)

## TB200 and TB200HB double row terminal blocks

### Ratings*

- Volts
  - 300 V (TB200)
  - 600 V (TB200HB)
- Amps 30 A
- Breakdown voltage 4800 V

* Maximum rating shown; some options may be rated lower.

### Agency information

- UL File E62622, CSA File 47235 and 15364; IEC Compliance

### Specifications

- Poles: 2 to 30
- Wire range: 12 - 22 AWG Cu
- Center spacing: 0.437" or 7/16" (11mm)
- Distance between barriers: 0.353" (9mm)
- Screw size: #6-32 phil-slot screws
- Torque rating: 9 lb-in
- Mounting: #6 screws
- Operating temperature: -40°C to 130°C (-40°F to 266°F)

### Materials

- Molded black thermoplastic base UL rated 94V0
- Terminal plating: Tin-plated brass terminals
- Zinc-plated steel screws

### Dimensions — in

TB200

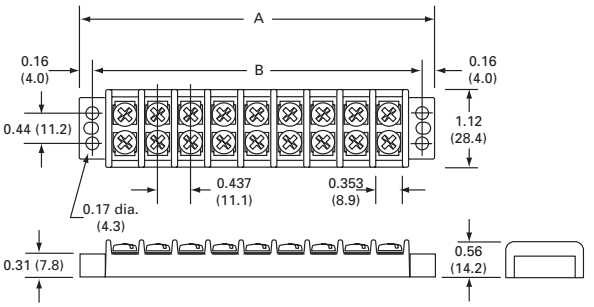


TB200HB

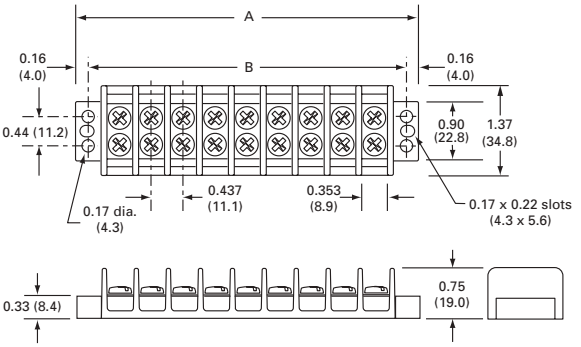


| Poles | A | B | Poles | A | B | Poles | A | B |
|---|---|---|---|---|---|---|---|---|
| 02 | 1.63 | 1.31 | 12 | 6.00 | 5.68 | 22 | 10.37 | 10.06 |
| 03 | 2.07 | 1.75 | 13 | 6.44 | 6.12 | 23 | 10.81 | 10.50 |
| 04 | 2.51 | 2.18 | 14 | 6.87 | 6.56 | 24 | 11.25 | 10.93 |
| 05 | 2.94 | 2.62 | 15 | 7.31 | 7.00 | 25 | 11.68 | 11.37 |
| 06 | 3.38 | 3.06 | 16 | 7.75 | 7.43 | 26 | 12.12 | 11.81 |
| 07 | 3.82 | 3.50 | 17 | 8.19 | 7.87 | 27 | 12.56 | 12.25 |
| 08 | 4.25 | 3.93 | 18 | 8.62 | 8.31 | 28 | 13.00 | 12.68 |
| 09 | 4.69 | 4.37 | 19 | 9.06 | 8.75 | 29 | 13.44 | 13.12 |
| 10 | 5.13 | 4.81 | 20 | 9.50 | 9.18 | 30 | 13.87 | 13.56 |
| 11 | 5.57 | 5.25 | 21 | 9.94 | 9.62 | | | |

1" = 25.4mm.

### Catalog number build-a-code

| Symbol | Barrier style | | Poles | Screw options | Marking/cover | Hardware options |
|---|---|---|---|---|---|---|
| **TB** | | — | | | | |
| | **200** = Standard | | **02** to **30** | **Blank** = Steel phil-slot, zinc-plated | **L1** to **L6** = Marking options, see page 10-16 | **QC1** to **QC20** = Quick-connects |
| | **200HB** = High barrier | | | **00** = Screws shipped bulk | Special markings†, see page 10-16 | **Custom options†** |
| | | | | **B** = Brass phil-slot, nickel-plated | | **J201** = Flat slip-on jumper, 2 position only |
| | | | | **BS** = Brass SEMS phil-slot, nickel-plated | | **0J3** = Over barrier jumpers |
| | | | | **P** = Steel SEMS (P-style) | | **0J5** = Over barrier jumpers |
| | | | | **SP** = Steel SEMS phil-slot, zinc-plated | | **0J7** = Over barrier jumpers |
| | | | | **SS** = Stainless steel SEMS, phil-slot | | |
| | | | | **ST** = Stainless steel, phil-slot | | |

† Contact factory for configuration.

### Accessories

- Marker strips, see page 10-17
- Covers, see page 10-16

## Screw options

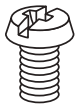

**B**

Brass phil-slot
nickel-plated
**B001-7016-J** (bulk)

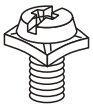

**BS**

Brass SEMS phil-slot
nickel-plated
**B001-7019-J** (bulk)

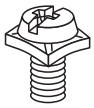

**SP**

Steel SEMS phil-slot
zinc-plated
**B001-7007-J** (bulk)

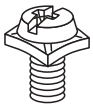

**P**

Steel SEMS
(P-style)
**B001-7000-J** (bulk)

**ST**

Stainless steel phil-slot
**F507-J** (bulk)

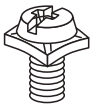

**SS**

Stainless steel SEMS
phil-slot
**B001-7085-J** (bulk)

## Hardware options

Quick-connects — assembled: 0.25" x 0.031" terminals, 20 amps maximum. For other orientations, contact factory.

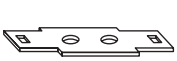

**QC1**

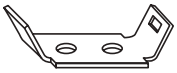

**QC2**

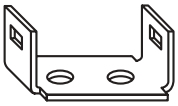

**QC3**

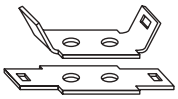

**QC4**

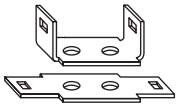

**QC5**

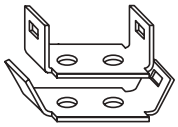

**QC6**

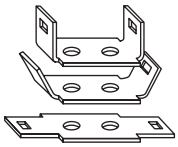

**QC7**

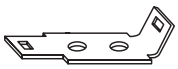

**QC8**

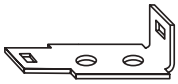

**QC9**

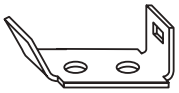

**QC11**

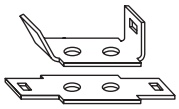

**QC10**

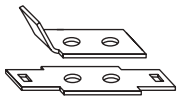

**QC12**

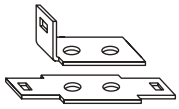

**QC13**

**QC14**

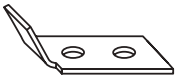

**QC15**

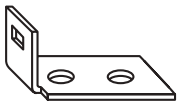

**QC16**

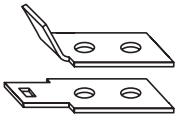

**QC17**

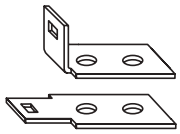

**QC18**

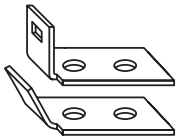

**QC19**

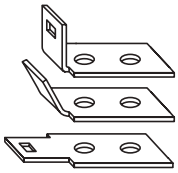

**QC20**

Quick-connects — bulk: minimum order 100 pieces per catalog number.

**QC201-J**

QC 45° — blank

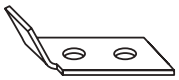

**QC202-J**

Flat — blank

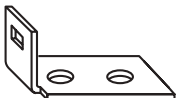

**QC203-J**

QC 90° — blank

**QC204-J**

Flat — Flat

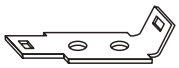

**QC205-J**

Flat — QC 45°

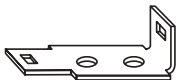

**QC206-J**

Flat — QC 90°

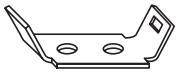

**QC207-J**

QC 45° — QC 45°

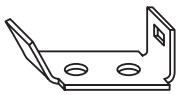

**QC208-J**

QC 45° — QC 90°

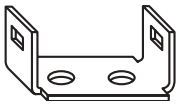

**QC209-J**

QC 90° — QC 90°

Jumpers — bulk: minimum. order 100 pieces per catalog number. Contact factory for jumper assembly.

**J201**

Flat slip-on
(not available on TB200HB)
**J201-J** (bulk)

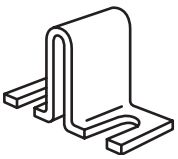

**OJ3**

Slip-on over barrier for TB200HB
**OJ3-J** (bulk)

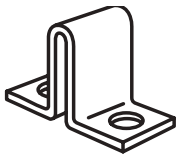

**OJ5**

Closed over barrier for TB200HB
**OJ5-J** (bulk)

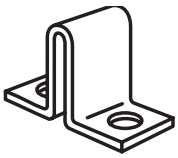

**OJ7**

Closed over barrier for TB200
**OJ7-J** (bulk)

## TB300 and TB345 double row terminal blocks

### Ratings*

- Volts 600 V
- Amps
  - 30 A (TB300)
  - 45 A (TB345)
- Breakdown voltage 7500 V

* Maximum rating shown; some options may be rated lower.

### Agency information

UL File E62622, CSA File 47235; IEC Compliance

### Specifications

- Poles: 2 to 24
- Wire range: 8 - 22 AWG Cu
- Center spacing: 0.562" or 9/16" (14mm)
- Screw size
  - TB300 — #8-32 phil-slot screws
  - TB345 — #10-32 phil-slot screws
- Torque rating
  - #8 screws - 16 lb-in
  - #10 screws - 20 lb-in
- Distance between barriers: 0.41" (10mm)
- Mounting
  - TB300 — #8 screws
  - TB345 — #10 screws
- Operating temperature: -40°C to 130°C (-40°F to 266°F)

### Materials

- Molded black thermoplastic base, UL rated 94V0
- Tin-plated brass terminals
- Zinc-plated steel screws

### Dimensions — in

TB300 and TB345

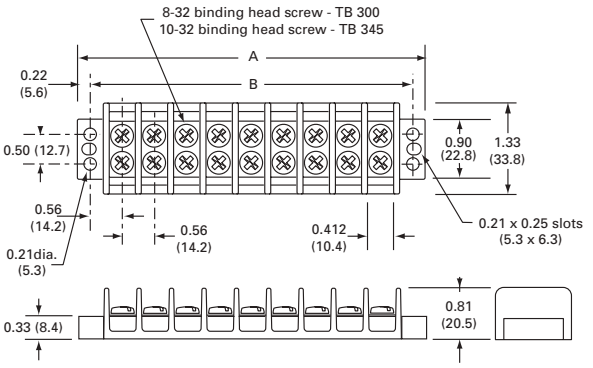


| Poles | A | B | Poles | A | B | Poles | A | B |
|---|---|---|---|---|---|---|---|---|
| 02 | 2.13 | 1.69 | 10 | 6.62 | 6.19 | 18 | 11.12 | 10.68 |
| 03 | 2.69 | 2.25 | 11 | 7.18 | 6.75 | 19 | 11.68 | 11.25 |
| 04 | 3.25 | 2.81 | 12 | 7.75 | 7.31 | 20 | 12.24 | 11.81 |
| 05 | 3.81 | 3.37 | 13 | 8.31 | 7.87 | 21 | 12.80 | 12.37 |
| 06 | 4.37 | 3.94 | 14 | 8.87 | 8.44 | 22 | 13.37 | 12.93 |
| 07 | 4.94 | 4.50 | 15 | 9.43 | 9.00 | 23 | 13.93 | 13.50 |
| 08 | 5.50 | 5.06 | 16 | 9.99 | 9.56 | 24 | 14.49 | 14.06 |
| 09 | 6.06 | 5.62 | 17 | 10.56 | 10.12 | | | |

1" = 25.4mm.

### Catalog number build-a-code

| Symbol | Screw size | | Poles | Screw options | Marking/cover | Hardware options |
|---|---|---|---|---|---|---|
| TB | | — | | | | |
| | **300** = 8-32 screw | | **02** to **24** | **Blank** = Steel phil-slot, zinc-plated | **L1** to **L6** marking options, see page 10-16 | **QC1** to **QC20** = Quick-connects (TB300 only) |
| | **345** = 10-32 screw | | | **00** = Screws shipped bulk | Special markings†, see page 10-16 | **Custom options (TB300 only)†** |
| | | | | **B** = Brass phil-slot, nickel-plated | | **J301** = Flat slip-on jumper |
| | | | | **BS** = Brass SEMS phil-slot, nickel-plated (TB300 only) | | **OJ6** = Over barrier jumper |
| | | | | **SP** = Steel SEMS phil-slot, zinc-plated | | **OJ11** = Over barrier jumper |
| | | | | **ST** = Stainless steel, phil-slot | | |

† Contact factory for configuration.

### Accessories

- Marker strips, see page 10-17
- Covers, see page 10-16

## Screw options

**B**

Brass phil-slot nickel-plated
- **B001-7018-J** (TB300 bulk)
- **B500-023-028-J** (TB345 bulk)

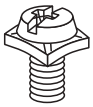

**BS**

Brass SEMS phil-slot nickel-plated
- **B001-7015-J** (TB300 bulk)

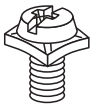

**SP**

Steel SEMS phil-slot zinc-plated
- **B001-7017-J** (TB300 bulk)
- **B001-5774-J** (TB346 bulk)

**ST**

Stainless steel phil-slot
- **B001-7063-J** (TB300 bulk)
- **B001-7064-J** (TB345 bulk)

## Hardware options

Quick-connects — assembled: TB300 only; 0.25" x 0.031" terminals, 20 amps maximum. For other orientations, contact factory.

**QC1**

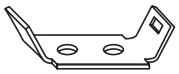

**QC2**

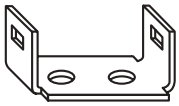

**QC3**

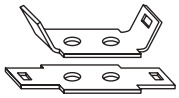

**QC4**

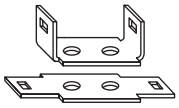

**QC5**

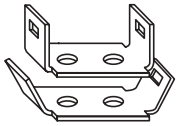

**QC6**

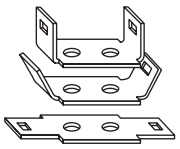

**QC7**

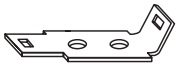

**QC8**

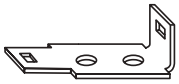

**QC9**

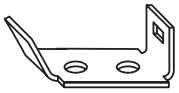

**QC10**

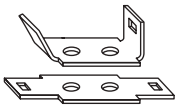

**QC11**

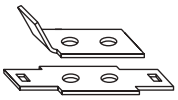

**QC12**

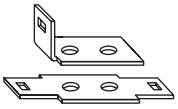

**QC13**

**QC14**

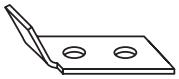

**QC15**

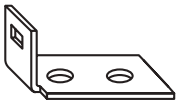

**QC16**

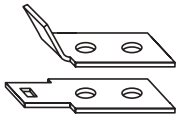

**QC17**

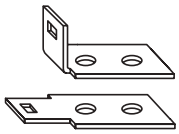

**QC18**

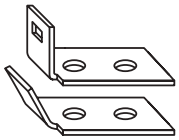

**QC19**

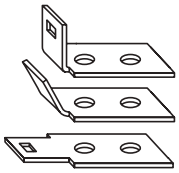

**QC20**

Quick-connects — bulk: *TB300 only; minimum order 100 pieces per catalog number.

**QC201-J**
Flat — blank

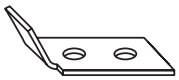

**QC202-J**
QC 45° — blank

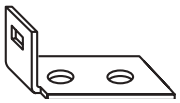

**QC203-J**
QC 90° — blank

**QC204-J**
Flat — Flat

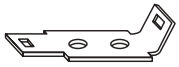

**QC205-J**
Flat — QC 45°

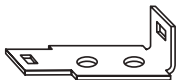

**QC206-J**
Flat — QC 90°

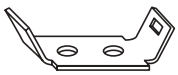

**QC207-J**
QC 45° — QC 45°

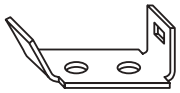

**QC208-J**
QC 45° — QC 90°

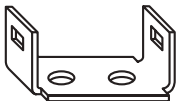

**QC209-J**
QC 90° — QC 90°

Jumpers — bulk: TB300 only; minimum order 100 pieces per catalog number. Contact factory for jumper assembly.

**J301**
Flat slip-on
**J301-J** (bulk)

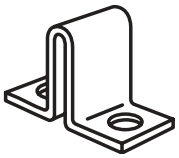

**OJ6**
Closed over barrier
**OJ6-J** (bulk)

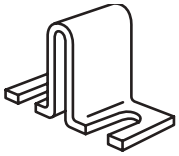

**OJ11**
Slip-on over barrier
**OJ11-J** (bulk)

## Marking options and covers for double row terminal blocks

### Standard marking

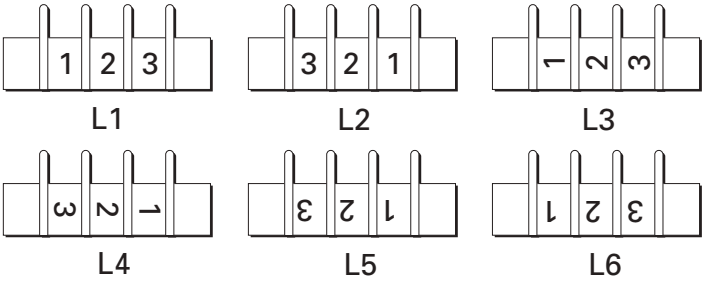


Standard markings are applied directly to the side(s) of a block. The standard marking color is white. The standard numeral height is 0.125 inches (3mm).

Note: Blocks marked on both sides require a different code for each side. Example: Style L1 on one side of the block requires Style L2 on the other side to ensure common terminal marking. To order, add appropriate suffix (L1, L2, L3, L4, L5 and/or L6) to block catalog number in the proper sequence.

### Special marking*

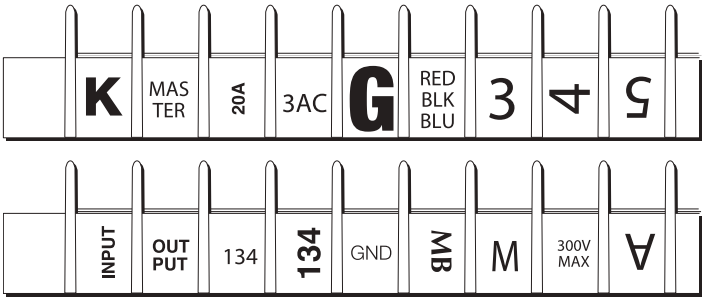


Special markings are available at an additional charge. Drawing(s) must be submitted to ensure accuracy of part required. Consult factory for price and delivery.

* Not available on TB400 products

### Covers

**(must be ordered separately)**

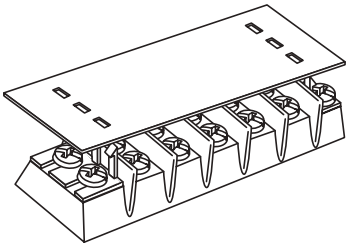

Covers prevent personnel, screws and foreign items from contacting live terminals, and are available in white (opaque) or clear plastic. Two cover clips are supplied with each cover. The cover width is 1.31 inches (33mm). Example: 10 position cover, white, TB100 = catalog number X12010.

| Catalog no. | For block family |
|---|---|
| **DD1-J** | TB100 |
| **DD2-J** | TB200 |
| **DD2HB-J** | TB200HB |
| **DD3-J** | TB300 |

### Cover catalog number build-a-code†

| Symbol | Cover strip† | Poles | High barrier option only |
|---|---|---|---|
| X | | | |
| | **119** = TB100 - clear | **02** to **36** (TB100) | **HB** = High barrier†† |
| | **120** = TB100 - white | **02** to **30** (TB200/TB200HB) | |
| | **219** = TB200/TB200HB - clear | **02** to **24** (TB300/TB345) | |
| | **220** = TB200/TB200HB - white | | |
| | **319** = TB300/TB345 - clear | | |
| | **320** = TB300/TB345 - white | | |

† Cover strip not available for TB400 products.
†† Applicable to X219 and X220 only.

### Cover clips — bulk

## Top marker strips

## (order separately from blocks)

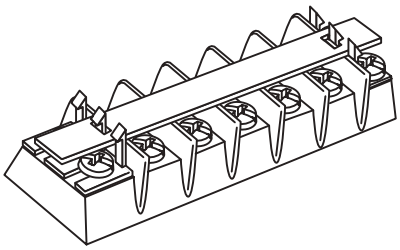

Top mounting marker strips must be ordered separately and are only available in white (opaque) plastic. Two cover clips are supplied with each marker strip.

Example: 12 position cover, TB200, 0.032" x 0.312" = catalog number X20312.

Example: 12 position cover, TB200HB, 0.06" x 0.50" = catalog number X23312HB.

### Top marker strip catalog number build-a-code

| Series | Top marker strip† | Poles | High barrier option only |
|---|---|---|---|
| X | | | |
| | **103** = TB100 (0.032 thk x 0.312 w) | **02** to **36** (TB100) | **HB** = High barrier†† |
| | **133** = TB100 (0.060 thk x 0.500 w) | **02** to **30** (TB200/TB200HB) | |
| | **203** = TB200/TB200HB (0.032 thk x 0.312 w) | **02** to **24** (TB300/TB345) | |
| | **233** = TB200/TB200HB (0.060 thk x 0.500 w) | | |
| | **303** = TB300/TB345 (0.032 thk x 0.380 w) | | |
| | **333** = TB300/TB345 (0.060 thk x 0.500 w) | | |

† Marking strips not available for TB400 products
††Applicable to X203 and X233 only.

## Bottom marker strips

## (order separately from blocks)

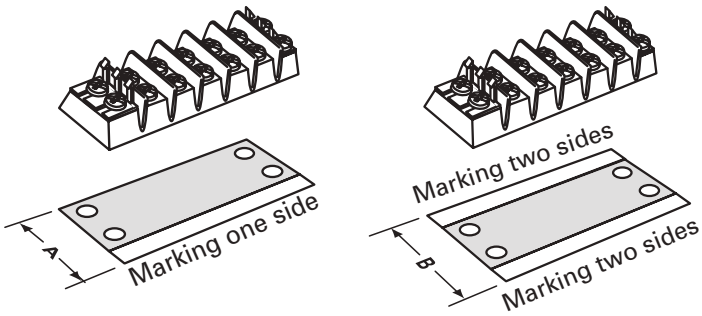


Bottom mounting marker strips are made of 0.03" thick black PVC. Space is available along the edge to handle most marking needs. All marker strips must be ordered separately.

To order, specify catalog number and required marking orientation. Example: 13 position strip, TB100 with no markings, space for marking one side = catalog number X10513. Consult factory for specials.

Standard numeral height is 0.125". Standard markings are 0-99. Special markings are available on special order. Drawing(s) must be submitted to ensure accuracy of part required.

### Dimensions — in

| | For TB block | | | | | |
|---|---|---|---|---|---|---|
| Dim. | TB100 | TB200 | TB200HB | TB300 | TB345 | TB400 |
| A | 1.13 | 1.37 | 1.62 | 1.58 | 1.58 | N/A |
| B | 1.38 | 1.62 | 1.81 | 1.81 | 1.81 | N/A |

### Bottom marker strip catalog number build-a-code

| Symbol | Bottom Marker Strip† | Poles | Marking orientation |
|---|---|---|---|
| X | | | |
| | **101** = TB100 marking both sides | **02** to **36** (TB100) | **BF** = Bottom forward |
| | **105** = TB100 marking one side | **02** to **30** (TB200/TB200HB) | **BR** = Bottom reverse |
| | **201** = TB200 marking both sides | **02** to **24** (TB300/TB345) | **TF** = Top forward |
| | **205** = TB200 marking one side | | **TR** = Top reverse |
| | **291** = TB200HB marking both sides | | |
| | **295** = TB200HB marking one side | | |
| | **301** = TB300 and TB345 marking both sides | | |
| | **305** = TB300 and TB345 marking one side | | |

† Not available for TB400 products.

## TB400 double row terminal blocks

### Ratings

TB400-05

- Volts 600 V
- Amps 75 A
- Breakdown voltage 7500 V

### Agency information

- UL File E62622, CSA File 47235; IEC Compliance

### Specifications

- Poles: 2 to 12
- Wire range: 6-14 AWG Cu
- Center spacing: 0.687" or 11/16" (17mm)
- Distance between barriers: 0.56" (14mm)
- Screw size: #10-32 phil-slot screws
- Torque rating: 20 lb-in
- Mounting: #10 screws
- Operating temperature: -40°C to 130°C (-40°F to 266°F)

### Materials

- Molded black thermoplastic base, UL rated 94V0
- Tin-plated brass terminals
- Zinc-plated steel screws

### Dimensions — in

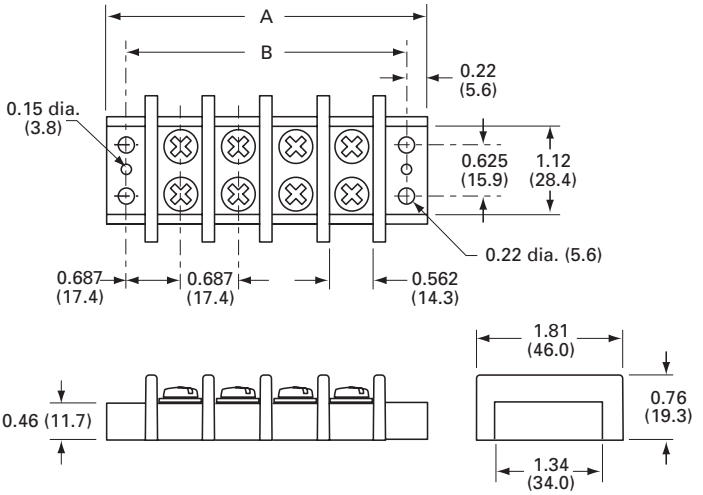


| Poles | A | B | Poles | A | B | Poles | A | B |
|---|---|---|---|---|---|---|---|---|
| 02 | 2.51 | 2.06 | 06 | 5.26 | 4.81 | 10 | 8.01 | 7.56 |
| 03 | 3.20 | 2.75 | 07 | 5.95 | 5.50 | 11 | 8.70 | 8.25 |
| 04 | 3.89 | 3.44 | 08 | 6.64 | 6.19 | 12 | 9.39 | 8.94 |
| 05 | 4.58 | 4.13 | 09 | 7.33 | 6.88 | | | |

1" = 25.4mm.

### Screw options

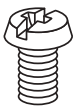
Brass nickel-plated phil-slot
**B500-023-028-J** (bulk)

Stainless steel phil-slot
**B001-7064-J** (bulk)

### Hardware options

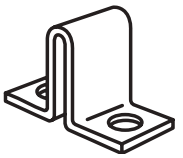
**OJ14**: Closed over barrier
**OJ14-J** (bulk)

### Catalog number build-a-code

| Symbol | | Poles | Screw options |
|---|---|---|---|
| TB400 | — | | |
| | | **02** to **12** | **Blank** = Zinc-plated steel phil-slot |
| | | | **00** = Screws shipped bulk |
| | | | **B** = Nickel-plated brass phil-slot |
| | | | **ST** = Stainless steel, phil-slot |

### Accessories

- **OJ14** - Jumper over barrier, consult factory for pole configuration

# KU double row terminal blocks

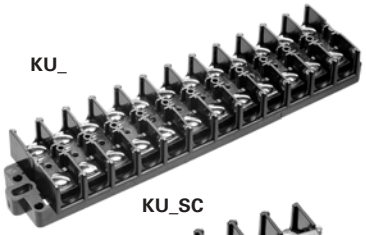


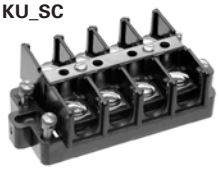


## Ratings

- Volts 600 V
- Amps 60 A*

* 60 A rating achieved with 6 AWG Cu wire crimped to ring terminal.

## Agency information

- UL File E62622, CSA File 47235

## Specifications

- Poles: 2 to 12
- Wire range: 6-22 AWG Cu
- Center spacing: 0.625" (16mm)
- Screw size: #10-32
- Torque rating: 20 lb-in
- Distance between barriers: 0.437" (11mm)
- Mounting: Panel mount
- Operating temperature: 105°C (221°F) max.

## Materials

- Molded black Noryl base, UL rated 94V1
- Terminal plating: Nickel-plated brass terminals
- Zinc-plated steel screws

## Dimensions — in

| | KU | | KUX only |
|---|---|---|---|
| Poles | A | B | A |
| 02 | 2.50 | 1.62 | 2.00 |
| 04 | 3.75 | 2.87 | 3.25 |
| 06 | 5.00 | 4.12 | 4.50 |
| 08 | 6.25 | 5.37 | 5.75 |
| 10 | 7.50 | 6.62 | 7.00 |
| 12 | 8.75 | 7.87 | 8.25 |

1" = 25.4mm.

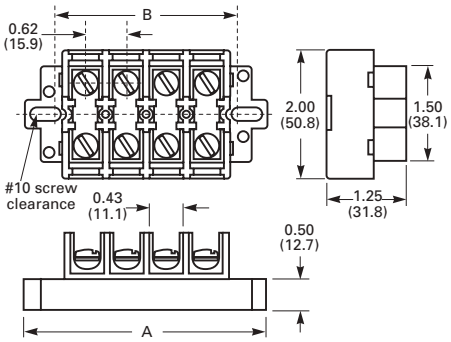


## Accessories (order separately)

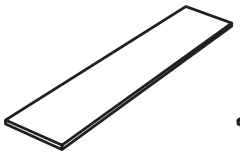

MTMU(poles)
Molded marking tape, matte finish

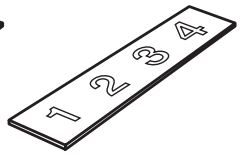


NUM(poles)
Molded marking tape

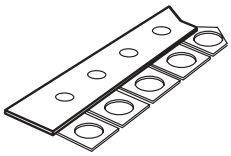

JU12
Jumper, 12 circuits

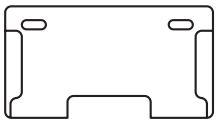

NUE
End piece for NUC

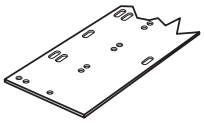

NUC(poles)
Cover

## Catalog number build-a-code - KU versions

| Symbol / for | Poles | | Screw options | Covers | Marking strip |
|---|---|---|---|---|---|
| | | — | | | |
| **KU /** Standard block | **2**<br>**4**<br>**6**<br>**8**<br>**10**<br>**12** | | **00** = Screws shipped bulk | **WC** = Top cover and2 end plates | **MT** = Matte finish |
| **KUX /** Short block | | | **BP** = Brass phil-slot, nickel-plated | | **NU** = Numbered 1 to 12, horizontal |
| **KURL /** Standard w/removable link | | | **P** = Steel screw w/pressure plate zinc-plated | | **NUV** = Numbered 1 to 12, vertical |
| **KUXRL /** Short block w/removable link | | | **W** = Brass washer head, nickel-plated | | **PT** = Marker strip for cover† |

## Catalog number build-a-code - KU__SC versions

| Symbol / for | Poles | | Screw options | Covers | Marking strip |
|---|---|---|---|---|---|
| | | — | | | |
| **KUSC /** Standard w/shorting strap and 4 shorting screws | **2**<br>**4**<br>**6**<br>**8**<br>**10**<br>**12** | | **00** = Screws shipped bulk | **WC** = Top cover and 2 end plates | **PT** = Marker strip for cover† |
| **KUXSC /** Short block w/shorting strap and 4 shorting screws | | | **BP** = Brass phil-slot, nickel-plated | | |
| | | | **P** = Steel screw w/pressure plate, zinc-plated | | |
| | | | **W** = Brass washer head, nickel-plated | | |

† Requires WC cover option

## End brackets

### BRKT-ND

Use with DRL35MMHI
DRL35MMLO

Dimensions — mm

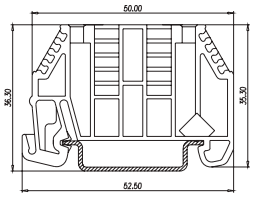


### BRKT-NDSCRW

Use with DRL35MMHI
DRL35MMLO

Dimensions — mm

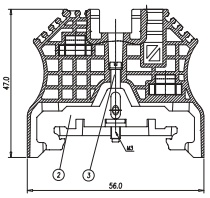


### BRKT-NDSCRW2

Use with DRL35MMHI
DRL35MMLO

Dimensions — mm

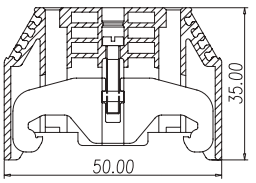


### BRKT-NDSCRW3

Use with DRL35MMHI
DRL35MMLO

Dimensions — mm

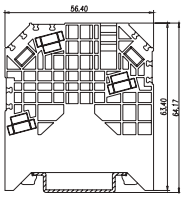


## Mounting rails and brackets

### DRL35MMLO*

Low profile
35mm DIN-Rail

### DRL35MMHI*

High profile
35mm DIN-Rail

### NFTA**

C-Rail

### NRA**

C-Rail

### BRKT-ANGL

Angle bracket

### BRKT-FLT

Flat bracket

* Available in 1 meter lengths only.
**Cut-to-length. Consult your Bussmann series product representative for details.

# The power of space

The Bussmann™ series Compact Circuit Protector for Class CF CUBEFuse™ delivers the smallest footprint compared to any Class J disconnect solution — requiring up to 51% less space.

## Contents


| Description | Section page |
|---|---|
| **Compact Circuit Protector disconnect switches** | |
| Class CC, UL supplemental and IEC 10x38mm (CCP2) | 2-5 |
| Class CF CUBEFuse up to 100 A (CCP2-CF) | 6-11 |
| CCP2 Accessories | 12-16 |
| Selector and pistol handles, and shafts | 12 |
| Multi-wire lug kits | 13 |
| PLC fuse monitor | 14-15 |
| Auxiliary contacts | 16 |
| Ordering CC, UL supplemental and IEC 10x38mm (CCP2) | 17-23 |
| Ordering CF CUBEFuse up to 100 A (CCP2-CF) | 24-28 |
| Compact Circuit Protector Base (CCP2B) | 29-31 |
| Low profile Class CC and G, UL supplemental and IEC 10x38mm (CCPLP) | 32-33 |
| **UL 98 fused disconnect switches, 30 to 800 A** | |
| Introduction and agency information | 34 |
| Product line summary — UL | 35 |
| 30 A Class CC and compact Class J | 36-37 |
| 30 A standard Class J | 38-39 |
| 60 A compact Class J | 40-41 |
| 60 A standard Class J | 42-43 |
| 100 A standard Class J | 44-45 |
| 200 A and 400 A standard Class J | 46-48 |
| 600 A standard Class J and 800 A Class L | 49-50 |
| **UL 98 non-fused disconnect switches, 30 to 1200 A** | |
| Introduction, agency information and IEC product summary | 51 |
| UL product summary | 52 |
| 30 A, 60 A and 100 A compact | 53-54 |
| 100 A, 200 A and 400 A standard | 55-56 |
| 600 A, 800 A, 1000 A and 1200 A standard | 57-58 |
| **UL 508 non-fused disconnect switches, 16 to 80 A** | |
| Introduction, agency information and IEC product summary | 59 |
| UL product summary | 60 |
| 16 A, 25 A, 40 A, 63 A and 80 A | 61-63 |
| **Enclosed UL 98 and UL 508 disconnect switches** | |
| Introduction and agency information | 64 |
| Fused UL 98 enclosed disconnects, 30 to 800 A | 65-66 |
| Non-fused UL 98 enclosed disconnects, 30 to 1200 A | 67-68 |
| Non-fused UL 508 enclosed disconnects, 16 to 80 A | 69-70 |

## Next generation Compact Circuit Protector

For use with Class CC, Supplemental and IEC 10x38 mm fuses

RoHS 2011/65/EU

CCP2 switch

CCP2 right front rotary switch

CCP2 left front rotary switch

CCP2 right side rotary switch

CCP2 left side rotary switch

### Catalog symbols

| Symbol | Fuse type | Description |
|---|---|---|
| CCP2-(poles)-30CC | Class CC | Switch only |
| CCP2-(poles)-30M | UL sup./IEC 10x38 | |
| CCP2-1-DCC | Class CC Vdc | 1-pole switch only |
| CCP2-1-DCM | UL sup./IEC 10x38 Vdc | |
| CCP2R-(poles)-30CC | Class CC | Right front rotary switch |
| CCP2R-(poles)-30M | UL sup./IEC 10x38 | |
| CCP2RL-(poles)-30CC | Class CC | Left front rotary switch |
| CCP2RL-(poles)-30M | UL sup./IEC 10x38 | |
| CCP2S-(poles)-30CC | Class CC | Right side rotary switch |
| CCP2S-(poles)-30M | UL sup./IEC 10x38 | |
| CCP2SL-(poles)-30CC | Class CC | Left side rotary switch |
| CCP2SL-(poles)-30M | UL sup./IEC 10x38 | |

### Description

The revolutionary next generation Bussmann™ series Compact Circuit Protector (cat. no. CCP2) fused disconnect switch is 3/5 the footprint of a traditional fusible switch and provides up to a high 200 kA Short-Circuit Current Rating (SCCR) to help improve panel and assembly SCCR.

The 35 mm DIN-Rail mount CCP is available in a variety of configurations to meet many application needs including rotary operation.

Application flexibility is extended with an optional multi-wire lug kit, with finger-safe shrouds, that provides three additional wire ports on each pole for power distribution applications.

Other accessories include a PLC interface device for open fuse monitoring and NO/NC auxiliary contacts that easily integrate into many monitoring systems.

Front and side rotary operated versions are easily applied for through-the-door or through the left or right side operation to enhance safety.

### Ratings

- Volts
  - 600 Vac (UL® Class CC)
  - 240 Vac (UL Supplemental)
  - 400 Vac (IEC 10x38 mm)
  - 80 Vdc (DC Class CC, DC UL Supplemental/IEC)
- Amps
  - 30 A (UL)
  - 32 A (IEC)
- SCCR
  - 200 kA (UL Class CC)
  - 10 kA (UL Supplemental)
  - 120 kA (IEC 10x38 mm max)
  - 20 kA (DC Class CC/UL)
  - 10 kA (DC UL Supplemental/IEC)

### Poles

- 1-, 2- and 3-poles catalog number dependent

### Agency information

- UL Class CC fuse versions
  - UL 98 Listed, Guide WHTY, File E302370
  - cULus to Canadian Standard 22.2 No. 4-04, UL Guide WHTY7, File 302370

**Data sheet no. 10789**

### Agency information continued

- UL Supplemental and IEC 10x38 mm fuse versions
  - UL 508 Listed, Guide NRNT, File E320230
  - cULus Certified 22.2 No. 14-05
  - IEC 60947-3 AC-23A
- DC voltage UL Class CC version (CCP2-1-DCC)
  - UL 508 Listed, cULus 22.2, No. 1405
- DC IEC 10x38 version (CCP2-1-DCM)
  - IEC 60947-3, DC-23A
- RoHS compliant
- CE

### Conductors/terminals

- 75°C Cu/Al, see conductor tables for size, type and torque information
- Box lug, single/dual conductor
- Fork terminal suitable for line, load or accessory connection
- Multi-wire lug kit — see page 11-13 for details

### Storage and operating temperature

- - 20°C to 75°C (-4°F to 167°F)*

* For fuse performance under or above 25°C, consult fuse performance derating charts in the Bussmann Division publication no. 3002, titled Selecting Protective Devices (SPD)

### Lockout/tagout provisions

- Switch only — 4 mm lock or Brady pin-out device part number 90850
- Switch with rotary operating mechanism — 1/4" lock

### Minimum enclosure size

- Switch 10" x 8" x 6" (254 x 203 x 152 mm)

### Mounting

- 35 mm DIN-Rail

### Local open fuse indication minimum voltage**

- 90 Vac for AC switches
- 12 Vdc for DC switches

** Open fuse indication requires an open fuse to be in the CCP2 and the switch in the ON position.

### Accessories

- Multi-wire lug kit with terminal shrouds
- Selector and pistol handles for use with rotary operated switches
- 8 mm shafts for use with selector and pistol handles
- Auxiliary contacts
- PLC fuse monitor

### Carton quantity and shipping weight

| Item | Poles | Weight lbs (kg) |
|---|---|---|
| Switch only | 12 | 2.84 (1.29) |
| Switch with side rotary mechanism | 2 | 0.9 (0.404) |
| | 3 | 1.12 (0.509) |
| Switch with front rotary mechanism | 2 | 0.95 (0.431) |
| | 3 | 1.18 (0.537) |

### Features

- Extremely compact (18 mm wide per pole ) design
- High SCCR up to 200 kA (UL Class CC) and 120 kA (IEC)
- Disconnect rated for load isolation
- Full voltage rated up to 600 Vac or 80 Vdc
- UL 98 Listed Class CC version is horsepower rated and suitable for branch circuit protection and disconnect
- IEC 10x38 version complies with IEC 60947-3 and suitable for branch circuit protection and disconnect
- Suitable for global installations, the switches comply with UL, cULus and IEC standards accepting UL Class CC, Supplemental or IEC aM and gG/gL fuses
- Open fuse indication
  - Standard local open fuse indicating light for each pole
  - Optional PLC fuse monitor can be utilized to signal a PLC and open a contactor to de-energize all phases, if required
- IP20 finger-safe with 10 AWG (6 mm$^2$) or larger wire (box lug terminals only)
- Built-in switch interlock prohibits removing the fuse under load
- Padlockable handle for lockout/tagout
  - 4 mm lock for switch only
  - 1/4" lock for rotary operated switches
- Rotary operated versions provide for through-the-door and through-the-side operation flexibility and enhanced safety with:
  - Right front switch operation
  - Left front switch operation
  - Right side switch operation
  - Left side switch operation
- Optional selector and pistol handles available for use with rotary operated versions
- Multi-wire lug kit with terminal shrouds allows for power distribution to multiple loads. Each lug has three ports rated for single and dual wires (see lug kit in accessories for conductor and torque details).

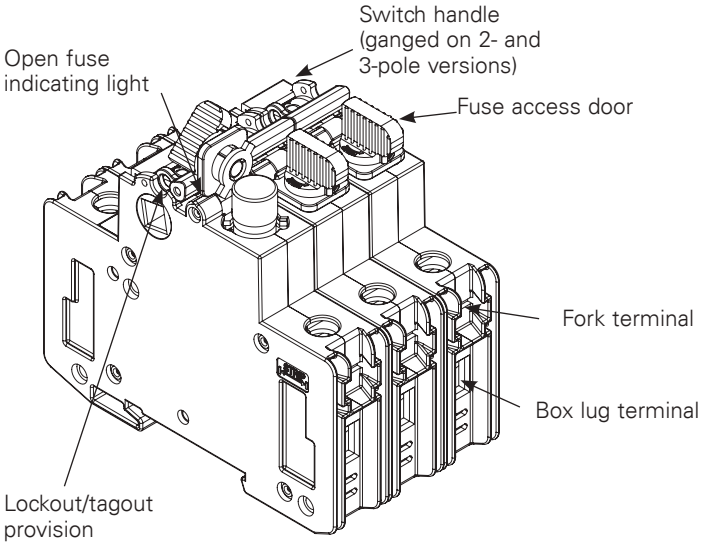




**Data sheet no. 10789**

## Catalog numbers

| Catalog no. | Poles | Description | Amps | Volts | SCCR | Max horsepower rating (Vac) 120 | 240 | 480 | 600 | Wire type/ size* |
|---|---|---|---|---|---|---|---|---|---|---|
| **Class CC** | | | | | | | | | | |
| CCP2-1-30CC | 1 | Switch only | 30 A | 347 Vac | 200 kA | 1/2 | — | — | — | 75°C Cu/Al 4-18 AWG Fork terminal†† |
| CCP2-2-30CC | 2 | | | 600 Vac | | — | 2 | — | — | |
| CCP2-3-30CC | 3 | | | | | 3/4 | 3 | 5 | 7.5 | |
| CCP2R-2-30CC | 2 | Switch with right front rotary operation | | 600 Vac | | — | 2 | | | |
| CCP2R-3-30CC | 3 | | | | | 3/4 | 3 | 5 | 7.5 | |
| CCP2RL-2-30CC | 2 | Switch with left front rotary operation | | 600 Vac | | — | 2 | — | — | |
| CCP2RL-3-30CC | 3 | | | | | 3/4 | 3 | 5 | 7.5 | |
| CCP2S-2-30CC | 2 | Switch with right side rotary operation | | 600 Vac | | — | 2 | — | — | |
| CCP2S-3-30CC | 3 | | | | | 3/4 | 3 | 5 | 7.5 | |
| CCP2SL-2-30CC | 2 | Switch with left side rotary operation | | 600 Vac | | — | 2 | — | — | |
| CCP2SL-3-30CC | 3 | | | | | 3/4 | 3 | 5 | 7.5 | |
| **UL Supplemental and IEC 10x38 mm** | | | | | | | | | | |
| CCP2-1-30M | 1 | Switch only | UL 30 A IEC 32 A** | UL 240 Vac† IEC 400 Vac† | UL 10 kA† IEC 120 kA† | — | — | — | — | 75°C Cu/Al 4-18 AWG Fork terminal†† |
| CCP2-2-30M | 2 | | | | | | | | | |
| CCP2-3-30M | 3 | | | | | | | | | |
| CCP2R-2-30M | 2 | Switch with right front rotary operation | | | | | | | | |
| CCP2R-3-30M | 3 | | | | | | | | | |
| CCP2RL-2-30M | 2 | Switch with left front rotary operation | | | | | | | | |
| CCP2RL-3-30M | 3 | | | | | | | | | |
| CCP2S-2-30M | 2 | Switch with right side rotary operation | | | | | | | | |
| CCP2S-3-30M | 3 | | | | | | | | | |
| CCP2SL-2-30M | 2 | Switch with left side rotary operation | | | | | | | | |
| CCP2SL-3-30M | 3 | | | | | | | | | |
| **Single-pole DC switches** | | | | | | | | | | |
| CCP2-1-DCC | 1 | UL Class CC | 30 A | 80 Vdc† | 20 kA† | — | — | — | — | 75°C Cu/Al 4-18 AWG Fork terminal†† |
| CCP2-1-DCM | 1 | UL supplemental | 30 A | 80 Vdc† | 10 kA† | — | — | — | — | |
| | | IEC 10x38 | 32 A** | | | | | | | |

* See box lug terminal conductor data table for details.
**32 A Class aM, 25 A Class gG.
† SCCR may be lower, refer to installed fuse data sheet for interrupting rating at applied voltage.
††Fork terminal with a 4.3 mm gap for a #8-32 stud, 30 A max, insulated flange, wire size 12-10 AWG.

**Data sheet no. 10789**

## Box lug terminal conductor data

| Type | AWG range | Class | Quantity | Torque N•m (lb-in) |
|---|---|---|---|---|
| Cu | 4-18 | Stranded, Class B to K | Single | 2.26 (20) |
| | 6-8 | Stranded, Class B/C | Dual | 3.39 (30) |
| | 6-8 | Stranded, Class K | Dual | 2.26 (20) |
| | 10-18 | Stranded, Class B to K | | |
| | 10-18 | Solid | Single/dual | |
| | 4-18 | Stranded, UL ferrule, Class B/C | Single | 3.39 (30) |
| | 6-18 | | Twin† | |
| | 4-18 | Stranded, UL ferrule, Class K | Single | 2.82 (25) |
| | 6-18 | | Twin† | |
| Al | 4-8 | Stranded | Single | 2.26 (20) |
| | 6 | | Dual | 2.82 (25) |
| | 8 | | | 2.26 (20) |

† Two stranded conductors placed in one UL Listed twin ferrule.

## Available Bussmann series fuses

| Fuse class | Type/description | Volts | Data sheet no. |
|---|---|---|---|
| CC | LP-CC time-delay | 600 Vac/300 Vdc* | 1023 |
| | FNQ-R time-delay | 600 Vac/300 Vdc | 1014 |
| | KTK-R fast-acting | 600 Vac | 1015 |
| M | FNM time-delay | 250 Vac | 2028 |
| | FNQ time-delay | 500 Vac | 1012 |
| | KTK fast-acting | 600 Vac | 1011 |
| | BAF fast-acting | 250 Vac | 2011 |
| | KLM fast-acting | 600 Vac/dc | 2020 |
| gG/gL | C10G | 500 V (400 V@32 A) | 720115 |
| aM | C10M | 500 V (400 V@20@25 A) | 720115 |

* 1/2 to 2-1/2 and 20 to 30 A are 300 Vdc, 2-8/10 to 15 A are 150 Vdc.

## Dimensions – mm (in)

### Switch

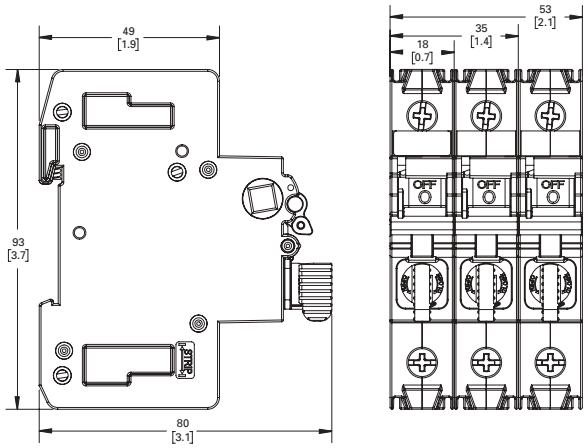


### Left front and right front rotary switches

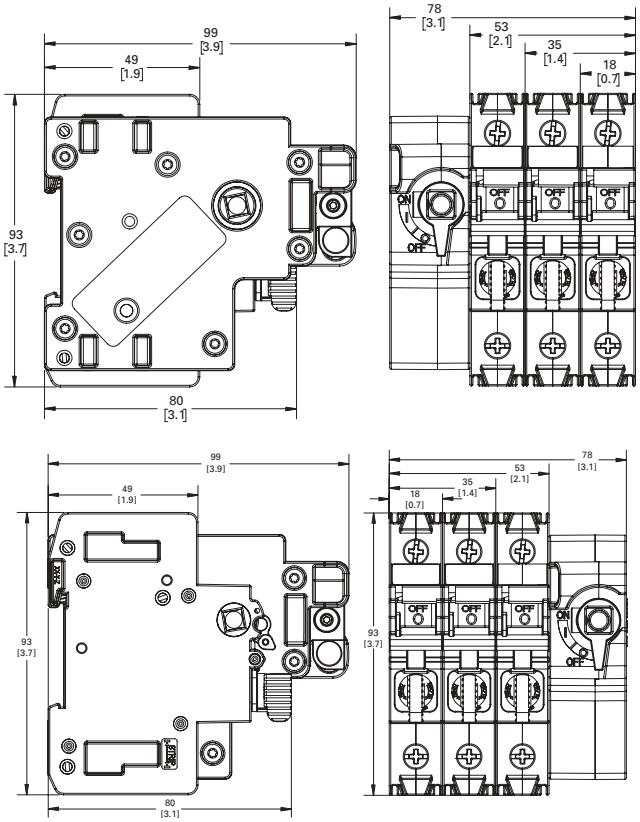


### Left side and right side rotary switches

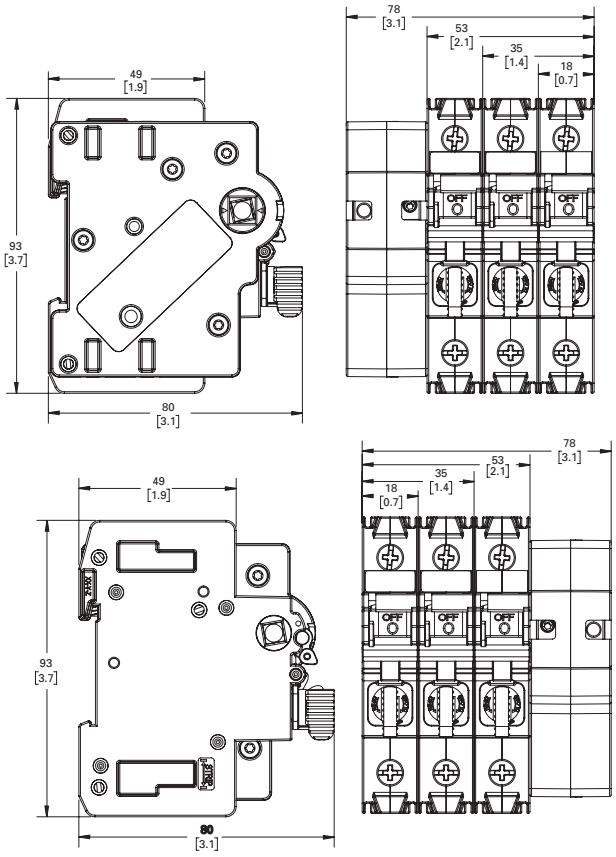


Disconnect switches

**Data sheet no. 10789**

## Compact Circuit Protector (CCP2)

### UL 98 Class CF disconnect switches up to 100 A

RoHS 2011/65/EU

CCP2 switch

CCP2 right front rotary switch

CCP2 left front rotary switch

CCP2 right side rotary switch

CCP2 left side rotary switch

### Catalog symbols for 30, 60 and 100 A switches

| Symbol | Amps | Description |
|---|---|---|
| CCP2-(poles)-30CF | 30 | Switch only |
| CCP2-(poles)-60CF | 60 | |
| CCP2-(poles)-100CF | 100 | |
| CCP2R-(poles)-30CF | 30 | Right front rotary, clockwise operated switch |
| CCP2R-(poles)-60CF | 60 | |
| CCP2R-(poles)-100CF | 100 | |
| CCP2RL-(poles)-30CF | 30 | Left front rotary, clockwise operated switch |
| CCP2RL-(poles)-60CF | 60 | |
| CCP2RL-(poles)-100CF | 100 | |
| CCP2S-(poles)-30CF | 30 | Right side rotary, clockwise operated switch |
| CCP2S-(poles)-60CF | 60 | |
| CCP2S-(poles)-100CF | 100 | |
| CCP2SL-(poles)-30CF | 30 | Left side rotary, counterclockwise operated switch |
| CCP2SL-(poles)-60CF | 60 | |
| CCP2SL-(poles)-100CF | 100 | |

### Description

The revolutionary Bussmann™ series Compact Circuit Protector (CCP2) fused UL® 98 branch circuit disconnect switch utilizing the UL Class CF time-delay or fast-acting CUBEFuse™. With 2/3 the footprint of a traditional fusible solution, these switches provide a high 200 kA SCCR to help improve panel and assembly SCCR.

The switch only versions of the 30, 60 and 100 A disconencts are direct, drop-in replacements for the earlier models (noted by a catalog number starting "CCP-"). The auxiliay contacts and PLC remote fuse indicator are backwards compatible. The multi-wire lug kits and terminal shourds are not.

The 35 mm DIN-Rail mount CCP2 is available in a variety of 30, 60 and 100 amp configurations to meet many application needs including rotary operation.

Application flexibility is extended with an optional multi-wire lug kit, featuring finger-safe shrouds, that provides three (30 and 60 A switches) and six (100 A switches) additional wire ports on each pole for power distribution applications.

Other accessories include a PLC fuse monitor for open fuse indication and NO/NC auxiliary contacts that easily integrated into many monitoring systems.

Front and side rotary operated versions are easily applied for through-the-door or through the left or rigth side operation to enhance safety.

### Ratings

- Volts
  - 600 Vac
  - 125 Vdc
- Amps
  - 30 A
  - 60 A
  - 100 A
- SCCR
  - 200 kA RMS Sym.
  - 100 kA DC

### Poles

- 1-, 2- and 3-poles catalog number dependent

**Data sheet no. 10801**

### Agency information

- UL 98 Listed, Guide WHTY, File E302370
- cULus to Canadian Standard 22.2 No. 4-04, Guide WHTY7, File 302370
- RoHS complaint
- CE

### Conductors/terminals

- 75°C Cu, see conductor tables for size, type and torque information
- Box lug, single/dual conductor
- Fork terminal suitable for line, load or accessory connection
- Multi-wire lug kit — see page 11-13 for details

### Storage and operating temperature

- - 20°C to 75°C (-4°F to 167°F)*

* For fuse performance under or above 25°C, consult fuse performance derating charts in the Bussmann Division publication no. 3002, titled Selecting Protective Devices (SPD)

### Lockout/tagout provisions

- 1/4" lock, direct use on switches without rotary mechanisms requires a lock with a straight shank of sufficient length to engage all poles

### Minimum enclosure size

- 30 and 60 A switch 10" x 8" x 6"(254 x 203 x 152 mm)
- 100 A switch, 12" x 10" x 6" (305 x 254 x 152 mm)

### Mounting

- 35 mm DIN-Rail

### Local open fuse indication minimum voltage**

- 90 Vac for AC switches
- 12 Vdc for DC switches

** Open fuse indication requires an open fuse to be in the CCP2 and the switch in the ON position.

### Accessories

- Multi-wire lug kit with terminal shrouds
- Selector and pistol handles for use with rotary operated switches
- 8 mm shafts for use with selector and pistol handles
- Auxiliary contacts
- PLC remote fuse indicator

### Carton quantity and shipping weight

| Item | Switches | Poles | Weight lbs (kg) |
|---|---|---|---|
| **30 and 60 amp switches** | | | |
| Switch only | — | 12 | 3.8 (1.7) |
| Switch with side rotary mechanism | 2-pole | — | 1.3 (0.6) |
| | 3-pole | — | 1.6 (0.7) |
| Switch with front rotary mechanism | 2-pole | — | 1.3 (0.6) |
| | 3-pole | — | 1.6 (0.7) |
| **100 amp switches** | | | |
| Switch only | — | 6 | 3.1 (1.4) |
| Switch with side rotary mechanism | 2-pole | — | 1.7 (0.8) |
| | 3-pole | — | 2.3 (1.0) |
| Switch with front rotary mechanism | 2-pole | — | 1.7 (0.8) |
| | 3-pole | — | 2.3 (1.0) |

### Features

- Uses UL Class CF time-delay or fast-acting CUBEFuse with Class J electrical performance
- Extremely compact design at 25.4mm (1 inch) wide per pole
- Amp rating rejection will not accept a CUBEFuse with amp ratings greater than switch rating
- High 200 kA short-circuit current rating
- Disconnect rated to provide means for load isolation
- Full voltage rated at 347 Vac (1-pole versions) and 600 Vac (2- and 3-pole versions)
- 125 Vdc* rated to meet specialized applications
- UL 98 Listed and suitable for branch circuit disconnect and branch circuit protection
- 1-, 2- and 3-pole versions are horsepower rated
- Open fuse indication:
  - Local fuse indication light on each pole standard
  - Optional PLC fuse monitor for wired remote open fuse indication by signaling a PLC and open a contactor to de-energize all phases, if required
- Additional open fuse indication can be provided by the time-delay CUBEFuse (6 to 100 A)
- IP20 finger-safe construction with 10 AWG (6mm$^2$) wire or larger
- Built-in switch interlock prohibits removing the fuse under load
- Padlockable for lockout/tagout procedures with a 1/4" lock
- Rotary operated versions provide for through-the-door and through-the-side operation flexibility and enhanced safety with:
  - Right front switch operation
  - Left front switch operation
  - Right side switch operation
  - Left side switch operation
- Optional selector and pistol handles available for use with rotary operated versions
- Multi-wire lug kit with terminal shrouds allows for power distribution to multiple loads. Each lug has three (30 and 60 A switches) or six (100 A switches) ports rated for single and dual wires (see lug kit in accessories for conductor and torque details).

* Switch amp rating and installed fuse amp rating dependent, see catalog number table for deetails.

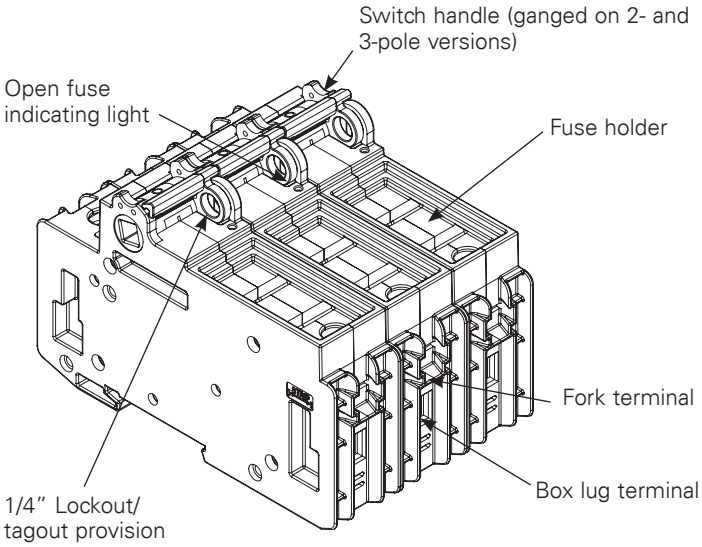




**Data sheet no. 10801**

### 30, 60 and 100 A switch catalog numbers

| Catalog no. | Poles | Description | Volts | SCCR | Max Hp rating (Vac) 120 | 240 | 480 | 600 |
|---|---|---|---|---|---|---|---|---|
| **30 amp switches** | | | | | | | | |
| CCP2-1-30CF | 1 | Switch only | 347 Vac/125 Vdc | 200 kA AC 100 kA DC | 1.5 | — | — | — |
| CCP2-2-30CF | 2 | | 600 Vac/125 Vdc | | — | 3 | — | — |
| CCP2-3-30CF | 3 | | 600 Vac | | — | 5 | 15 | 10 |
| CCP2R-2-30CF | 2 | Right front rotary, clockwise operated switch | 600 Vac/125 Vdc | | — | 3 | — | — |
| CCP2R-3-30CF | 3 | | 600 Vac | | — | 5 | 15 | 10 |
| CCP2RL-2-30CF | 2 | Left front rotary, clockwise operated switch | 600 Vac/125 Vdc | | — | 3 | — | — |
| CCP2RL-3-30CF | 3 | | 600 Vac | | — | 5 | 15 | 10 |
| CCP2S-2-30CF | 2 | Right side rotary, clockwise operated switch | 600 Vac/125 Vdc | | — | 3 | — | — |
| CCP2S-3-30CF | 3 | | 600 Vac | | — | 5 | 15 | 10 |
| CCP2SL-2-30CF | 2 | Left side rotary, counterclockwise operated switch | 600 Vac/125 Vdc | | — | 3 | — | — |
| CCP2SL-3-30CF | 3 | | 600 Vac | | — | 5 | 15 | 10 |
| **60 amp switches** | | | | | | | | |
| CCP2-1-60CF | 1 | Switch only | 347 Vac/125 Vdc* | 200 kA AC 100 kA DC | 3 | — | — | — |
| CCP2-2-60CF | 2 | | 600 Vac/125 Vdc* | | — | 7.5 | — | — |
| CCP2-3-60CF | 3 | | 600 Vac | | — | 7.5 | 20 | 10 |
| CCP2R-2-60CF | 2 | Right front rotary, clockwise operated switch | 600 Vac/125 Vdc* | | — | 7.5 | — | — |
| CCP2R-3-60CF | 3 | | 600 Vac | | — | 7.5 | 20 | 10 |
| CCP2RL-2-60CF | 2 | Left front rotary, clockwise operated switch | 600 Vac/125 Vdc* | | — | 7.5 | — | — |
| CCP2RL-3-60CF | 3 | | 600 Vac | | — | 7.5 | 20 | 10 |
| CCP2S-2-60CF | 2 | Right side rotary, clockwise operated switch | 600 Vac/125 Vdc* | | — | 7.5 | — | — |
| CCP2S-3-60CF | 3 | | 600 Vac | | — | 7.5 | 20 | 10 |
| CCP2SL-2-60CF | 2 | Left side rotary, counterclockwise operated switch | 600 Vac/125 Vdc* | | — | 7.5 | — | — |
| CCP2SL-3-60CF | 3 | | 600 Vac | | — | 7.5 | 20 | 10 |
| **100 amp switches** | | | | | | | | |
| CCP2-1-100CF | 1 | Switch only | 347 Vac/125 Vdc** | 200 kA AC 100 kA DC | 5 | — | — | — |
| CCP2-2-100CF | 2 | | 600 Vac/125 Vdc** | | — | 10 | — | — |
| CCP2-3-100CF | 3 | | 600 Vac | | — | 20 | 50 | 40 |
| CCP2R-2-100CF | 2 | Right front rotary, clockwise operated switch | 600 Vac/125 Vdc** | | — | 10 | — | — |
| CCP2R-3-100CF | 3 | | 600 Vac | | — | 20 | 50 | 40 |
| CCP2RL-2-100CF | 2 | Left front rotary, clockwise operated switch | 600 Vac/125 Vdc** | | — | 10 | — | — |
| CCP2RL-3-100CF | 3 | | 600 Vac | | — | 20 | 50 | 40 |
| CCP2S-2-100CF | 2 | Right side rotary, clockwise operated switch | 600 Vac/125 Vdc** | | — | 10 | — | — |
| CCP2S-3-100CF | 3 | | 600 Vac | | — | 20 | 50 | 40 |
| CCP2SL-2-100CF | 2 | Left side rotary, counterclockwise operated switch | 600 Vac/125 Vdc** | | — | 10 | — | — |
| CCP2SL-3-100CF | 3 | | 600 Vac | | — | 20 | 50 | 40 |

* 125 Vdc for installed fuse amp ratings up to 40 A. 24 Vdc for installed fuse amp ratings from 45 to 60 A.
**125 Vdc for installed fuse amp ratings up to 80 A, 24 Vdc for installed fuse amp ratings from 90 to 100 A.

**Data sheet no. 10801**

## Box lug terminal conductor data

| Wire type | AWG range | Class | Quantity | Torque N•m (lb-in) |
|---|---|---|---|---|
| **30 and 60 A switches** | | | | |
| 75°C Cu | 4-6 | Stranded, Class B to K | Single | 3.95 (35) |
| | 8-18 | | | 2.26 (20) |
| | 6-8 | Stranded, Class B/C | Dual | 3.39 (30) |
| | | Stranded, Class K | | 2.26 (20) |
| | 10-18 | Stranded, Class B to K | | |
| | 10-18 | Solid | Single/dual | 2.26 (20) |
| | 4-18 | Stranded, UL ferrule, Class B/C | Single | 3.39 (30) |
| | 6-18 | | Twin† | |
| | 4-18 | Stranded, UL ferrule, Class K | Single | 2.82 (25) |
| | 6-18 | | Twin† | |
| **100 A switches** | | | | |
| 75°C Cu | 12-18 | Stranded, Class B/C | Single | 2.26 (20) |
| | 10 | | | 2.82 (25) |
| | 8 | | | 4.52 (40 |
| | 4-6 | | | 5.08 (45) |
| | 1-3 | | | 6.21 (55) |
| | 4-12 | | Dual | 5.08 (45) |
| | 12-18 | Stranded, UL ferrule, Class B/C | Single | 2.26 (20) |
| | 10 | | | 3.95 (35) |
| | 1-8 | | | 4.52 (40) |
| | 10-18 | | Twin† | 2.26 (20) |
| | 6-9 | | | 2.82 (25) |
| | 10-18 | Solid | Single/Dual | 2.26 (20) |
| | 8-18 | Class K | Single | 2.26 (20) |
| | 1-7 | | | 3.39 (30) |
| | 3-10 | | Dual | 5.08 (45) |
| | 8-18 | Class K, UL ferrule | Single | 2.26 (20) |
| | 1-7 | | | 3.39 (30) |
| | 6-18 | | Twin | 2.26 (20) |

† Two stranded conductors placed in one UL Listed twin ferrule.

### Lineside and loadside fork terminal

- Max 30 A suitable with #8-32 UNC screw.

### Available Bussmann series fuses

| UL fuse class | Type/description | Volts | Data sheet no. |
|---|---|---|---|
| CF | Indicating time-delay, Low-Peak ™CUBEFuse (6-100 A) | 600 Vac/ 300 Vdc | 9000 |
| | Non-indicating time-delay, Low-Peak CUBEFuse (1-100 A) | | |
| | Non-indicating fast-acting CUBEFuse (1-100 A) | 600 Vac/dc | 2147 |

## Dimensions – mm (in)

**Switch** (shown with optional terminal shrouds)

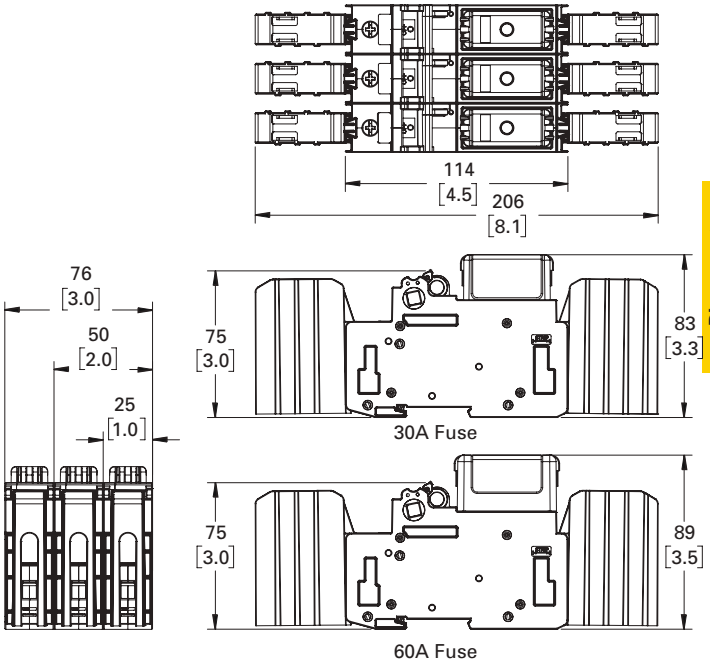


### 30 and 60 amp switches

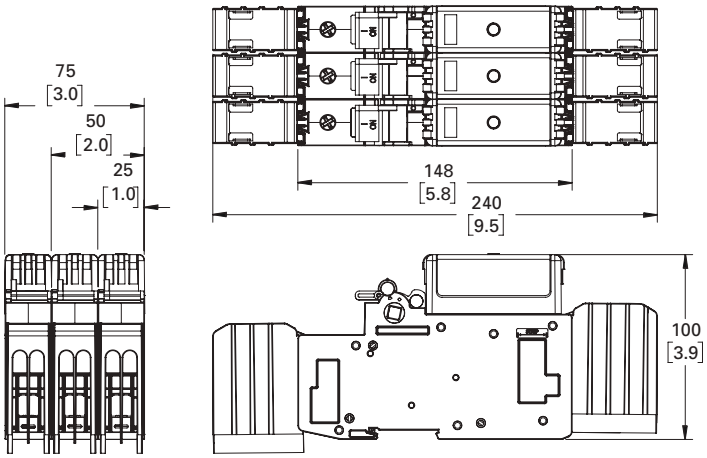


### 100 amp switches

**Left front rotary switches** (shown with optional terminal shrouds)

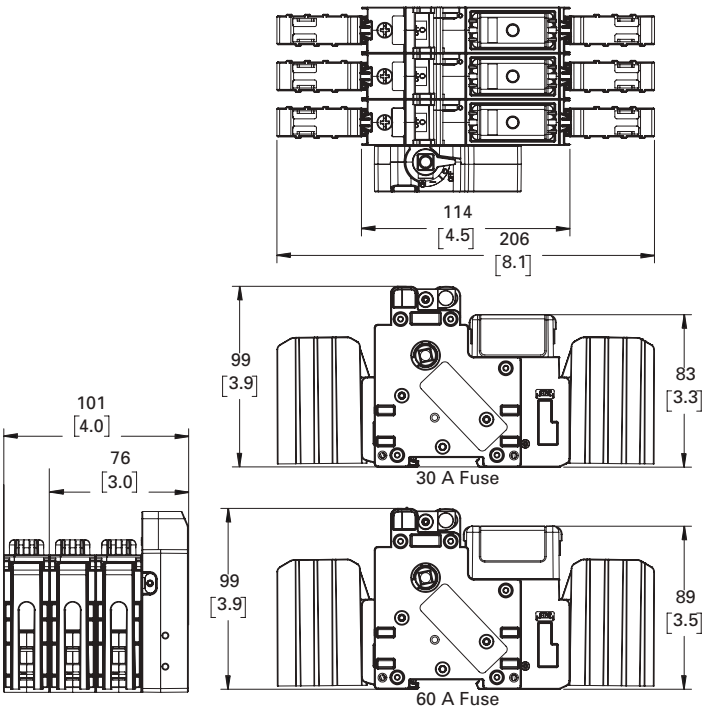


**30 and 60 amp switches**

**Right front rotary switches** (shown with optional terminal shrouds)

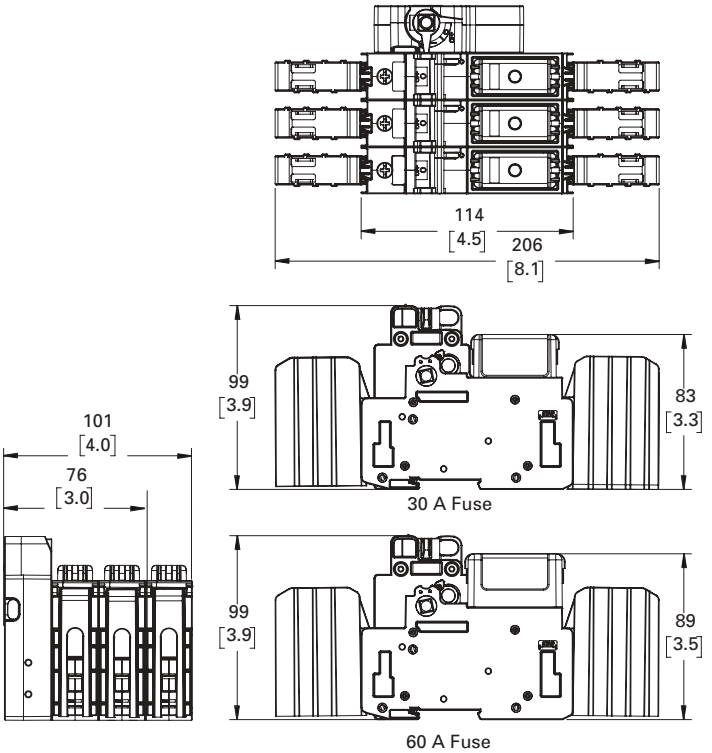


**30 and 60 amp switches**

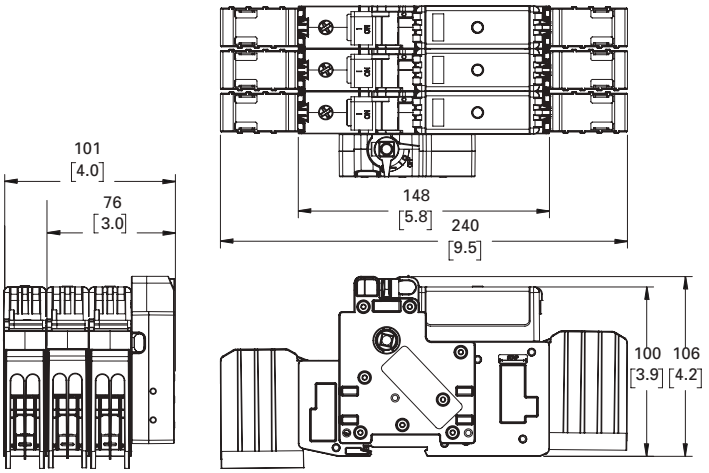


**100 amp switches**

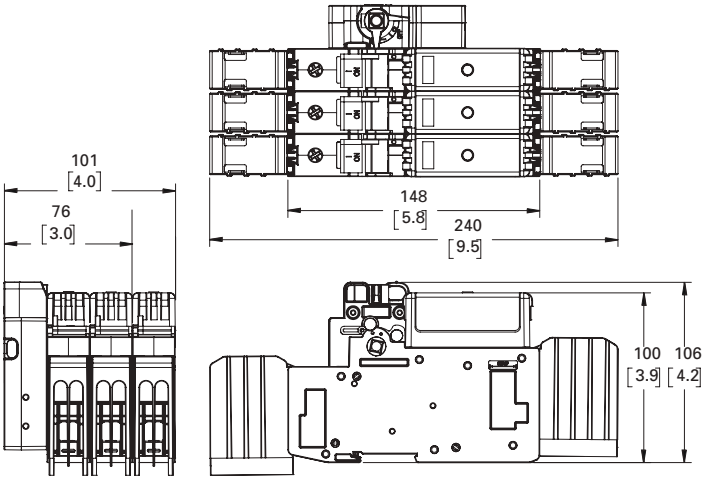


**100 amp switches**

**Data sheet no. 10801**

**Left side rotary switches** (shown with optional terminal shrouds)

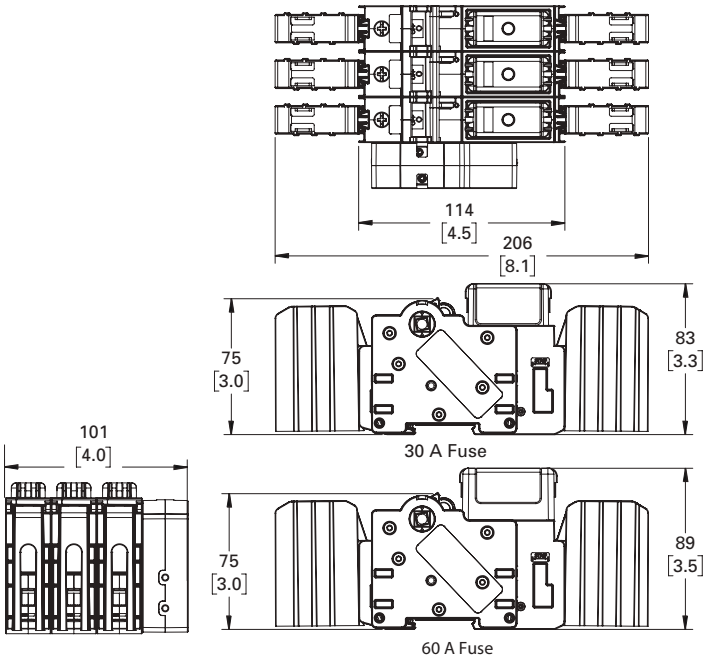


**30 and 60 amp switches**

**Right side rotary switches** (shown with optional terminal shrouds)

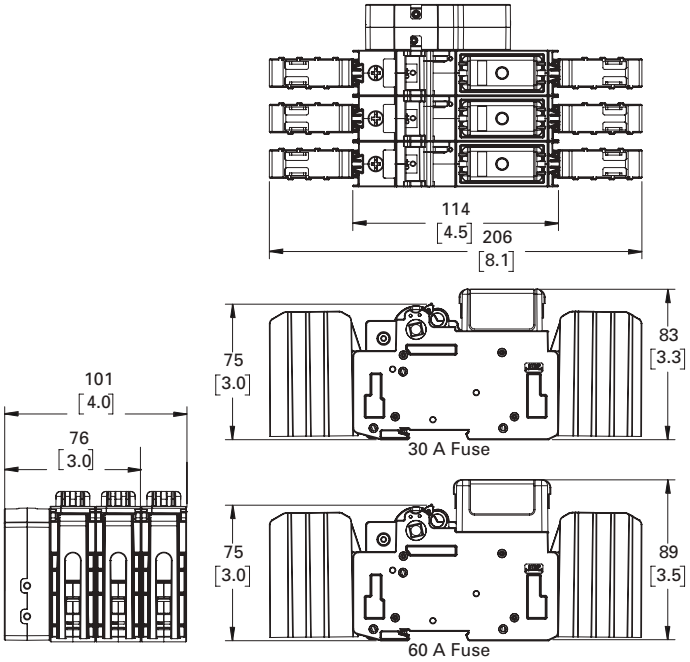


**30 and 60 amp switches**

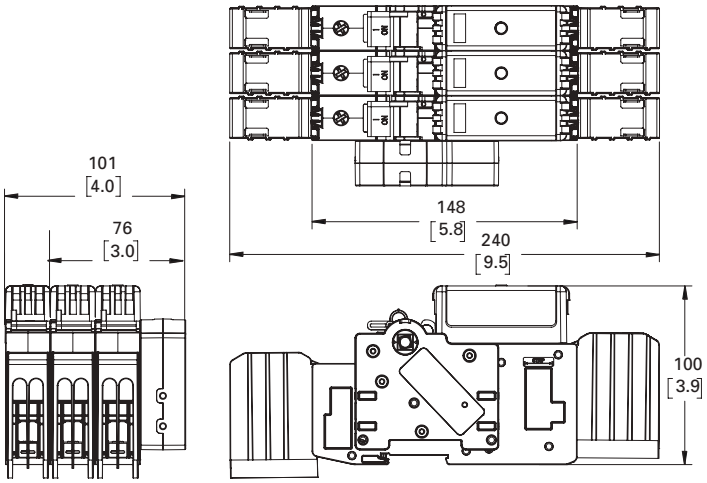


**100 amp switches**

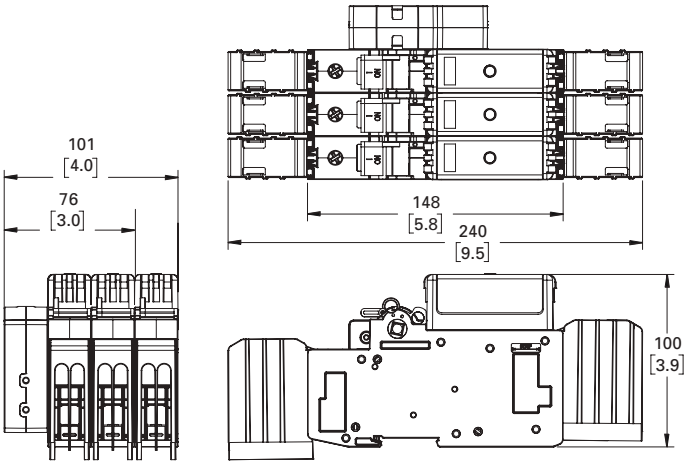


**100 amp switches**

## Selector and pistol handles

### Catalog symbol

- CCP2-H4X-_

### Description

Selector and pistol handles for use with any 2- and 3-pole CCP2 rotary operated switch. Both selector and pistol handles are available in black/grey and red/yellow colors and clockwise/counterclockwise operating modes. The application of clockwise and counterclockwise operation is dependent upon the CCP2 rotary switch configuration. Installation requires an 8 mm shaft (ordered separately).

Each handle is rated NEMA 4X and capable of accepting up to three (3) 1/4" locks for lockout/tagout in the OFF position. They can also be field configured for lock-on.

In application, only the clockwise operating handles in combination with either the left front or right front rotary switches provide a door interlock means to ensure the enclosure door remains shut during lockout/tagout or lock-on. Both clockwise and counterclockwise operating handles when mounted on the enclosure's left or right side do NOT provide a door interlock means.

See the catalog number table below for applicable rotary switch, handle and shaft combinations.

### Carton quantity and shipping weight

| Handle style | Qty. | Weight lbs (kg) |
|---|---|---|
| All selector handles | 1 | 1.1 (0.5) |
| All pistol handles | | 1.3 (0.59) |

### Agency information

- UL Listed, Guide DIHS/DIHS7, File E140305
- NEMA 4X rating
- RoHS compliant
- CE

### Storage and operating temperature

- -20°C to 75°C (-4°F to 167°F)

### Packaging

- Each handle is packaged individually as a kit

### Selector handles

**Clockwise**

- CCP2-H4X-B1
- CCP2-H4X-R1

**Counterclockwise**

- CCP2-H4X-B1L
- CCP2-H4X-R1L

### Pistol handles

**Clockwise**

- CCP2-H4X-B2
- CCP2-H4X-R2

**Counterclockwise**

- CCP2-H4X-B2L
- CCP2-H4X-R2L

## Handle shafts

### Catalog symbol

- CCP2-SH1-_

### Description

Eight millimeter square shafts available in 290 and 490 millimeter (11.5 and 19.3 inch) lengths. Shafts are indexed to ensure handle/switch orientation for correct operation. Shafts are to be cut to length when installed.

### Packaging

- Each shaft is packaged separately

### Handle shafts

| For these switch catalog numbers | Description/operation | Order these handle catalog numbers (description) | Order either shaft catalog number |
|---|---|---|---|
| CCP2R-(pole)-30(CC/M/CF) | Right front rotary, clockwise | • CCP2-H4X-B1 (selector, black/grey)<br>• CCP2-H4X-R1(selector, red/yellow)<br>• CCP2-H4X-B2 (pistol, black/grey)<br>• CCP2-H4X-R2 (pistol, red/yellow) | • CCP2-SH1-290 (11.5"/290 mm)<br>• CCP2-SH1-490 (19.3"/490 mm) |
| CCP2R-(pole)-60CF | | | |
| CCP2R-(pole)-100CF | | | |
| CCP2RL-(pole)-30(CC/M/CF) | Left front rotary, clockwise | | |
| CCP2RL-(pole)-60CF | | | |
| CCP2RL-(pole)-100CF | | | |
| CCP2S-(pole)-30(CC/M/CF) | Right side rotary, clockwise | | |
| CCP2S-(pole)-60CF | | | |
| CCP2S-(pole)-100CF | | | |
| CCP2SL-(pole)-30(CC/M/CF) | Left side rotary, counterclockwise | • CCP2-H4X-B1L (selector, black/grey)<br>• CCP2-H4X-R1L (selector, red/yellow)<br>• CCP2-H4X-B2L (pistol, black/grey)<br>• CCP2-H4X-R2L (pistol, red/yellow) | |
| CCP2SL-(pole)-60CF | | | |
| CCP2SL-(pole)-100CF | | | |

## Multi-wire lug kits

### Catalog numbers

- CCP2-MW1-3 (for 30 and 60 A switches only)
- CCP2-MW1-6 (for 100 A switches only)

### Description

The multi-wire lug kit permits expanding each box lug terminal on the switch into a three-port (30 and 60 A switches) or six-port (100 A switches) terminal for power distribution applications.

Each multi-wire lug kit comes with three lugs and three terminal shrouds. Shrouds provide finger-safe protection when properly installed.

Lugs may be mounted on either the loadside or lineside to meet various application needs.

Ports on any one lug accept any conductor combination listed, e.g., one of the ports may have dual 14 AWG wires and the other two ports single 10 AWG wires.

### Ratings

- Volts 600 V
- Amps
  - 60 A max (CCP2-MW1-3)
  - 100 A max (CCP2-MW1-6)
- SCCR 200 kA

### Agency information

- UL Recognized
- RoHS compliant

### Storage and operating temperature

- - 20°C to 75°C (-4°F to 167°F)

### Multi-wire lug conductor information

- 75°C Cu/AL
- AWG size and quantity per port - see table below

| Type | AWG range | Class | Quantity | Torque N•m (lb-in) |
|---|---|---|---|---|
| Cu/Al | 4-6 | Stranded, Class B/C | Single | 3.95 (35) |
| | 8 | | | 2.82 (25) |
| Cu | 10-14 | Stranded, Class B/C | Single/dual* | 2.26 (20) |
| | 10-14 | Solid | Single | 2.26 (20) |
| | 8 | UL ferrule, Class B to K | Single/twin† | 2.82 (25) |
| | 10-14 | | | 2.26 (20) |

* Dual wire to be same size and type.
† Two stranded conductors placed in one UL Listed twin ferrule.

### CCP2 box lug torque for multi-wire lugs

- 60 A lug, 4.52 N•m (40 lb-in)
- 100 A lug, 5.09 N•m (45 lb-in)

### Carton quantity and shipping weight

| Catalog no. | Description/application | Qty. | Weight lbs (kg) |
|---|---|---|---|
| CCP2-MW1-3 | Lug kit, 30/60 A switches | 3 lugs and 3 shrouds | 0.36 (0.16) |
| CCP2-MW-1-6 | Lug kit, 100 A switches | | 0.49 (0.22) |
| CCP2-TS1-3 | Shrouds, 30/60 A switches | 3 shrouds | 0.17 (0.077) |
| CCP2-TS1-6 | Shrouds, 100 A switches | | 0.2 (0.09) |

### Installed on CCP2-3-xx

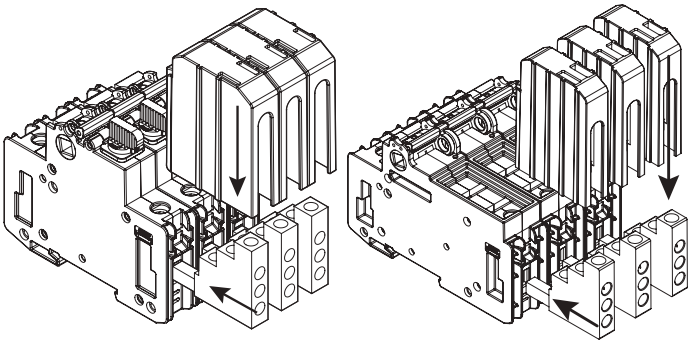

Multi-wire lugs mount in switch box lug terminals to provide three or six additional wire ports per pole. Lugs can be mounted on the switch lineside or loadside. Each multi-wire lug kit comes with three lugs and three shrouds.

### Wire insulation strip lengths

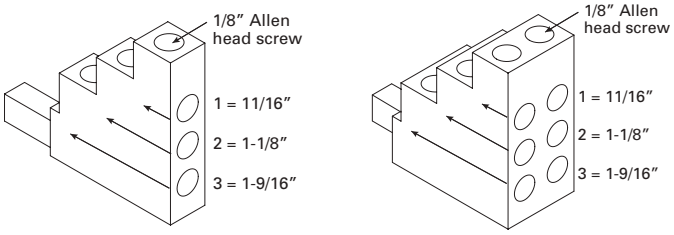


Strip back wire insulation to the lengths as indicated in the illustration above and the table below.

| Lug port | Strip wire insulation back (inch) |
|---|---|
| 1 | 11/16 |
| 2 | 1-1/8 |
| 3 | 1-9/16 |

CCP2-3-30CC/M/10x38 IEC

CCP2R-3-30/60CF

Wiring versatility is provided by single/dual rated box lug terminals on the switch, or by the three-port (for 30 A Class CC, supplemental and 10x38 IEC or 30/60 A CUBEFuse) or six-port (100 A CUBEFuse) multi-wire lug kits that are also single/dual wire rated.

## PLC fuse monitors

### Catalog numbers

- CCP2-PLC-IND (30/60 A switches)
- CCP2-PLC-100 (100 A switches)

### Description

A resettable three-phase fuse monitor that integrates with the I/O card in a Programmable Logic Controller (PLC). A single unit can be mounted on any 1-, 2- or 3-pole 30 and 60 amp CUBEFuse CCP2 switch and the left front/ left side rotary operated switches. A single unit monitors up to three phases. When used on 1- and 2-pole switches unused conductor(s) are removed after installation. The CCP2-PLC-IND **CANNOT** be mounted on the right front/right side rotary operated versions or if a multi-wire lug kit is installed.

### Ratings

- Signal output to PLC*
  - +24 Vdc, 10 mA max
- Output signals
  - Digital 0 Vdc (low), 24 Vdc max (high)
  - 0 Vdc Low – fuse is good
  - 24 Vdc High – fuse has opened

* When the fuse opens, the output signal is sent high and will remain high until the unit is reset.

### Emissions and immunity testing

- IEC 60947-1: Voltage Switchgear and Control Gear
- IEC 61000-6-2: Electromagnetic Compatibility (EMC)
  - IEC 61000-4-2: Electrostatic Discharge Immunity - Test at level 3 (6 kV-Contact Discharge) and level 2 (4 kV-Air Discharge)
  - IEC 61000-4-3: Electromagnetic Compatibility - Radiated, Radio-frequency, Electromagnetic Field Immunity test at level x (20 V/m)
  - IEC 61000-4-4: Electromagnetic Compatibility - Testing and Measurement Techniques at level 3 (± 2kV - Power Port and ±1 kV - I/O Ports)
  - IEC 61000-4-5: Electromagnetic Compatibility - Surge Immunity test at level 4 (±4 kV)
  - IEC 61000-4-6: Immunity to Conducted Disturbances at level 3 (10 V)

| Catalog no. | Switch | Description | Max per CCP2** | Signal output to PLC | Min. circuit volts |
|---|---|---|---|---|---|
| CCP2-PLC-IND | 30/60 A only | Wired remote fuse indication for PLC applications | 1 per CCP2 (1, 2- or 3-pole) | 24 Vdc/ 10 mA | 100 Vac |
| CCP2-PLC-100 | 100 A only | | | | |

**The CCP2-PLC-IND and CCP2-PLC-100 CANNOT be mounted on the right front/ right side rotary operated versions or if a multi-wire lug kit is installed.

De-energize all circuits and follow all prescribed safety procedures before installing or removing the CCP2-PLC-IND or CCP2-PLC-100.

### Agency information

- UL 98 Recognized, Guide WHTY2, File E155130
- cURus to Canadian Standard 22.2 No. 4-04

### Local indication

- Two distinct LEDs indicate unit power (green) and open fuse (red). Open fuse LED is resettable upon fuse replacement and the actuating the reset switch

### Wiring

- For power, signal and ground connections use shielded twisted pair 22-24 AWG (0.34-0.25 $mm^2$) 300 V rated wire

### Packaging

| Catalog no.* | Application | Qty. | Weight lbs (kg) |
|---|---|---|---|
| CCP2-PLC-IND | 30 and 60 A switches only | 1 | 0.17 (0.077) |
| CCP2-PLC-100 | 100 A switches only | | |

* Includes 0.110" (2.8 mm) quick connects for power, signal and ground connections.

### Installation technique

- Mounts on the left side ONLY of the CCP2 and mechanically interlocks with the CCP2 switch handle with hardware provided. The CCP2-PLC-IND and CCP2-PLC-100 **CANNOT** be mounted on the right front/right side rotary operated versions or if a multi-wire lug kit is installed.

### IP20 rating — yes

### Storage and operating temperature

- -20°C to 75°C (-4°F to 167°F)

### PLC programming

- The CCP2-PLC-IND or CCP2-PLC-100 signal line is designed to provide a digital input to a PLC I/O card. In this case, a Programmable Logic Control program must be written to properly interpret the input signal to the PLC. The PLC program should check for consecutive high signals before taking action on a critical process.

### Installed on a CCP2-3-xx

CCP2R-3-30CC/M/10x38 IEC

CCP2R-3-30/60CF

CCP2-PLC-IND mounted on a 3-pole switch and using the fork terminals. When mounted on a 2- or 1-pole switch, remove unused leads.

**Note:** the CCP2-PLC-IND **CANNOT** be mounted on the right front/ right side rotary operated versions or if the multi-wire lug kit is installed.

### PLC wiring schematic

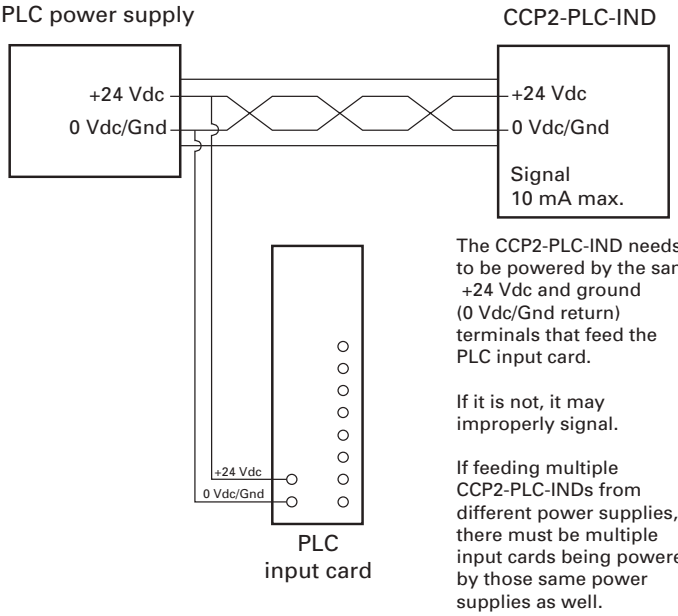


The CCP2-PLC-IND needs to be powered by the same +24 Vdc and ground (0 Vdc/Gnd return) terminals that feed the PLC input card.

If it is not, it may improperly signal.

If feeding multiple CCP2-PLC-INDs from different power supplies, there must be multiple input cards being powered by those same power supplies as well.



### Dimensions — in

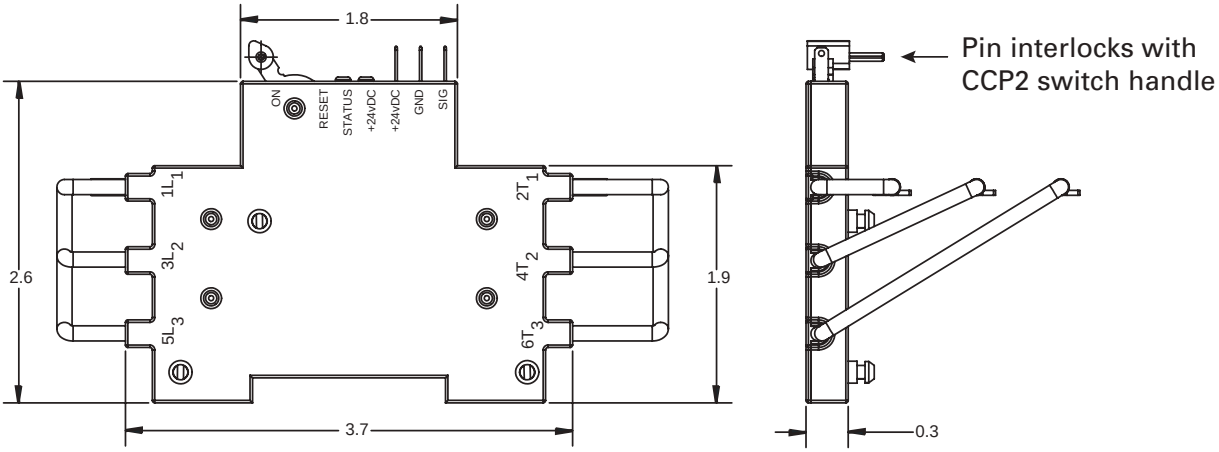


**CCP2-PLC-IND**

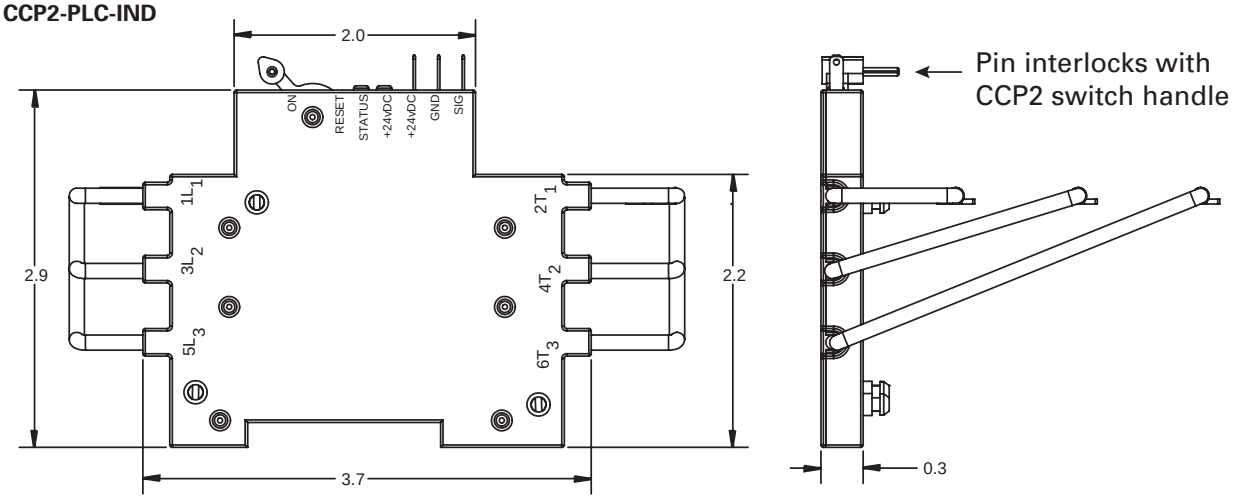


**CCP2-PLC-100**

## Auxiliary contacts

### Catalog numbers

- CCP2-AUX (30 and 60 A switches)
- CCP2-AUX-100 (100 A switches)

### Description

NO+NC contact output to indicate the switching mechanism status on the CCP2. A single unit can be mounted on any 1-, 2- or 3-pole CUBEFuse CCP2 switch and the right front/right side rotary operated switches.

CCP2-3-30CC/M/10x38 IEC

CCP2RL-3-30/60CF

### Installed on a CCP2-3-xx

**Note:** CCP2-AUX and CCP2-AUX-100 **CANNOT** be mounted on the left front and left side rotary operated versions.

### Ratings

- Amps up to 5 A
- Volts up to 240 Vac
- NC/NO contacts are closed/open when the CCP2 switch is in the "ON" position (closed)

| Catalog no. | Switch | Description | Max per CCP2* | Signal output |
|---|---|---|---|---|
| CCP2-AUX | 30/60 A only | Auxiliary contacts NO+NC for switch status | 1 per CCP2 (1-, 2- or 3-pole) | 5 A / 240 Vac |
| CCP2-AUX-100 | 100 A only | | | |

* The CCP2-AUX CANNOT be mounted on the left front and left side rotary operated switches.
De-energize all circuits and follow all prescribed safety procedures before installing or removing the auxiliary contact device.

### Agency information

- UL 98 Recognized, Guide WHTY2, File E155130
- cURus to Canadian Standard 22.2 No. 4-04
- IEC 60947-5-1 AC-15 (catalog no. CCP2-AUX))
- IP20 finger-safe in installed state
- RoHS compliant
- CE

### Wiring

- 16-20 AWG (0.5 to 1.5 mm$^2$) wire
- Torque 0.56 N•m (5 lb-in)
- Use only 75°C Cu wire

### Packaging

- CCP2-AUX and CCP2-AUX-100 are packaged individually

### Installation technique

- Mounts on the CCP2's right side ONLY and mechanically interlocks with the CCP2 switch handle with provided hardware. The CCP2-AUX and CCP2-AUX-100 CANNOT be mounted on the left front and left side rotary operated switches.

### Storage and operating temperature

- -20°C to 75°C (-4°F to 167°F)

### Carton quantity and shipping weight

| Catalog no. | Application | Qty. | Weight lbs (kg) |
|---|---|---|---|
| CCP2-AUX | For 30 and 60 A switches only | 1 | 0.14 (0.063) |
| CCP2-AUX-100 | For 100 A switches only | | |

### Dimensions — in

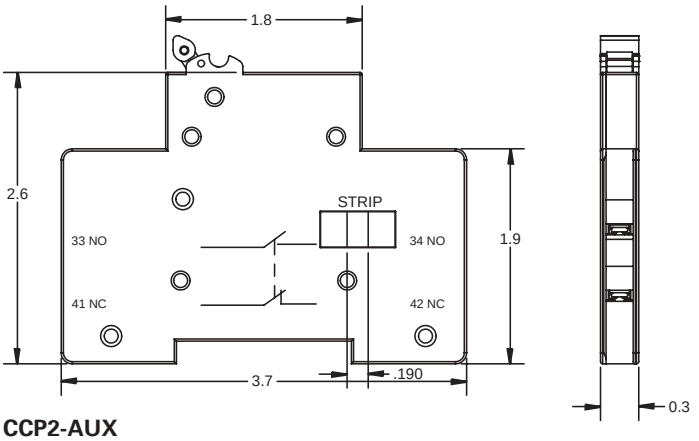


**CCP2-AUX**

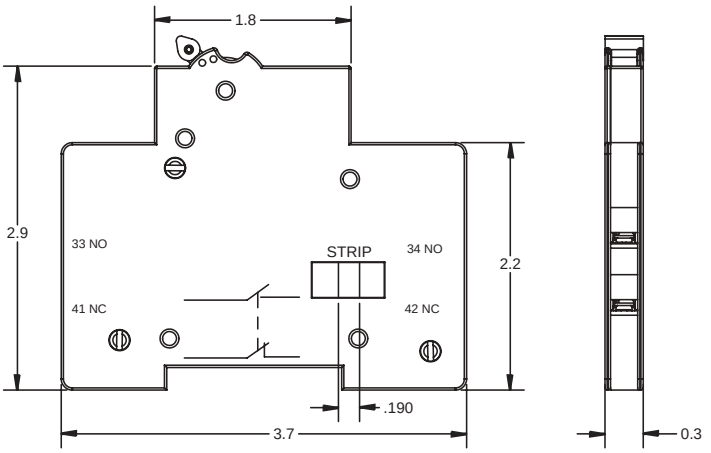


**CCP2-AUX-100**

## Ordering Class CC and UL Supplemental (IEC 10x38) switches

For a complete assembly, select from the following required and optional components, and accessories.

| | | Catalog no. | | |
|---|---|---|---|---|
| | | **Switches** | **Amps** | **Poles** |
| **Required** | | CCP2-1-30CC | 30 | 1 |
| | | CCP2-2-30CC | | 2 |
| | | CCP2-3-30CC | | 3 |
| | | CCP2-1-30M | | 1 |
| | | CCP2-2-30M | | 2 |
| | | CCP2-3-30M | | 3 |
| **And** | | | | |
| **Optional** | | **Lug kits** | **Description** | |
| | | CCP2-MW1-3 | 3-port multi-wire, 75°C Cu/Al, 6-14, includes terminal shrouds, pack of 3 | |
| **And** | | | | |
| **Accessories** | | **Terminal shrouds** | **Description** | |
| | | CCP2-TS1-3 | Pack of 3 | |
| | | **Auxiliary contacts** | **Description** | |
| | | CCP2-AUX | NO + NC, 5 A / 240 V | |
| | | **PLC fuse monitor** | **Description** | |
| | | CCP2-PLC-IND | Signal output 24 Vdc / 10 mA | |

## Ordering Class CC and UL Supplemental (IEC 10x38) clockwise rotary switches

For a complete assembly, select from the following required and optional components, and accessories.

| | | Catalog no. | | |
|---|---|---|---|---|
| | | **Switches** | **Amps** | **Poles** |
| Required | | **Right front rotary** | | |
| | | CCP2R-2-30CC | 30 | 2 |
| | | CCP2R-3-30CC | | 3 |
| | | CCP2R-2-30M | | 2 |
| | | CCP2R-3-30M | | 3 |
| | | **Left front rotary** | | |
| | | CCP2RL-2-30CC | 30 | 2 |
| | | CCP2RL-3-30CC | | 3 |
| | | CCP2RL-2-30M | | 2 |
| | | CCP2RL-3-30M | | 3 |
| | | **Right side rotary** | | |
| | | CCP2S-2-30CC | 30 | 2 |
| | | CCP2S-3-30CC | | 3 |
| | | CCP2S-2-30M | | 2 |
| | | CCP2S-3-30M | | 3 |
| | | **And** | | |
| | | **Rotary handles** | **Description** | **NEMA rating** |
| | | CCP2-H4X-B1 | Selector handle — black/grey | 4X |
| | | CCP2-H4X-R1 | Selector handle — red/yellow | |
| | | CCP2-H4X-B2 | Pistol handle — black/grey | |
| | | CCP2-H4X-R2 | Pistol handle — red/yellow | |
| | | **And** | | |
| | | **Shafts (8 mm)** | **Length** | |
| | | CCP2-SH1-290 | 290 mm | |
| | | CCP2-SH1-490 | 490 mm | |
| **And** | | | | |
| Optional | | **Lug kits** | **Description** | |
| | | CCP2-MW1-3 | 3-port multi-wire, 75°C Cu/Al, 6-14, includes terminal shrouds, pack of 3 | |

| And | | | |
|---|---|---|---|
| Accessories | | **Terminal shrouds** | **Description** |
| | | CCP2-TS1-3 | Pack of 3 |
| | | **Auxiliary contacts** | **Description — cannot be used on right front or right side operated switches** |
| | | CCP2-AUX | NO + NC, 5 A / 240 V |
| | | **PLC fuse monitor** | **Description — Cannot be used on left front operated switches** |
| | | CCP2-PLC-IND | Signal output 24 Vdc / 10 mA |

## Ordering Class CC and UL Supplemental (IEC 10x38) counterclockwise switches

For a complete assembly, select from the following required and optional components, and accessories.

| | | Catalog no. | | |
|---|---|---|---|---|
| | | **Switches** | **Amps** | **Poles** |
| Required | | **Left side rotary** | | |
| | | CCP2SL-2-30CC | 30 | 2 |
| | | CCP2SL-3-30CC | | 3 |
| | | CCP2SL-2-30M | | 2 |
| | | CCP2SL-2-30M | | 2 |
| | | **And** | | |
| | | **Rotary handles** | **Description** | **NEMA rating** |
| | | CCP2-H4X-B1L | Selector handle — black/grey | 4X |
| | | CCP2-H4X-R1L | Selector handle — red/yellow | |
| | | CCP2-H4X-B2L | Pistol handle — black/grey | |
| | | CCP2-H4X-R2L | Pistol handle — red/yellow | |
| | | **And** | | |
| | | **Shafts (8 mm)** | **Length** | |
| | | CCP2-SH1-290 | 290 mm | |
| | | CCP2-SH1-490 | 490 mm | |
| **And** | | | | |
| Optional | | **Lug kits** | **Description** | |
| | | CCP2-MW1-3 | 3-port multi-wire, 75°C Cu/Al, 6-14, includes terminal shrouds, pack of 3 | |
| **And** | | | | |
| Accessories | | **Terminal shrouds** | **Description** | |
| | | CCP2-TS1-3 | Pack of 3 | |
| | | **Auxiliary contacts** | **Description — mounts on right side** | |
| | | CCP2-AUX | NO + NC, 5 A / 240 V | |

## Ordering Class CF CUBEFuse 30 and 60 A CCP2 switches

For a complete assembly, select from the following required and optional components, and accessories.

| | | Catalog no. | | |
|---|---|---|---|---|
| | | **Switches** | **Amps** | **Poles** |
| Required | | CCP2-1-30CF | 30 | 1 |
| | | CCP2-2-30CF | | 2 |
| | | CCP2-3-30CF | | 3 |
| | | CCP2-1-60CF | 60 | 1 |
| | | CCP2-2-60CF | | 2 |
| | | CCP2-3-60CF | | 3 |
| | | **And** | | |
| Optional | | **Lug kits** | **Description** | |
| | | CCP2-MW1-3 | 3-port multi-wire, 75°C Cu/Al, 6-14, includes terminal shields, pack of 3 | |
| | | **And** | | |
| Accessories | | **Terminal shrouds** | **Desscription** | |
| | | CCP2-TS1-3 | Pack of 3 | |
| | | **Auxiliary contacts** | **Description** | |
| | | CCP2-AUX | NO + NC, 5 A / 240 V | |
| | | **PLC fuse monitor** | **Description** | |
| | | CCP2-PLC-IND | Signal output 24 Vdc / 10 mA | |

### Ordering Class CF CUBEFuse 30 and 60 A CCP2 clockwise rotary switches

For a complete assembly, select from the following required and optional components, and accessories.

| | | Catalog no. | | |
|---|---|---|---|---|
| | | **Switches** | **Amps** | **Poles** |
| Required | | **Right front rotary** | | |
| | | CCP2R-2-30CF | 30 | 2 |
| | | CCP2R-3-30CF | | 3 |
| | | CCP2R-2-60CF | 60 | 2 |
| | | CCP2R-3-60CF | | 3 |
| | | **Left front rotary** | | |
| | | CCP2RL-2-30CF | 30 | 2 |
| | | CCP2RL-3-30CF | | 3 |
| | | CCP2RL-2-60CF | 60 | 2 |
| | | CCP2RL-3-60CF | | 3 |
| | | **Right side rotary** | | |
| | | CCP2S-2-30CF | 30 | 2 |
| | | CCP2S-3-30CF | | 3 |
| | | CCP2S-2-60CF | 60 | 2 |
| | | CCP2S-3-60CF | | 3 |
| | | **And** | | |
| | | **Rotary handles** | **Description** | **NEMA rating** |
| | | CCP2-H4X-B1 | Selector handle — black/grey | 4X |
| | | CCP2-H4X-R1 | Selector handle — red/yellow | |
| | | CCP2-H4X-B2 | Pistol handle — black/grey | |
| | | CCP2-H4X-R2 | Pistol handle — red/yellow | |
| | | **And** | | |
| | | **Shafts (8 mm)** | **Length** | |
| | | CCP2-SH1-290 | 290 mm | |
| | | CCP2-SH1-490 | 490 mm | |
| **And** | | | | |
| Optional | | **Lug kits** | **Description** | |
| | | CCP2-MW1-3 | 3-port multi-wire, 75°C Cu/Al, 6-14, includes terminal shields, pack of 3 | |

| And | | | |
|---|---|---|---|
| Accessories | | **Terminal shrouds** | **Desscription** |
| | | CCP2-TS1-3 | Pack of 3 |
| | | **Auxiliary contacts** | **Description — use with CCP2RL-(poles)-30/60CF switches** |
| | | CCP2-AUX | NO + NC, 5 A / 240 V |
| | | **PLC fuse monitor** | **Description — use with CCP2R-(poles)-30/60CF and CCP2S-(poles)-30/60CF switches** |
| | | CCP2-PLC-IND | Signal output 24 Vdc / 10 mA |

### Ordering Class CF CUBEFuse 30 and 60 A CCP2 counterclockwise switches

For a complete assembly, select from the following required and optional components, and accessories.

| | | | | |
|---|---|---|---|---|
| Required | | **Catalog no.** | | |
| | | **Switches** | **Amps** | **Poles** |
| | | **Left side rotary** | | |
| | | CCP2SL-2-30CF | 30 | 2 |
| | | CCP2SL-3-30CF | | 3 |
| | | CCP2SL-2-60CF | 60 | 2 |
| | | CCP2SL-3-60CF | | 3 |
| | | **And** | | |
| | | **Rotary handles** | **Description** | **NEMA rating** |
| | | CCP2-H4X-B1L | Selector handle — black/grey | 4X |
| | | CCP2-H4X-R1L | Selector handle — red/yellow | |
| | | CCP2-H4X-B2L | Pistol handle — black/grey | |
| | | CCP2-H4X-R2L | Pistol handle — red/yellow | |
| | | **And** | | |
| | | **Shafts (8 mm)** | **Length** | |
| | | CCP2-SH1-290 | 290 mm | |
| | | CCP2-SH1-490 | 490 mm | |
| **And** | | | | |
| Optional | | **Lug kits** | **Description** | |
| | | CCP2-MW1-3 | 3-port multi-wire, 75°C Cu/Al, 6-14, includes terminal shields, pack of 3 | |
| **And** | | | | |
| Accessories | | **Terminal shrouds** | **Desscription** | |
| | | CCP2-TS1-3 | Pack of 3 | |
| | | **Auxiliary contacts** | **Description — mounts on right side** | |
| | | CCP2-AUX | NO + NC, 5 A / 240 V | |

## Ordering Class CF CUBEFuse 100 A CCP2 switches

For a complete assembly, select from the following required and optional components, and accessories.

| | | Catalog no. | | |
|---|---|---|---|---|
| | | **Switches** | **Amps** | **Poles** |
| **Required** | | CCP2-1-100CF | 100 | 1 |
| | | CCP2-2-100CF | | 2 |
| | | CCP2-3-100CF | | 3 |
| **And** | | | | |
| **Optional** | | **And** | | |
| | | **Lug kits** | **Description** | |
| | | CCP2-MW1-6 | 6-port multi-wire, 75°C Cu/Al, 6-14, includes terminal shields, pack of 3 | |
| **And** | | | | |
| **Accessories** | | **Terminal shrouds** | **Desscription** | |
| | | CCP2-TS1-6 | Pack of 3 | |
| | | **Auxiliary contacts** | **Description — mounts on right side** | |
| | | CCP2-AUX-100 | NO + NC, 5 A / 240 V | |
| | | **PLC fuse monitor** | **Description — mounts on left side** | |
| | | CCP2-PLC-100 | Signal output 24 Vdc / 10 mA | |

## Ordering Class CF CUBEFuse 100 A CCP2 clockwise rotary switches

For a complete assembly, select from the following required and optional components, and accessories.

| | | Catalog no. | | |
|---|---|---|---|---|
| | | **Switches** | **Amps** | **Poles** |
| Required | | **Right front rotary** | | |
| | | CCP2R-2-100CF | 100 | 2 |
| | | CCP2R-3-100CF | | 3 |
| | | **Left front rotary** | | |
| | | CCP2RL-2-100CF | 100 | 2 |
| | | CCP2RL-3-100CF | | 3 |
| | | **Right side rotary** | | |
| | | CCP2S-2-100CF | 100 | 2 |
| | | CCP2S-3-100CF | | 3 |
| | | **And** | | |
| | | **Rotary handles** | **Description** | **NEMA rating** |
| | | CCP2-H4X-B1 | Selector handle — black/grey | 4X |
| | | CCP2-H4X-R1 | Selector handle — red/yellow | |
| | | CCP2-H4X-B2 | Pistol handle — black/grey | |
| | | CCP2-H4X-R2 | Pistol handle — red/yellow | |
| | | **And** | | |
| | | **Shafts (8 mm)** | **Length** | |
| | | CCP2-SH1-290 | 290 mm | |
| | | CCP2-SH1-490 | 490 mm | |
| **And** | | | | |
| Optional | | **Lug kits** | **Description** | |
| | | CCP2-MW1-6 | 6-port multi-wire, 75°C Cu/Al, 6-14, includes terminal shields, pack of 3 | |

| And | | | |
|---|---|---|---|
| Accessories | | **Terminal shrouds** | **Desscription** |
| | | CCP2-TS1-6 | Pack of 3 |
| | | **Auxiliary contacts** | **Description — use with CCP2RL-(poles)-100CF switches** |
| | | CCP2-AUX-100 | NO + NC, 5 A / 240 V |
| | | **PLC fuse monitor** | **Description — use with CCP2R-(poles)-100CF and CCP2S-(poles)-100CF switches** |
| | | CCP2-PLC-100 | Signal output 24 Vdc / 10 mA |

### Ordering Class CF CUBEFuse 100 A CCP2 counterclockwise switches

For a complete assembly, select from the following required and optional components, and accessories.

| | | | | |
|---|---|---|---|---|
| Required | | **Catalog no.** | | |
| | | **Switches** | **Amps** | **Poles** |
| | | **Left side rotary** | | |
| | | CCP2SL-2-100CF | 100 | 2 |
| | | CCP2SL-3-100CF | | 3 |
| | | **And** | | |
| | | **Rotary handles** | **Description** | **NEMA rating** |
| | | CCP2-H4X-B1L | Selector handle — black/grey | 4X |
| | | CCP2-H4X-R1L | Selector handle — red/yellow | |
| | | CCP2-H4X-B2L | Pistol handle — black/grey | |
| | | CCP2-H4X-R2L | Pistol handle — red/yellow | |
| | | **And** | | |
| | | **Shafts (8 mm)** | **Length** | |
| | | CCP2-SH1-290 | 290 mm | |
| | | CCP2-SH1-490 | 490 mm | |
| **And** | | | | |
| **Optional** | | **Lug kits** | **Description** | |
| | | CCP2-MW1-6 | 6-port multi-wire, 75°C Cu/Al, 6-14, includes terminal shields, pack of 3 | |
| **And** | | | | |
| **Accessories** | | **Terminal shrouds** | **Desscription** | |
| | | CCP2-TS1-6 | Pack of 3 | |
| | | **Auxiliary contacts** | **Description — mounts on right side** | |
| | | CCP2-AUX-100 | NO + NC, 5 A / 240 V | |

## CUBEFuse Compact Circuit Protector Base

RoHS 2011/65/EU

| 1-Pole | 2-Pole | 3-pole |
|---|---|---|
| CCP2B-1-_CF | CCP2B-2-_CF | CCP2B-3-_CF |

### Description

The revolutionary Bussmann series Compact Circuit Protector Base (CCP2B) with CUBEFus™ is a UL 98 horsepower rated fused branch circuit disconnect. Primarily used in the Bussmann series Quik-Spec™ Coordination Panelboard, the CCP2B with CUBEFuse simplifies selective coordination for code complaince along with a lockout/tagout feature for isolating individual branch circuit loads to promote safe work practices.

### Features

- Uses finger-safe, current-limiting Class CF CUBEFuse with Class J performance available, time-delay or fast-acting versions from 1 to 100 amps
- Patented amp rating rejection feature helps prevent overfusing
- High 200 kA short-circuit current rating
- Disconnect rated to provide a means for load isolation
- 2- and 3-pole versions full voltage rated at 600 Vac
- Up to 125 Vdc ratings
- UL 98 Listed for branch circuit disconnect
- 1-, 2- and 3-pole versions are horsepower rated
- Listed to UL and cULus
- Open fuse indication lamp per pole speeds troubleshooting
- Additional open fuse indication can be provided by using the time-delay indicating CUBEFuse in ratings from 6 to 100 A
- Built-in switch/fuse interlock prevents removing or installing a fuse while energized
- Permanent lockout/tagout and lock-on provision usign a 1/4" lock

## Specifications:

### Switch amp ratings and rejection breaks

- 15, 20, 30, 40, 50, 60, 70, 90 and 100 A

### Poles

- 1-, 2- and 3-poles

### Volts

- 600 Vac (or less)
- 125 Vdc*

* Switch amp rating and installed fuse amp rating dependent, see catalog number table for details.

### Agency information

- UL 98 Listed, Guide WHTY, File E302370
- cULus to Canadian Standard 22.2 No. 4, Guide WHTY7, File E302370
- RoHS compliant
- CE

### Lineside bolt-on bus connector and torque

- Bolt-mounted design into Quik-Spec Coordination Panelboard bus
- #10-32 UNC hex flange Phillips screw; 2.8 N•m (25 lb-In)

### Loadside box lug terminal conductor data

- See conductor table for details

### Loadside fork terminal

- Max. 30 A suitable for use with #8-32 UNC screw

### Lockout/tagout

- 1/4" lock

### Local open fuse indication

- Light illumination requires closed circuit and minimum 90 volts

### Carton quantity and shipping weight

| Item | Poles | lbs (kg) |
|---|---|---|
| up to 60 amp switches | 6 | 1.7 (0.77) |
| 70 to 100 amp switches | 6 | 2.6 (1.18) |

### Environmental data

- Storage and operating temperature -20°C to 75°C**

**For fuse performance under or above 25°C, consult fuse performance derating charts.

### Available Bussmann series fuses

| UL fuse class | Type/description | Volts | Data sheet no. |
|---|---|---|---|
| CF | Indicating time-delay, Low-Peak CUBEFuse (6-100 A) | 600 Vac/ 300 Vdc | 9000 |
| | Non-indicating time-delay, Low-Peak CUBEFuse (1-100 A) | | |
| | Non-indicating fast-acting CUBEFuse (1-100 A) | 600 Vac/dc | 2147 |

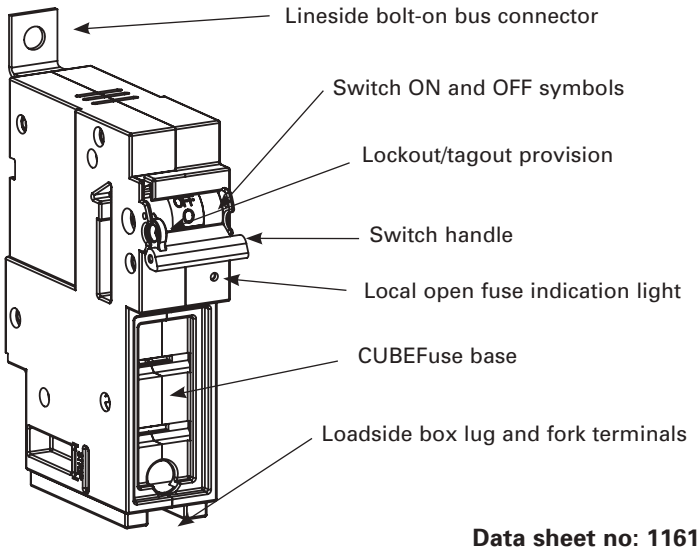


**Data sheet no: 1161**

## Catalog numbers and ratings

| Catalog numbers | Poles | Voltage ratings | Accepts CUBEFuse amp range | Typical installed fuse amp range: Time-delay non-indicating | Typical installed fuse amp range: Time-delay indicating† | Typical installed fuse amp range: Fast-acting non-indicating†† | Max. fuse amp††† | SCCR | Hp ratings (Vac)†††† |
|---|---|---|---|---|---|---|---|---|---|
| CCP2B-1-15CF | 1 | 347 Vac, 125 Vdc | 1 to 15 | TCF1RN, TCF3RN, TCF6RN, TCF10RN, TCF15RN | TCF6, TCF10, TCF15 | FCF1RN, FCF3RN, FCF6RN, FCF10RN, FCF15RN | 15 | 200 kA AC<br>100 kA DC | 0.5 Hp @ 120 V |
| CCP2B-2-15CF | 2 | 600 Vac, 125 Vdc | | | | | | | 1.5 Hp @ 240 V |
| CCP2B-3-15CF | 3 | 600 Vac | | | | | | | 3 Hp @ 240 V<br>5 Hp @ 480 V<br>7.5 Hp @ 600 V |
| CCP2B-1-20CF | 1 | 347 Vac, 125 Vdc | 1 to 20 | TCF17-1/2RN, TCF20RN | TCF17-1/2, TCF20 | FCF20RN | 20 | | 0.75 Hp @ 120 V |
| CCP2B-2-20CF | 2 | 600 Vac, 125 Vdc | | | | | | | 2 Hp @ 240 V |
| CCP2B-3-20CF | 3 | 600 Vac | | | | | | | 3 Hp @ 240 V<br>7.5 Hp @ 480 V<br>10 Hp @ 600 V |
| CCP2B-1-30CF | 1 | 347 Vac, 125 Vdc | 1 to 30 | TCF25RN, TCF30RN | TCF25, TCF30 | FCF25RN, FCF30RN | 30 | | 1.5 Hp @ 120 V |
| CCP2B-2-30CF | 2 | 600 Vac, 125 Vdc | | | | | | | 3 Hp @ 240 V |
| CCP2B-3-30CF | 3 | 600 Vac | | | | | | | 5 Hp @ 240 V<br>15 Hp @ 480 V<br>10 Hp @ 600 V |
| CCP2B-1-40CF | 1 | 347 Vac, 125 Vdc | 1 to 40 | TCF35RN, TCF40RN | TCF35, TCF40 | FCF35RN, FCF40RN | 40 | | 2.0 Hp @ 120 V |
| CCP2B-2-40CF | 2 | 600 Vac, 125 Vdc | | | | | | | 3 Hp @ 240 V |
| CCP2B-3-40CF | 3 | 600 Vac | | | | | | | 7.5 Hp @ 240 V<br>20 Hp @ 480 V<br>10 Hp @ 600 V |
| CCP2B-1-50CF | 1 | 347 Vac, 125 Vdc* | 1 to 50 | TCF45RN, TCF50RN | TCF45, TCF50 | FCF45RN, FCF50RN | 50 | | 3.0 Hp @ 120 V |
| CCP2B-2-50CF | 2 | 600 Vac, 125 Vdc* | | | | | | | 5 Hp @ 240 V |
| CCP2B-3-50CF | 3 | 600 Vac | | | | | | | 7.5 Hp @ 240 V<br>20 Hp @ 480 V<br>10 Hp @ 600 V |
| CCP2B-1-60CF | 1 | 347 Vac, 125 Vdc* | 1 to 60 | TCF60RN | TCF60 | FCF60RN | 60 | | 3.0 Hp @ 120 V |
| CCP2B-2-60CF | 2 | 600 Vac, 125 Vdc* | | | | | | | 7.5 Hp @ 240 V |
| CCP2B-3-60CF | 3 | 600 Vac | | | | | | | 7.5 Hp @ 240 V<br>20 Hp @ 480 V<br>10 Hp @ 600 V |
| CCP2B-1-70CF | 1 | 347 Vac, 125 Vdc | 1 to 70 | TCF70RN | TCF70 | FCF70RN | 70 | | 3.0 Hp @ 120 V |
| CCP2B-2-70CF | 2 | 600 Vac, 125 Vdc | | | | | | | 7.5 Hp @ 240 V |
| CCP2B-3-70CF | 3 | 600 Vac | | | | | | | 15 Hp @ 240 V<br>30 Hp @ 480 V<br>40 Hp @ 600 V |
| CCP2B-1-90CF | 1 | 347 Vac, 125 Vdc** | 1 to 90 | TCF90RN | TCF90 | FCF80RN, FCF90RN | 90 | | 5.0 Hp @ 120 V |
| CCP2B-2-90CF | 2 | 600 Vac, 125 Vdc** | | | | | | | 10 Hp @ 240 V |
| CCP2B-3-90CF | 3 | 600 Vac | | | | | | | 20 Hp @ 240 V<br>50 Hp @ 480 V<br>40 Hp @ 600 V |
| CCP2B-1-100CF | 1 | 347 Vac, 125 Vdc** | 1 to 100 | TCF100RN | TCF100 | FCF100RN | 100 | | 5.0 Hp @ 120 V |
| CCP2B-2-100CF | 2 | 600 Vac, 125 Vdc** | | | | | | | 10 Hp @ 240 V |
| CCP2B-3-100CF | 3 | 600 Vac | | | | | | | 20 Hp @ 240 V<br>50 Hp @ 480 V<br>40 Hp @ 600 V |

† 1 and 3 A indicating CUBEFuse not available. Correct fit with CCP2B disconnect requires indicating CUBEFuse with date code R38 or later.
†† Not for use with motors.
††† Any amp rating less than or equal to the switch max fuse rating may be installed. E.g., TCF15 can be installed in the CCP2B-1-20CF.
†††† Indicating or non-indicating time-delay CUBEFuse only.
* 125 Vdc for installed fuse amp ratings up to 40 A. 24 Vdc for installed fuse amp ratings from 45 to 60 A.
** 125 Vdc for installed fuse amp ratings up to 80 A, 24 Vdc for installed fuse amp ratings from 90 to 100 A.

**Data sheet no: 1161**

### Box lug conductor data

| Wire type | AWG range | Class | Quantity | Torque N•m (lb-in) |
|---|---|---|---|---|
| **15 to 60 A switches** | | | | |
| 75°C Cu | 4-6 | Stranded, Class B to K | Single | 3.95 (35) |
| | 8-18 | | | 2.26 (20) |
| | 6-8 | Stranded, Class B/C | Dual | 3.39 (30) |
| | | Stranded, Class K | | 2.26 (20) |
| | 10-18 | Stranded, Class B to K | | |
| | 10-18 | Solid | Single/dual | 2.26 (20) |
| | 4-18 | Stranded, UL ferrule, Class B/C | Single | 3.39 (30) |
| | 6-18 | | Twin† | |
| | 4-18 | Stranded, UL ferrule, Class K | Single | 2.82 (25) |
| | 6-18 | | Twin† | |
| **70 to 100 A switches** | | | | |
| 75°C Cu | 12-18 | Stranded, Class B to K | Single | 2.26 (20) |
| | 10 | | | 2.82 (25) |
| | 8 | | | 4.52 (40 |
| | 4-6 | | | 5.08 (45) |
| | 1-3 | | | 6.21 (55) |
| | 3-12 | Stranded, Class B to K | Dual | 3.95 (35) |
| | 12-18 | Stranded, UL ferrule, Class B/C | Single | 2.26 (20) |
| | 10 | | | 3.95 (35) |
| | 1-8 | | | 4.52 (40) |
| | 10-18 | | Twin† | 2.26 (20) |
| | 6-8 | | | 2.82 (25) |
| | 10-18 | Solid | Single | 2.26 (20) |
| | 10-18 | | Dual | 2.26 (20) |
| | 8-18 | Class K | Single | 2.26 (20) |
| | 1-6 | | | 3.39 (30) |
| | 3-10 | | Dual | 5.08 (45) |
| | 8-18 | Class K, UL ferrule | Single | 2.26 (20) |
| | 1-6 | | | 3.39 (30) |
| | 6-18 | | Twin | 2.26 (20) |

† Two stranded conductors placed in one UL Listed twin ferrule.

## Dimensions — in (mm)

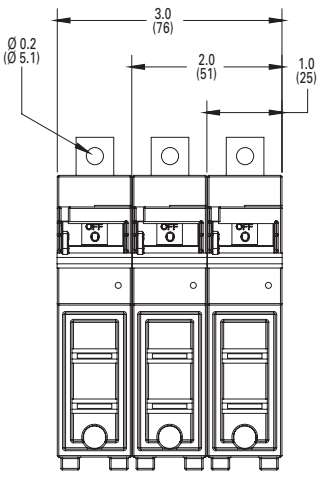


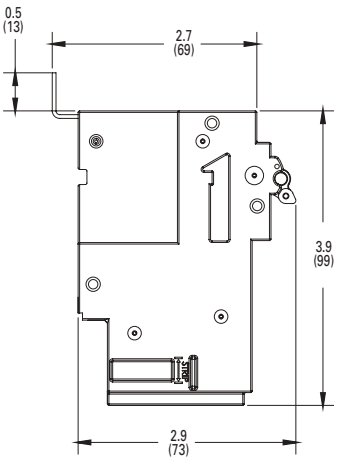


**15-60 A**

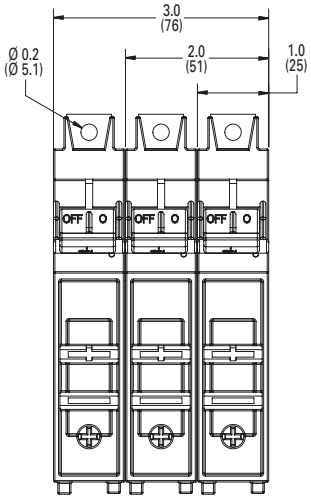


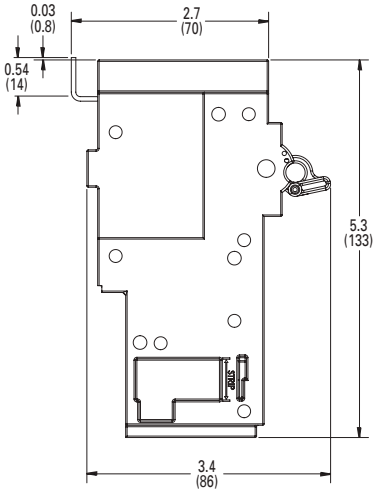


**70-100 A**

For details on the CCP2B and its use in the Quik-Spec Coordination Panelboard, see data sheet no. 1160.

**Data sheet no: 1161**

## CCPLP UL 98 Listed low profile Compact Circuit Protector

RoHS 2011/65/EU

The revolutionary Bussmann series low profile Compact Circuit Protector (CCPLP) is a UL 98/508 Listed fused disconnect switch. This front panel mount switch is available in 1-, 2- and 3-pole versions, and has the smallest footprint of any fused disconnect switch. It features an SCCR up to 200 kA to help improve equipment SCCR.

### Four fuse types

The CCPLP is available for UL Class CC and G, UL supplemental (13/32" x 1-1/2") and IEC 10x38 mm fuses.

Class CC and G versions are easily selectively coordinated with the upstream Bussmann series CUBEFuse™ using published fuse ampacity ratio tables.

### Design/application flexibility

The CCPLP is easily integrated into many panel designs and provides a high SCCR alternative to low profile circuit breakers on the market.

### Ratings

- Volts
  - 600 Vac (Class CC up to 30 A, Class G 20 A)
  - 550 Vac (10x38mm IEC Class aM 0.16-16 A)
  - 500 Vac (10x38mm IEC Class gG 0.5-25 A)
  - 400 Vac (10x38mm IEC Class aM 20-32 A, gG 32 A)
  - 240 Vac (13/32" x 1-1/2" UL supplemental 30 A)
- Amps
  - Up to 30 A (UL)
  - Up to 32 A (IEC)
- SCCR
  - 200 kA (Class CC)
  - 120 kA (10x38mm IEC Class gG and aM)
  - 100 kA (Class G)
  - 10 kA (13/32" x 1-1/2" UL supplemental)
- Frequency 50/60 Hz
- Impulse voltage 8 kV

### Terminals and conductors 75°C/90°C Cu

- Screw terminal, 10-32 phil-slot screw with external tooth lock washer (use with properly rated/UL Listed ring or fork terminal)
- Pressure plate terminal, 10-32 phil-slot screw (single 22-6 AWG solid or stranded)

### Ambient storage and operating temperature

- -20 to 90°C, 85% relative humidity, non-condensing

### Poles

1-, 2- and 3-pole factory configured*

* 2- and 3-pole versions supplied as ganged switches with phase barriers.

### Agency information

- Class G fuse versions
  - UL 98 Listed, Guide WHTY, File E302370
  - IEC 60947-3 AC-23A
- Class CC fuse versions
  - UL 98 Listed, Guide WHTY, File E302370
  - cULus to Canadian Standard 22.2 No. 4-04, Guide WHTY7, File E302370
  - IEC 60947-3 AC-23A
- UL supplemental and IEC 10x38mm fuse versions
  - UL 508 Listed, Guide NRNT, File E320230
  - cULus Listed to Canadian Standard 22.2 No. 14-05, Guide NRNT7, File E320230
  - IEC 60947-3 AC-23A
- RoHS compliant
- CE

### Safety

- Finger-safe IP20 from panel front

### Mounting

- Front panel mounting with customer supplied M3 screws

### Open fuse indication*

- Local open fuse indication provided for each pole by an orange neon lamp (minimum 90 V)

* Open fuse indication requires an energized, closed circuit with an open fuse in the CCPLP and the switch in the ON position.

### Lockout/tagout provision

- Brady pin-out device, part number 90844

### Circuit labeling provision

- Accepts up to two universal marker labels, catalog number TM26CB

### Carton quantity

- 12 poles (1-pole: 12 units, 2-pole: 6 units, 3-pole: 4 units)

### Minimum enclosure size

- 6" x 6" x 4" per UL 98 Listing

**Data sheet no.10372**

## Available CCPLP versions

| Catalog no. | | | | | SCCR | Horsepower (Vac) | | | |
|---|---|---|---|---|---|---|---|---|---|
| Screw terminal | Pressure plate terminal | Poles | Volts AC | Amps | (kA) | 120 | 240 | 480 | 600 |
| **UL Class G fuse** | | | | | | | | | |
| CCPLP-1-20G-S | CCPLP-1-20G-P | 1 | | | | — | — | — | — |
| CCPLP-2-20G-S | CCPLP-2-20G-P | 2 | 600 | 20 | 100 | — | — | — | — |
| CCPLP-3-20G-S | CCPLP-3-20G-P | 3 | | | | — | — | — | — |
| **UL Class CC fuses** | | | | | | | | | |
| CCPLP-1-30CC-S | CCPLP-1-30CC-P | 1 | | | | 0.5 | — | — | — |
| CCPLP-2-30CC-S | CCPLP-2-30CC-P | 2 | 600 | 30 | 200 | — | 2 | — | — |
| CCPLP-3-30CC-S | CCPLP-3-30CC-P | 3 | | | | — | 3 | 4 | 7. 5 |
| **UL 13/32"x1-1/2" midget fuses** | | | | | | | | | |
| CCPLP-1-30M-S | CCPLP-1-30M-P | 1 | | | | — | — | — | — |
| CCPLP-2-30M-S | CCPLP-2-30M-P | 2 | 240 | 30 | 10 | — | — | — | — |
| CCPLP-3-30M-S | CCPLP-3-30M-P | 3 | | | | — | — | — | — |
| **IEC 10x38 gG and aM fuses** | | | | | | | | | |
| CCPLP-1-30M-S | CCPLP-1-30M-P | 1 | gG fuses: up to 25 A @ 500 V 32 A @ 400 V | | 120 | — | — | — | — |
| CCPLP-2-30M-S | CCPLP-2-30M-P | 2 | aM fuses: up to 16 A @ 550 A 20-23 A @ 400V | | 120 | — | — | — | — |
| CCPLP-3-30M-S | CCPLP-3-30M-P | 3 | | | 120 | — | — | — | — |

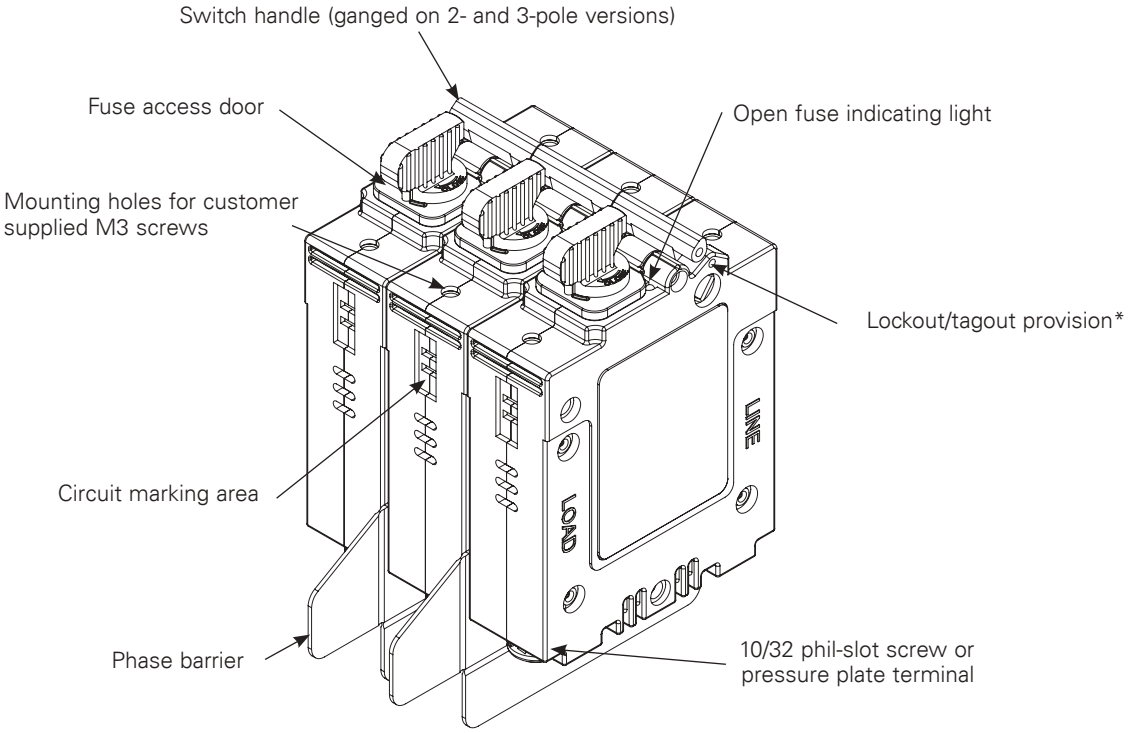


* Use Brady pin-out device, P/N 90844

## Available Bussmann series fuses

| Fuse class | Catalog symbol |
|---|---|
| CC | FNQ-R, KTK-R, LP-CC |
| G | SC |
| M | BAF, FNM, FNQ, KLM, KTK |
| gG | C10G |
| aM | C10M |

Data sheet no.10372

## UL 98 fused disconnect switches up to 800 A

Bussmann series UL 98 and UL 489 fused disconnect switches "break" and "make" power circuits ON and OFF load.

The switches employ double break contacts per pole that help ensure complete isolation of the fuse when the switch is in the "OFF" position.

### Agency information

- UL 98, Guide WHTY, File E155130
- UL 489, Guide WJAZ, File E359801
- CSA 22.2 No. 4, File 257020
- Conforms with IEC 60947-3
- NFPA 79

### Features

- Make and break power under load
- Double break by pole
- 30-60 A DIN-Rail or panel mount, 100-800 A panel mount only
- Up to 200 kA short-circuit current rating
- Finger-safe covers
- Compact footprints available
- Defeatable handles automatically re-latch when the panel door is closed
- Most disconnect switches are front, right side, flange or direct handle operable
- NFPA 79 compliant handle kits

### Online resources available at Eaton.com/bussmannseries

- CAD drawings
- Instruction sheets
- UL information

### Available Bussmann series fuses

| Fuse class | Catalog symbol/type |
|---|---|
| CC | LP-CC time-delay, current limiting |
| | FNQ-R time-delay |
| | KTK-R fast-acting |
| J | LPJ time-delay, current limiting |
| | JKS fast-acting fuses |
| | DFJ high speed drive fuse |
| L | KRP-C time-delay, current limiting |
| | KTU fast-acting |
| | KLU time-delay |
| | KRP-CL (225-600 A) |

## UL 98 fused disconnect switches — 30 to 800 A

RDF30CC-3

RDF30J-3 / RDF60J-3-COMP

RDF60J-3

RDF200J-3

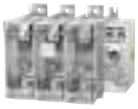
RDF600J-3

| Poles | | Catalog no. | | | | | | | | | |
|---|---|---|---|---|---|---|---|---|---|---|---|
| **2-pole** | | **—** | **—** | **RDF30J-2** | **RDF60J-2-COMP** | **RDF60J-2** | **RDF100J-2** | **RDF200J-2** | **RDF400J-2** | **RDF600J-2** | **RDF800L-2** |
| **3-pole** | | **RDF30CC-3** | **RDF30J-3-COMP** | **RDF30J-3** | **RDF60J-3-COMP** | **RDF60J-3** | **RDF100J-3** | **RDF200J-3** | **RDF400J-3** | **RDF600J-3** | **RDF800L-3** |
| **3-pole + neutral** | | **RDF30CC-3N** | **RDF30J-3N-COMP** | **—** | **—** | **—** | **—** | **—** | **—** | **—** | **—** |
| **4-pole** | | **—** | **—** | **RDF30J-4** | **RDF60J-4-COMP** | **RDF60J-4** | **RDF100J-4** | **RDF200J-4** | **RDF400J-4** | **RDF600J-4** | **RDF800L-4** |
| UL standard | | UL 489 | UL 489 | UL 98 | UL 98 | UL 98 | UL 98 | UL 98 | UL 98 | UL 98 | UL 98 |
| Fuse class | | CC | J | J | J | J | J | J | J | J | L |
| Max fuse/ampacity | | 30 | 30 | 30 | 60 | 60 | 100 | 200 | 400 | 600 | 800 |
| Switch type | | Compact | Compact | Standard | Compact | Standard | Standard | Standard | Standard | Standard | Standard |
| Handle operation | | Front | Front | Front/Side | Front/Side | Front/Side | Front/Side , Flange | Front/Side , Flange | Front/Side , Flange | Front , Flange | Front , Flange |
| UL electrical ratings | | | | | | | | | | | |
| Max AC volts | | 600 Vac | 600 Vac | 600 Vac | 600 Vac | 600 Vac | 600 Vac | 600 Vac | 600 Vac | 600 Vac | 600 Vac |
| Max DC volts* | | — | — | 250 Vdc | 250 Vdc | 250 Vdc | 250 Vdc | — | 250 Vdc | 600 Vdc | 600 Vdc |
| Std. AC Hp ratings | 1-phase, 240 | — | — | 3 | 10 | 10 | 10 | 10 | 10 | — | — |
| | 3-phase, 240 | 3 | 3 | 3 | 7.5 | 7.5 | 15 | 25 | 50 | 75 | 75 |
| | 3-phase, 480 | 5.0 | 5.0 | 5.0 | 15 | 15 | 25 | 50 | 100 | 150 | 200 |
| | 3-phase, 600 | 7.5 | 7.5 | 7.5 | 15 | 15 | 30 | 60 | 125 | 200 | 250 |
| Max. AC Hp ratings | 3-phase, 240 | 7.5 | 7.5 | 7.5 | 15 | 15 | 30 | 60 | 125 | 200 | 200 |
| | 3-phase, 480 | 15 | 15 | 15 | 30 | 30 | 60 | 125 | 250 | 400 | 500 |
| | 3-phase, 600 | 20 | 20 | 20 | 50 | 50 | 75 | 150 | 350 | 500 | 500 |
| DC Hp ratings | 125 Vdc | — | — | 3 | 5 | 5 | 7.5 | — | 20 | — | — |
| | 250 Vdc | — | — | 5 | 10 | 10 | 20 | — | 50 | — | — |
| Electrical characteristics | | | | | | | | | | | |
| SCCR | | 100 kA | 100 kA | 200 kA | 100 kA | 200 kA | 200 kA | 200 kA | 200 kA | 200 kA | 200 kA |
| Terminal lugs/kits | | Integral | Integral | Integral | Integral | Integral | Integral | • | • | • | • |
| Mounting torque - lb-in (N•m) | | — | — | — | — | — | — | 160 (18) | 310 (35) | 310 (35) | 310 (35) |
| Wire type | | 75°C Cu | 75°C Cu | 75°C Cu | 75°C Cu | 75°C Cu | 75°C Cu | 75°C Cu/ Al | 75°C Cu/ Al | 75°C Cu/ Al | 75°C Cu/ Al |
| Wire range, torque - lb-in (N•m) | Solid | 14-10, 27 (3.1) | 14-10, 27 (3.1) | 14-10, 31 (3.5) | 14-10, 31 (3.5) | 12-10, 35.4 (4) | 12-10, 35.4 (4) | — | — | — | — |
| | Stranded | 14-10 27 (3.1) | 14-10 27 (3.1) | 14-6 , 31 (3.5) | 14-6, 31 (3.5) | 12-1, 35.4 (4) | 12-1, 35.4 (4) | 6-300 kcmil, 275 (31) | 4-600 kcmil, 550 (62), Dual 1/0-250 kcmil 550 (62) | (2) 2-600 kcmil, 375 (42.4) | (2) 2-600 kcmil, 375 (42.4) |
| Mechanical characteristics | | | | | | | | | | | |
| Endurances/cycles | | 10,000 | 10,000 | 10,000 | 10,000 | 10,000 | 10,000 | 8000 | 6000 | 5000 | 5000 |
| Physical characteristics | | | | | | | | | | | |
| Dimensions | | See drawings on product pages | | | | | | | | | |
| Weight - lbs (kg) | 2-pole | — | — | 3.0 (1.3) | 3.1 (1.4) | 4.1 (1.8) | 4.1 (1.8) | 5.7 (2.6) | 11.4 (5.2) | 31.7 (14.4) | 31.7 (14.4) |
| | 3-pole | 1.3 (0.6) | 1.4 (0.6) | 3.8 (1.7) | 4.1 (1.8) | 5.3 (2.4) | 5.3 (2.4) | 7.8 (3.5) | 16.6 (7.6) | 44.2 (20.1) | 44.2 (20.1) |
| | 3-pole + neutral | 1.4 (0.6) | 1.5 (0.7) | — | — | — | — | — | — | — | — |
| | 4-pole | — | — | 4.7 (2.1) | 4.8 (2.2) | 6.49 (2.9) | 6.49 (2.9) | 10.8 (4.9) | 21.8 (9.9) | 56.8 (25.8) | 56.8 (25.8) |
| Environmental | | | | | | | | | | | |
| Operating temp. range | | -20-70°C | -20-70°C | -20-70°C | -20-70°C | -20-70°C | -20-70°C | -20-70°C | -20-70°C | -20-70°C | -20-70°C |
| Flammability rating | | UL 94-V0 | UL 94-V0 | UL 94-V0 | UL 94-V0 | UL 94-V0 | UL 94-V0 | UL 94-V0 | UL 94-V0 | UL 94-V0 | UL 94-V0 |
| Accessories | | | | | | | | | | | |
| Lug Kit | | Integral | Integral | Integral | Integral | Integral | Integral | • | • | • | • |
| Handles | Direct | • | • | • | • | • | • | • | • | • | • |
| | Front selector | • | • | — | — | — | — | — | — | — | — |
| | Front pistol | • | • | • | • | • | • | • | • | • | • |
| | Side pistol | — | — | • | • | • | • | • | • | — | — |
| Flange | Cable | — | — | • | • | • | • | • | — | — | — |
| | Shaft | — | — | • | • | • | • | • | — | — | — |
| NFPA through door handle | | • | • | • | • | • | • | • | • | • | • |
| Shafts c/s - mm | | 5x5 | 5x5 | 10x10 | 10x10 | 10x10 | 10x10 | 10x10 | 10x10 | 12X12 | 12X12 |
| Terminal shrouds | | Not Required | Not Required | Not Required | Not Required | Not Required | Not Required | • | • | • | • |
| Auxiliary contacts | (1) NO | • | • | • | • | • | • | • | • | • | • |
| | (1) NC | • | • | • | • | • | • | • | • | • | • |
| AC ratings | Volts | 600 | 600 | 600 | 600 | 600 | 600 | 600 | 600 | 600 | 600 |
| | Amps | 10 | 10 | 10 | 10 | 10 | 10 | 10 | 10 | 10 | 10 |

• Available, see product page for details and catalog numbers.
— Not available.
* General purpose only, not photovoltaic rated.

## UL 98 fused rotary disconnect switches — 30 A

### Standard 30 amp Class CC and compact 30 amp Class J

For a complete assembly, select:

**Select for standard applications**

**Switch**

**Switch**

| Amps | Fuse class | Poles | SCCR (kA) | Max Hp rating, 3-phase 220/240 | 440/480 | 600 | Conductor AWG size /type | Catalog no. |
|---|---|---|---|---|---|---|---|---|
| 30 | CC | 3 | 100 | 7.5 | 15 | 20 | 14-10 Sol/Str 75°C Cu | RDF30CC-3 |
| 30 | | 3 + Ntrl.* | 100 | 7.5 | 15 | 20 | | RDF30CC-3N |
| 30 | J | 3 | 100 | 7.5 | 15 | 20 | | RDF30J-3-COMP |
| 30 | | 3 + Ntrl.* | 100 | 7.5 | 15 | 20 | | RDF30J-3N-COMP |

* Neutral is switched.

**Plus**

**Handle**

**Direct mount handle - mounts directly to switch, no shaft required**

| For switch cat. no. | Color | Test function | Padlockable | Catalog no. |
|---|---|---|---|---|
| RDF30CC-_ | Black | Y | Y | DIR-05 |
| RDF30J-_-COMP | | | | DIR-06 |

**OR**

+

**External front operated selector handle - shaft required**

| NEMA type | Color | Test function | Padlockable | Defeatable | Catalog no. |
|---|---|---|---|---|---|
| 1, 3R, 4, 4X, 12 | Black | N | Y | Y | H4X-04B |
| 1, 3R, 4, 4X, 12 | Red/yellow | | | | H4X-04R |

**Shafts for selector handles**

| Length - in (mm) | Mounting depth (X) - in (mm) | Catalog no. |
|---|---|---|
| 7.9 (200) | 4.02~9.65 (102~245) | SH1-200 |
| 12.6 (320) | 4.02~14.37 (102~365) | SH1-320 |
| 15.7 (400) | 4.02~17.52 (102~445) | SH1-400 |

**OR**

or

+

**External front operated pistol handles - shaft required**

| NEMA type | Color | Test function | Padlockable | Defeatable | Catalog no. |
|---|---|---|---|---|---|
| 1, 3R, 12 | Black | N | Y | Y | H12-05B |
| 1, 3R, 12 | Red/yellow | | | | H12-05R |
| 1, 3R, 4, 4X, 12 | Black | | | | H4X-05B |
| 1, 3R, 4, 4X, 12 | Red/yellow | | | | H4X-05R |
| 1, 3R, 4, 4X, 12 | Black | Y | | | H4X-05TB |
| 1, 3R, 4, 4X, 12 | Red/yellow | | | | H4X-05TR |

**Metallic hasp (heavy duty) external front operated pistol handles - shaft required**

| NEMA type | Color | Test function | Padlockable | Defeatable | Catalog no. |
|---|---|---|---|---|---|
| 1, 3R, 4, 4X, 12 | Black | N | Y | Y | H4X-05BHD |
| 1, 3R, 4, 4X, 12 | Red/yellow | | | | H4X-05RHD |

**Shafts for pistol handles**

| Length - in (mm) | Mounting depth (X) - in (mm) | Catalog no. |
|---|---|---|
| 7.9 (200) | 4.02~9.65 (102~245) | SH2-200 |
| 12.6 (320) | 4.02~14.37 (102~365) | SH2-320 |
| 15.7 (400) | 4.02~17.52 (102~445) | SH2-400 |

**OR**

**NFPA through the door handle kit - to be used with front pistol handle**

| Color | Test function | Padlockable | Defeatable | Catalog no. |
|---|---|---|---|---|
| Red | N | Y | N | H79-1 |

**AND...**

**Accessories**

**Auxiliary contacts**

1 2

**Auxiliary contacts**

| Contact type | No. of contacts | Continuous amp rating | Voltage (Vac) | Maximum number of auxiliary contacts per disconnect switch catalog number | Catalog no. |
|---|---|---|---|---|---|
| NO | 1 | 10 | 600 | RDF30CC-_: 4 / 8 with BAC-HOLDER2 BAC05 (1) RDF30J-_-COMP: 2 /6 with BAC-HOLDER2 | BAC05 (1) |
| NC | | | | | BAC06 (1) |
| Auxiliary contact holder | | | | Accepts 4 Auxiliary contacts: BAC05 or BAC06 | BAC-HOLDER2 (2) |

**Dimensions — in (mm)**

RDF30CC-_

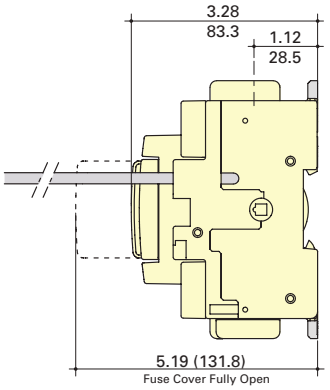


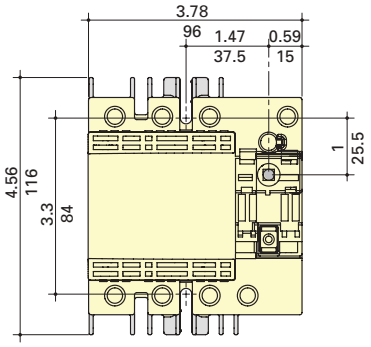


RDF30J-_-COMP

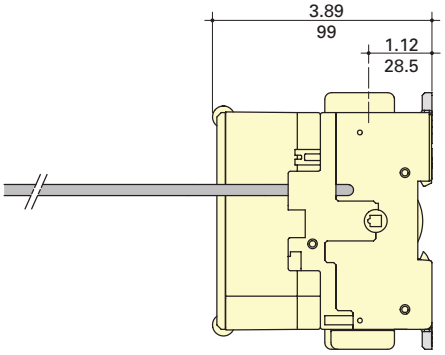


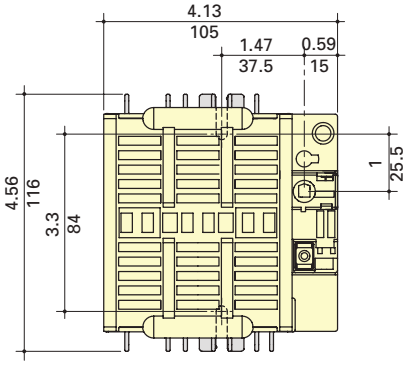


External front selector handle

Selector handle type

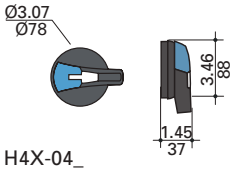


Direction of front operation

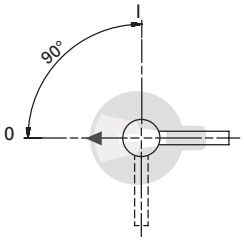


Door drilling layout

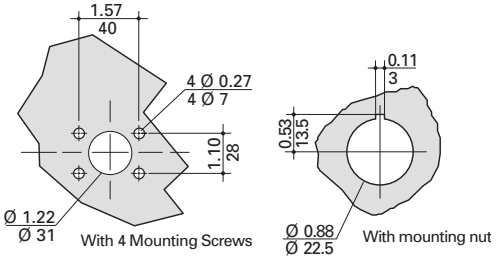


External front pistol handles

Pistol handle type

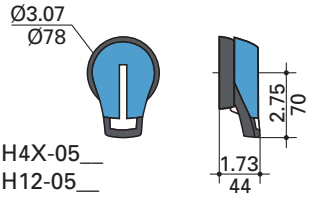


Direction of front operation

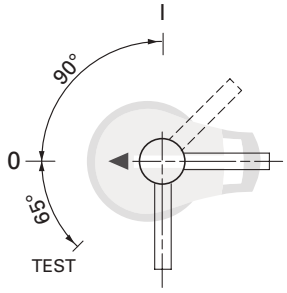


Door drilling layout

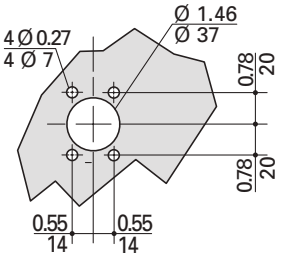

## Standard 30 amp Class J

### For a complete assembly, select:

Select for standard applications

**Switch**

| Amps | Fuse class | Poles | SCCR (kA) | Max horsepower rating 1-phase 220/240 | 1-phase 220/240 | 3-phase 440/480 | 3-phase 600 | DC* 125 | DC* 250 | Conductors AWG size / type | Catalog no. |
|---|---|---|---|---|---|---|---|---|---|---|---|
| 30 | J | 2 | 200 | 3 | - | - | - | 3 | 5 | 14-10 Sol/14-6 Str 75°C Cu | RDF30J-2 |
| | | 3 | | - | 7.5 | 15 | 20 | 3 | 5 | | RDF30J-3 |
| | | 4 | | - | 7.5 | 15 | 20 | 3 | 5 | | RDF30J-4 |

* DC ratings use two poles in series.

**PLUS**

**Handle**

**Direct mount handle - mounts directly to switch, no shaft required**

| For switch cat. no. | Color | Test function | Padlockable | Catalog no. |
|---|---|---|---|---|
| All switches | Black | Y | Y - On switch | DIR-07 |

**OR**

**External front operated pistol handles - shaft required**

| NEMA type | Color | Test function | Padlockable | Defeatable | Catalog no. |
|---|---|---|---|---|---|
| 1, 3R, 12 | Black | N | Y | Y | H12-05B |
| | Red/yellow | | | | H12-05R |
| 1, 3R, 4, 4X, 12 | Black | | | | H4X-05B |
| | Red/yellow | | | | H4X-05R |
| | Black | Y | | | H4X-05TB |
| | Red/yellow | | | | H4X-05TR |

Or

**Metallic hasp (heavy duty) external front operated pistol handles - shaft required**

| NEMA type | Color | Test function | Padlockable | Defeatable | Catalog no. |
|---|---|---|---|---|---|
| 1, 3R, 4, 4X, 12 | Black | N | Y | Y | H4X-05BHD |
| | Red/yellow | | | | H4X-05RHD |

**External right side operated pistol handles - shaft required**

| NEMA type | Color | Test function | Padlockable | Defeatable | Catalog no. |
|---|---|---|---|---|---|
| 1, 3R, 4, 4X, 12 | Black | N | Y | N/A | H4X-05SB |
| | Red/yellow | | | | H4X-05SR |

+

**Shafts for pistol handles**

| Length — in (mm) | Mounting depth (X) — in (mm) | Catalog no. |
|---|---|---|
| 7.9 (200) | 5.30~9.06 (135~230) | SH5-200 |
| 12.6 (320) | 5.30~13.78 (135~350) | SH5-320 |
| 15.7 (400) | 5.30~16.93 (135~430) | SH5-400 |

**OR**

**Flange handle (1) - requires shaft operated mechanism or cable operated mechanism + cable**

| NEMA type | Flange style | Test function | Padlockable | Defeatable | Catalog no. |
|---|---|---|---|---|---|
| 1, 3R, 4, 12 | Standard | N | Y | Y | FLH1 |
| 1, 3R, 4, 4X, 12 | Chrome plated | | | | FLH2 |

**Shaft operated flange mechanism (2) - includes shaft**

| For enclosure depth - in (mm) | Catalog no. |
|---|---|
| 6~24 (152~613) | FLRM |

**Cable operated flange mechanism and cable - must select mechanism (3) and cable (4)**

| Item / length — in (mm) | Catalog no. |
|---|---|
| Cable mechanism | FLCM |
| 36 (900) cable | FLC36 |
| 60 (1500) cable | FLC60 |
| 120 (3000) cable | FLC120 |

**OR**

**NFPA through the door handle kit - to be used with front pistol handle**

| Color | Test function | Padlockable | Defeatable | Catalog no. |
|---|---|---|---|---|
| Red | N | Y | N | H79-2 |

**AND...**

Accessories

**Aux. contacts**

**Auxiliary contacts**

| Contact type | No. of contacts | Continuous amp rating | Voltage (Vac) | Max. aux contacts per switch | Catalog no. |
|---|---|---|---|---|---|
| NO | 1 | 10 | 600 | 4 | BAC05 |
| NC | | | | | BAC06 |

**Dimensions — in (mm)**

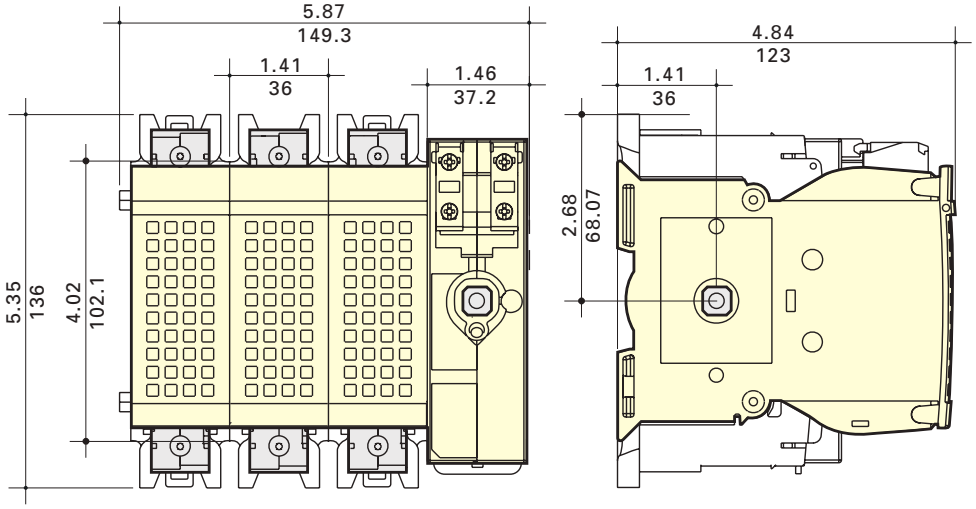


Direct mount handle

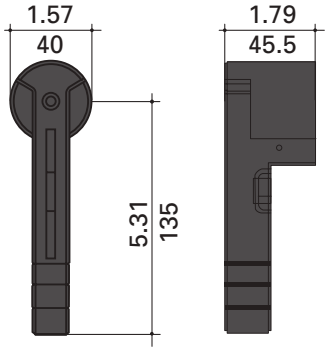


DIR-07

Flange handle

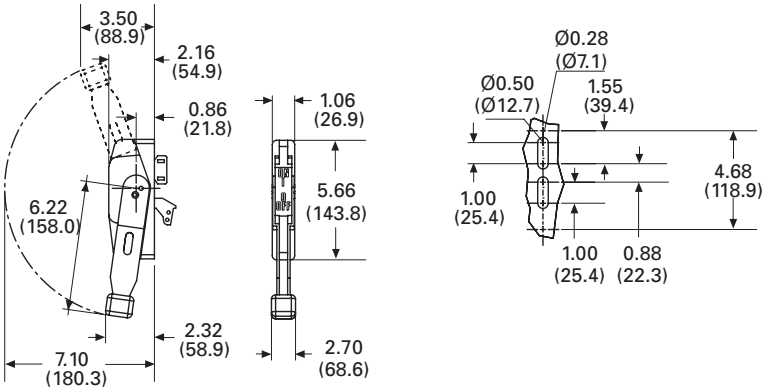


FLH_

External front and right side pistol handle

Handle type | Direction of front operation | Direction of right side operation | Door drilling layout

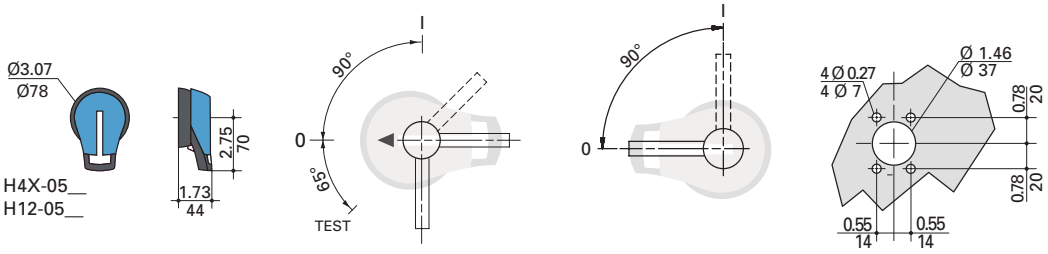

## Compact 60 amp Class J

**For a complete assembly, select:**

Select for standard applications

### Switch

**Switch**

| Amps | Fuse class | Poles | SCCR (kA) | Max horsepower rating: 1-phase 220/240 | 3-phase 220/240 | 3-phase 440/480 | 3-phase 600 | DC* 125 | DC* 250 | Conductor AWG size / type | Catalog no. |
|---|---|---|---|---|---|---|---|---|---|---|---|
| 60 | J | 2 | 100 | 10 | - | - | - | 5 | 10 | 14-10 Sol/14-6 Str 75°C Cu | RDF60J-2-COMP |
| | | 3 | | - | 15 | 30 | 50 | 5 | 10 | | RDF60J-3-COMP |
| | | 4 | | - | 15 | 30 | 50 | 5 | 10 | | RDF60J-4-COMP |

* DC ratings use two poles in series.

**PLUS**

### Handle

**Direct mount handle - mounts directly to switch, no shaft required**

| For switch cat. no. | Color | Test function | Padlockable | Catalog no. |
|---|---|---|---|---|
| All switches | Black | Y | Y - on switch | DIR-07 |

**OR**

**External front operated pistol handles - shaft required**

| NEMA type | Color | Test function | Padlockable | Defeatable | Catalog no. |
|---|---|---|---|---|---|
| 1, 3R, 12 | Black | N | Y | Y | H12-05B |
| 1, 3R, 12 | Red/yellow | | | | H12-05R |
| 1, 3R, 4, 4X, 12 | Black | | | | H4X-05B |
| 1, 3R, 4, 4X, 12 | Red/yellow | | | | H4X-05R |
| 1, 3R, 4, 4X, 12 | Black | Y | | | H4X-05TB |
| 1, 3R, 4, 4X, 12 | Red/yellow | | | | H4X-05TR |

**Or**

**Metallic hasp (heavy duty) external front operated pistol handles - shaft required**

| NEMA type | Color | Test function | Padlockable | Defeatable | Catalog no. |
|---|---|---|---|---|---|
| 1, 3R, 4, 4X, 12 | Black | N | Y | Y | H4X-05BHD |
| 1, 3R, 4, 4X, 12 | Red/yellow | | | | H4X-05RHD |

**External right side operated pistol handles - shaft required**

| NEMA type | Color | Test function | Padlockable | Defeatable | Catalog no. |
|---|---|---|---|---|---|
| 1, 3R, 4, 4X, 12 | Black | N | Y | N/A | H4X-05SB |
| 1, 3R, 4, 4X, 12 | Red/yellow | | | | H4X-05SR |

**+**

**Shafts for pistol handles**

| Length — in (mm) | Mounting depth (X) - in (mm) | Catalog no. |
|---|---|---|
| 7.9 (200) | 5.30~9.06 (135~230) | SH5-200 |
| 12.6 (320) | 5.30~13.78 (135~350) | SH5-320 |
| 15.7 (400) | 5.30~16.93 (135~430) | SH5-400 |

**OR**

**Flange handle (1) - requires shaft operated mechanism or cable operated mechanism + cable**

| NEMA type | Flange style | Test function | Padlockable | Defeatable | Catalog no. |
|---|---|---|---|---|---|
| 1, 3R, 4, 12 | Standard | N | Y | Y | FLH1 |
| 1, 3R, 4, 4X, 12 | Chrome plated | | | | FLH2 |

**Shaft operated flange mechanism (2) - includes shaft**

| For enclosure depth - in (mm) | Catalog no. |
|---|---|
| 6~24 (152~613) | FLRM |

**Cable operated flange mechanism and cable - must select mechanism (3) and cable (4)**

| Item / length — in (mm) | Catalog no. |
|---|---|
| Cable mechanism | FLCM |
| 36 (900) cable | FLC36 |
| 60 (1500) cable | FLC60 |
| 120 (3000) cable | FLC120 |

**OR**

**NFPA through the door handle kit - to be used with selector handle or front pistol handle**

| Color | Test function | Padlockable | Defeatable | Catalog no. |
|---|---|---|---|---|
| Red | N | Y | N | H79-2 |

**AND...**

Accessories

### Aux. contacts

**Auxiliary contacts**

| Contact type | No. of contacts | Continuous amp rating | Voltage (Vac) | Max. aux contacts per switch | Catalog no. |
|---|---|---|---|---|---|
| NO | 1 | 10 | 600 | 4 | BAC05 |
| NC | | | | | BAC06 |

**Dimensions — in (mm)**

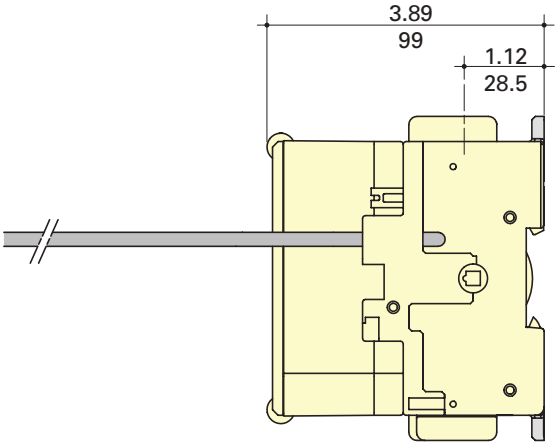


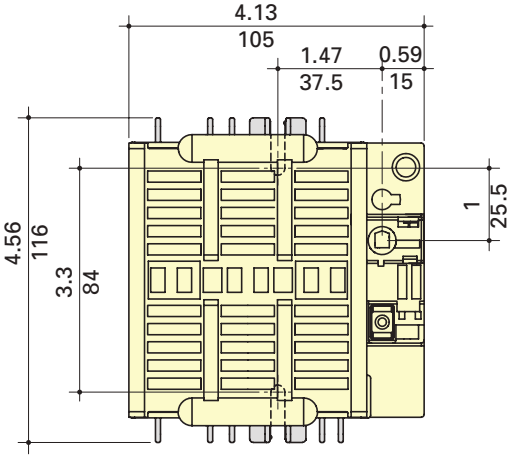


Direct mount handle

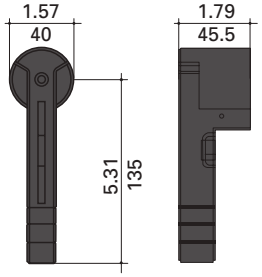


DIR-07

Flange handle

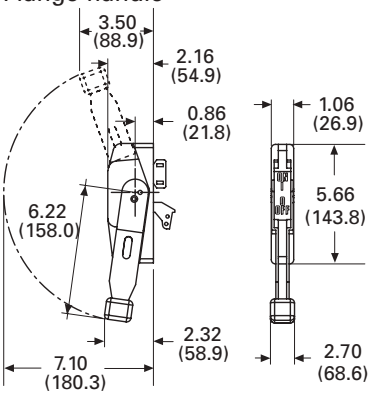


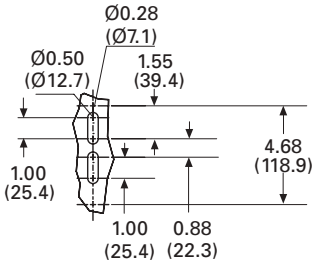


FLH_

External front and right side pistol handle

| Handle type | Direction of front operation | Direction of right side operation | Door drilling layout |
|---|---|---|---|

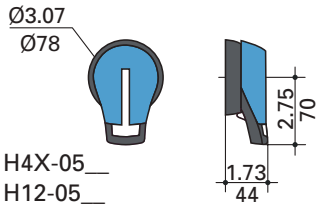


H4X-05__
H12-05__

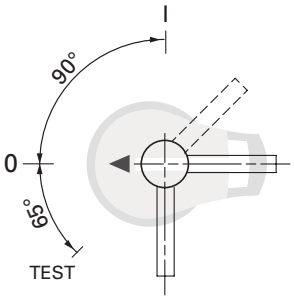


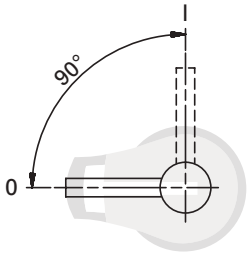


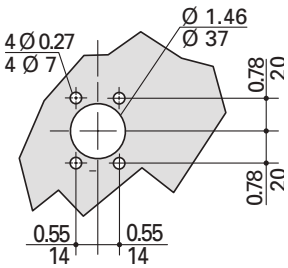

## Standard 60 amp Class J

**For a complete assembly, select:**

**Switch**

| Amps | Fuse class | Poles | SCCR (kA) | Max horsepower rating 1-phase 220/240 | 3-phase 220/240 | 3-phase 440/480 | 3-phase 600 | DC* 125 | DC* 250 | Conductor AWG size/type | Catalog no. |
|---|---|---|---|---|---|---|---|---|---|---|---|
| 60 | J | 2 | 200 | 10 | - | - | - | 5 | 10 | 12-10 Sol/12-1 Str 75°C Cu | RDF60J-2 |
| | | 3 | 200 | - | 15 | 30 | 50 | 5 | 10 | | RDF60J-3 |
| | | 4 | 200 | - | 15 | 30 | 50 | 5 | 10 | | RDF60J-4 |

* DC ratings use two poles in series.

**PLUS**

**Direct mount handle - mounts directly to switch, no shaft required**

| For switch cat. no. | Color | Test function | Padlockable | Catalog no. |
|---|---|---|---|---|
| All switches | Black | Y | Y | DIR-07 |

**OR**

**External front operated pistol handles - shaft required**

| NEMA type | Color | Test function | Padlockable | Defeatable | Catalog no. |
|---|---|---|---|---|---|
| 1, 3R, 12 | Black | N | Y | Y | H12-03B |
| 1, 3R, 12 | Red/yellow | | | | H12-03R |
| 1, 3R, 4, 4X, 12 | Black | | | | H4X-06B |
| 1, 3R, 4, 4X, 12 | Red/yellow | | | | H4X-06R |
| 1, 3R, 4, 4X, 12 | Black | Y | | | H4X-06TB |
| 1, 3R, 4, 4X, 12 | Red/yellow | | | | H4X-06TR |

**Or**

**Metallic hasp (heavy duty) external front operated pistol handles - shaft required**

| NEMA type | Color | Test function | Padlockable | Defeatable | Catalog no. |
|---|---|---|---|---|---|
| 1, 3R, 4, 4X, 12 | Black | N | Y | Y | H4X-06BHD |
| 1, 3R, 4, 4X, 12 | Red/yellow | | | | H4X-06RHD |

**External right side operated pistol handles - shaft required**

| NEMA type | Color | Test function | Padlockable | Defeatable | Catalog no. |
|---|---|---|---|---|---|
| 1, 3R, 4, 4X, 12 | Black | N | Y | N/A | H4X-06SB |
| 1, 3R, 4, 4X, 12 | Red/yellow | | | | H4X-06SR |

**+**

**Shafts for pistol handles**

| Length — in (mm) | Mounting depth (X) — in (mm) | Catalog no. |
|---|---|---|
| 7.9 (200) | 5.30~9.06 (135~230) | SH5-200 |
| 12.6 (320) | 5.30~13.78 (135~350) | SH5-320 |
| 15.7 (400) | 5.30~16.93 (135~430) | SH5-400 |

**OR**

**Flange handle (1) - requires shaft operated mechanism or cable operated mechanism + cable**

| NEMA type | Flange style | Test Function | Padlockable | Defeatable | Catalog no. |
|---|---|---|---|---|---|
| 1, 3R, 4, 12 | Standard | N | Y | Y | FLH1 |
| 1, 3R, 4, 4X, 12 | Chrome plated | | | | FLH2 |

**Shaft operated flange mechanism (2) - includes shaft**

| For enclosure depth — in (mm) | Catalog no. |
|---|---|
| 6~24 (152~613) | FLRM |

**Cable operated flange mechanism and cable - must select mechanism (3) and cable (4)**

| Item / length — in (mm) | Catalog no. |
|---|---|
| Cable mechanism | FLCM |
| 36 (900) cable | FLC36 |
| 60 (1500) cable | FLC60 |
| 120 (3000) cable | FLC120 |

**OR**

**NFPA through the door handle kit - to be used with front pistol handle**

| Color | Test function | Padlockable | Defeatable | Catalog no. |
|---|---|---|---|---|
| Red | N | Y | N | H79-2 |

**AND...**

**Auxiliary contacts**

| Contact type | No. of contacts | Continuous amp rating | Voltage (Vac) | Max number of aux contacts per switch | Catalog no. |
|---|---|---|---|---|---|
| NO | 1 | 10 | 600 | 4 | BAC05 |
| NC | | | | | BAC06 |

Select for standard applications — Switch — Handle — Accessories — Aux. contacts

**Dimensions — in (mm)**

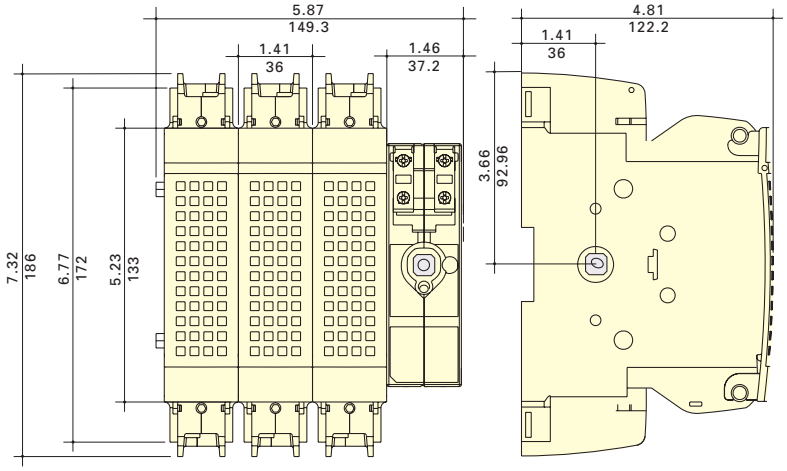


Direct mount handle

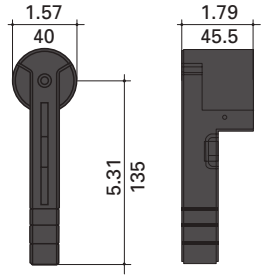


DIR-07

Flange handle

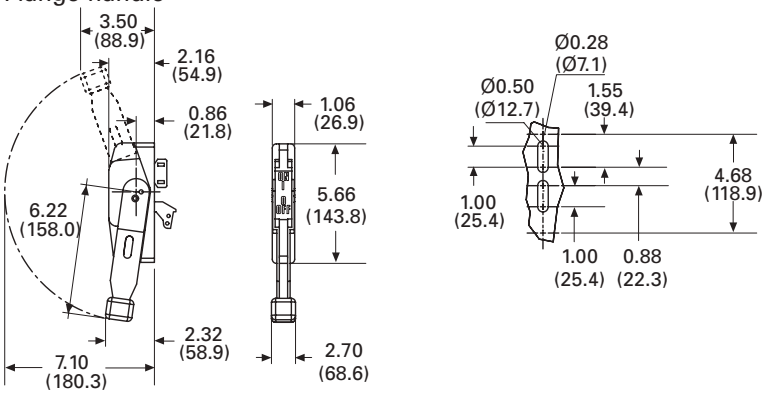


FLH_

External front and right side pistol handle

Handle type

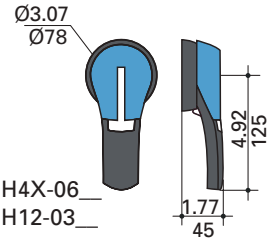


H4X-06__
H12-03__

Direction of front operation

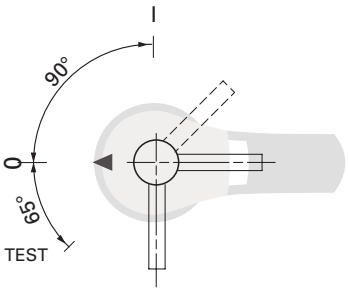


Direction of right side operation

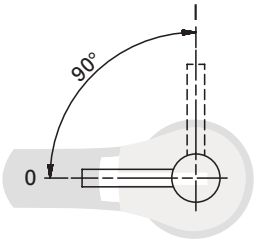


Door drilling layout

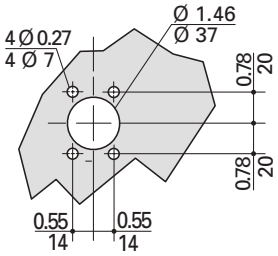

## Standard 100 amp Class J

**For a complete assembly, select:**

Select for standard applications

### Switch

**Switch**

| Amps | Fuse class | Poles | SCCR (kA) | Max horsepower rating: 1-phase 220/240 | 3-phase 220/240 | 3-phase 440/480 | 3-phase 600 | DC* 125 | DC* 250 | Conductor AWG size/type | Catalog no. |
|---|---|---|---|---|---|---|---|---|---|---|---|
| 100 | J | 2 | 200 | 10 | - | - | - | 7.5 | 20 | 12-10 Sol/12-1 Str 75°C Cu | RDF100J-2 |
| | | 3 | | - | 30 | 60 | 75 | 7.5 | 20 | | RDF100J-3 |
| | | 4 | | - | 30 | 60 | 75 | 7.5 | 20 | | RDF100J-4 |

* DC ratings use two poles in series.

**PLUS**

### Handles

**Direct mount handle - mounts directly to switch, no shaft required**

| For switch cat. no. | Color | Test function | Padlockable | Catalog no. |
|---|---|---|---|---|
| All switches | Black | Y | Y | DIR-07 |

**OR**

**External front operated pistol handles - shaft required**

| NEMA type | Color | Test function | Padlockable | Defeatable | Catalog no. |
|---|---|---|---|---|---|
| 1, 3R, 12 | Black | N | Y | Y | H12-03B |
| | Red/yellow | | | | H12-03R |
| 1, 3R, 4, 4X, 12 | Black | | | | H4X-06B |
| | Red/yellow | | | | H4X-06R |
| | Black | Y | | | H4X-06TB |
| | Red/yellow | | | | H4X-06TR |

Or

**Metallic hasp (heavy duty) external front operated pistol handles - shaft required**

| NEMA type | Color | Test function | Padlockable | Defeatable | Catalog no. |
|---|---|---|---|---|---|
| 1, 3R, 4, 4X, 12 | Black | N | Y | Y | H4X-06BHD |
| 1, 3R, 4, 4X, 12 | Red/yellow | | | | H4X-06RHD |

**External right side operated pistol handles - shaft required**

| NEMA type | Color | Test function | Padlockable | Defeatable | Catalog no. |
|---|---|---|---|---|---|
| 1, 3R, 4, 4X, 12 | Black | N | Y | N/A | H4X-06SB |
| | Red/yellow | | | | H4X-06SR |

+

**Shafts for pistol handles**

| Length — in (mm) | Mounting depth (X) - in (mm) | Catalog no. |
|---|---|---|
| 7.9 (200) | 5.30~9.06 (135~230) | SH5-200 |
| 12.6 (320) | 5.30~13.78 (135~350) | SH5-320 |
| 15.7 (400) | 5.30~16.93 (135~430) | SH5-400 |

**OR**

**Flange handle (1) - requires shaft operated mechanism or cable operated mechanism + cable**

| NEMA type | Flange style | Test function | Padlockable | Defeatable | Catalog no. |
|---|---|---|---|---|---|
| 1, 3R, 4, 12 | Standard | N | Y | Y | FLH1 |
| 1, 3R, 4, 4X, 12 | Chrome plated | | | | FLH2 |

**Shaft operated flange mechanism (2) - includes shaft**

| For enclosure depth — in (mm) | Catalog no. |
|---|---|
| 6~24 (152~613) | FLRM |

**Cable operated flange mechanism and cable - must select mechanism (3) and cable (4)**

| Item / length — in (mm) | Catalog no. |
|---|---|
| Cable mechanism | FLCM |
| 36 (900) cable | FLC36 |
| 60 (1500) cable | FLC60 |
| 120 (3000) cable | FLC120 |

**OR**

**NFPA through the door handle kit - to be used with front pistol handle**

| Color | Test function | Padlockable | Defeatable | Catalog no. |
|---|---|---|---|---|
| Red | N | Y | N | H79-2 |

AND...

Accessories

### Aux. contacts

**Auxiliary contacts**

| Contact type | No. of contacts | Continuous amp rating | Voltage (Vac) | Max number of aux contacts per switch | Catalog no. |
|---|---|---|---|---|---|
| NO | 1 | 10 | 600 | 4 | BAC05 |
| NC | | | | | BAC06 |

**Dimensions — in (mm)**

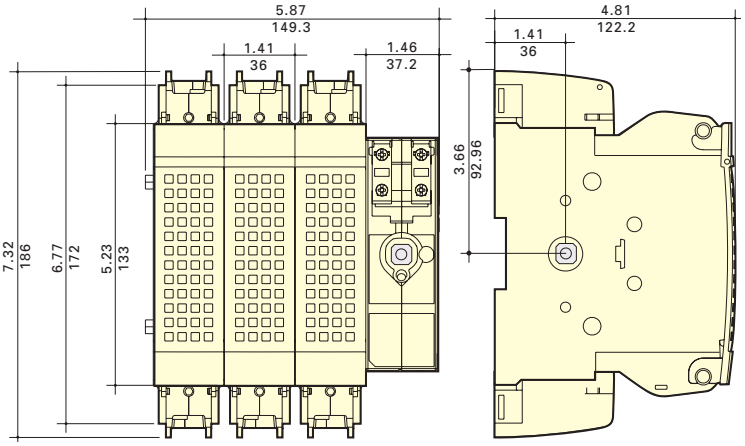


Direct mount handle

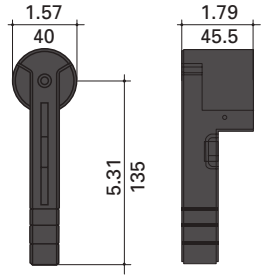


DIR-07

Flange handle

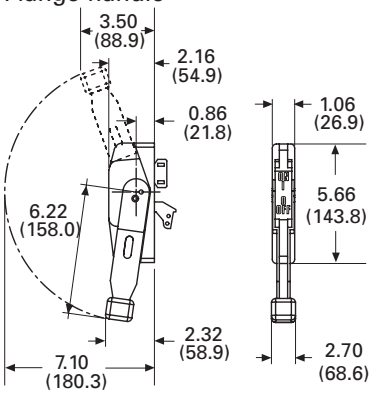


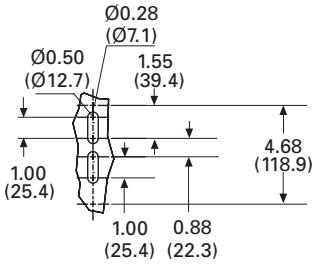


FLH_

External front and right side pistol handle

Handle type

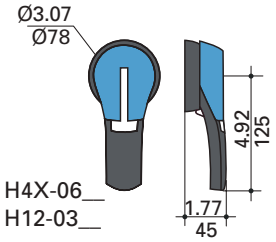


H4X-06__
H12-03__

Direction of front operation

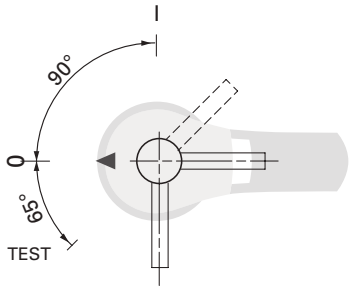


Direction of right side operation

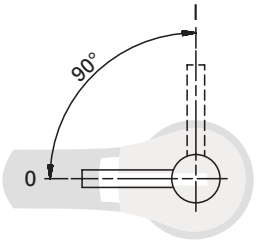


Door drilling layout

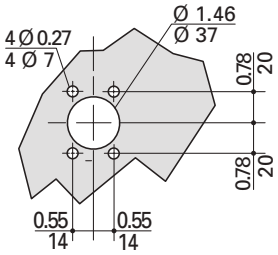

## Standard 200 and 400 amp Class J

**For a complete assembly, select:**

**Switch + lugs**

+

**Switch**

| Amps | Fuse class | Poles | SCCR (kA) | Max horsepower rating: 1-phase 220/240 | 3-phase 220/240 | 3-phase 440/480 | 3-phase 600 | DC* 125 | DC* 250 | Catalog no. |
|---|---|---|---|---|---|---|---|---|---|---|
| 200 | J | 2 | 200 | 10 | - | - | - | - | - | RDF200J-2 |
| | | 3 | | - | 60 | 125 | 150 | - | - | RDF200J-3 |
| | | 4 | | - | 60 | 125 | 150 | - | - | RDF200J-4 |
| 400 | | 2 | | 10 | - | - | - | 20 | 50 | RDF400J-2 |
| | | 3 | | - | 125 | 250 | 350 | 20 | 50 | RDF400J-3 |
| | | 4 | | - | 125 | 250 | 350 | 20 | 50 | RDF400J-4 |

* DC ratings use two poles in series.

**Terminal lug kit**

| Switch amps | Poles | Lugs per kit | AWG wire / type | Catalog no. |
|---|---|---|---|---|
| 200 | 2 | 2 | 6-300 kcmil 75°C Cu/Al | LUG1-2 |
| | 3 | 3 | | LUG1-3 |
| | 4 | 4 | | LUG1-4 |
| 400 | 2 | 2 | 4-600 kcmil or dual 1/0-250 kcmil 75°C Cu/Al | LUG2-2 |
| | 3 | 3 | | LUG2-3 |
| | 4 | 4 | | LUG2-4 |

**PLUS**

**Select for standard applications — Handles**

**Direct mount handle - mounts directly to switch, no shaft required**

| For switch cat. no. | Color | Test function | Padlockable | Catalog no. |
|---|---|---|---|---|
| All switches | Black | Y | Y | DIR-07 |

**OR**

**External front operated pistol handles - shaft required**

| NEMA type | Color | Test function | Padlockable | Defeatable | Catalog no. |
|---|---|---|---|---|---|
| 1, 3R, 12 | Black | N | Y | Y | H12-03B |
| | Red/yellow | | | | H12-03R |
| 1, 3R, 4, 4X, 12 | Black | | | | H4X-06B |
| | Red/yellow | | | | H4X-06R |
| | Black | Y | | | H4X-06TB |
| | Red/yellow | | | | H4X-06TR |

Or

**Metallic hasp (heavy duty) external front operated pistol handles - shaft required**

| NEMA type | Color | Test function | Padlockable | Defeatable | Catalog no. |
|---|---|---|---|---|---|
| 1, 3R, 4, 4X, 12 | Black | N | Y | Y | H4X-06BHD |
| | Red/yellow | | | | H4X-06RHD |

**External right side operated pistol handles - shaft required**

| NEMA type | Color | Test function | Padlockable | Defeatable | Catalog no. |
|---|---|---|---|---|---|
| 1, 3R, 4, 4X, 12 | Black | N | Y | N/A | H4X-06SB |
| | Red/yellow | | | | H4X-06SR |

+

**Shafts for pistol handles**

| Length — in (mm) | Mounting depth (X) — in (mm) | Catalog no. |
|---|---|---|
| 7.9 (200) | 200 A: 5.70-9.06 (145-230) | SH5-200 |
| | 400 A: 7.87-10.24 (200-260) | |
| 12.6 (320) | 200 A: 5.70-13.78 (145-350) | SH5-320 |
| | 400 A: 7.87-16.93 (200-380) | |
| 15.7 (400) | 200 A: 5.70-16.93 (145-430) | SH5-400 |
| | 400 A: 7.87-18.10 (200-460) | |

**OR**

**Flange handle (1) 200 A only - requires shaft operated mechanism or cable operated mechanism + cable**

| NEMA type | Flange style | Test function | Padlockable | Defeatable | Catalog no. |
|---|---|---|---|---|---|
| 1, 3R, 4, 12 | Standard | N | Y | Y | FLH1 |
| 1, 3R, 4, 4X, 12 | Chrome plated | | | | FLH2 |

**Shaft operated flange mechanism (2) 200 A only - includes shaft**

| For enclosure depth — in (mm) | Catalog no. |
|---|---|
| 6~24 (152~613) | FLRM |

**Cable operated flange mechanism and cable 200 A only - must select Mechanism (3) and Cable (4)**

| Item — in (mm) | Catalog no. |
|---|---|
| Cable mechanism | FLCM |
| 36 (900) cable | FLC36 |
| 60 (1500) cable | FLC60 |
| 120 (3000) cable | FLC120 |

**OR**

**NFPA through the door handle kit - to be used with front pistol handle**

| Use with switch | Color | Test function | Padlockable | Defeatable | Catalog no. |
|---|---|---|---|---|---|
| RDF200J-_ | Red | N | Y | N | H79-2 |
| RDF400J-_ | | | | | H79-3 |

**AND...**

Accessories — Aux. contacts

**Auxiliary contacts**

| Contact type | No. of contacts | Continuous amp rating | Voltage (Vac) | Max number of aux contacts per switch catalog number | Catalog no. |
|---|---|---|---|---|---|
| NO | 1 | 10 | 600 | RDF200J-__: 4 | BAC05 |
| NC | | | | RDF400J-__: 8 | BAC06 |

**AND...**

Accessories — Shrouds

**Terminal shrouds - includes terminal shroud for lineside or loadside**

| Switch amps | Poles | Catalog no. |
|---|---|---|
| 200 | 2 | TSH8-2TB |
| | 3 | TSH8-3TB |
| | 4 | TSH8-4TB |
| 400 | 2 | TSH9-2TB |
| | 3 | TSH9-3TB |
| | 4 | TSH9-4TB |

Disconnect switches

## Dimensions — in (mm)

RDF200J-3

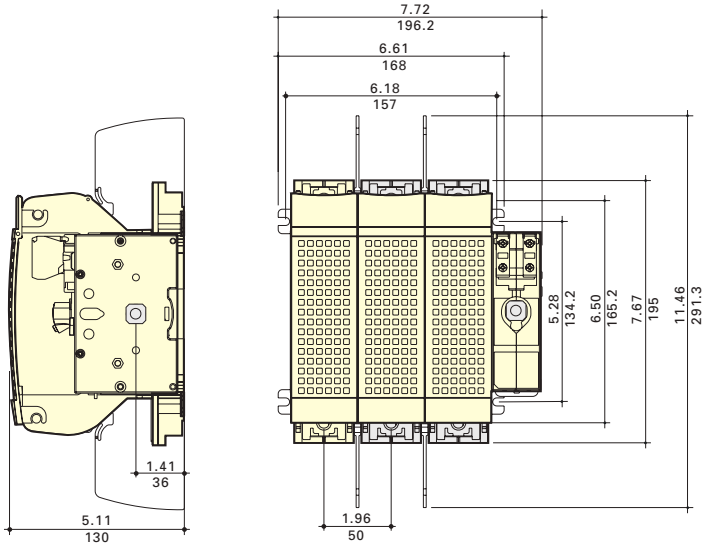


RDF400J-3

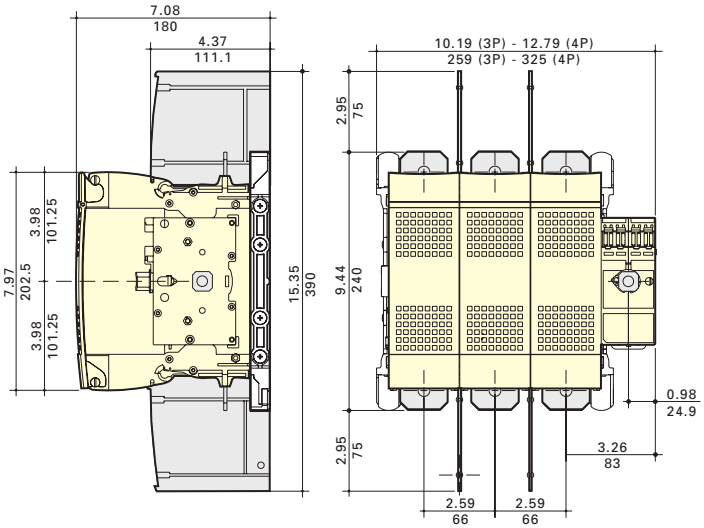

**Dimensions — in (mm)**

DIR-07 direct mount handle

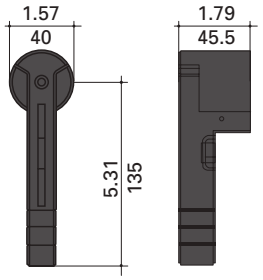


FLH_ flange handle

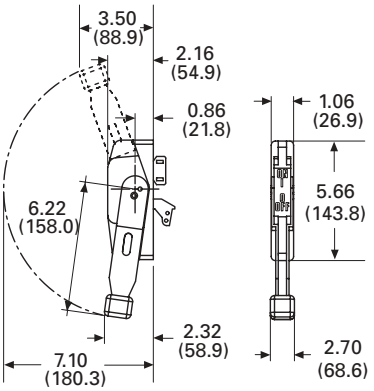


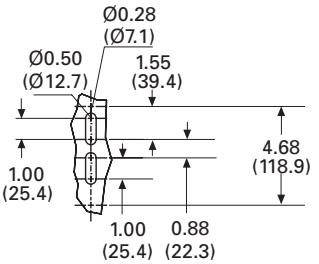


External front and right side pistol handle

Handle type

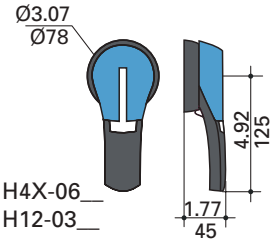


Direction of front operation

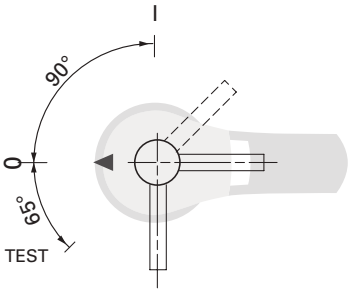


Direction of right side operation

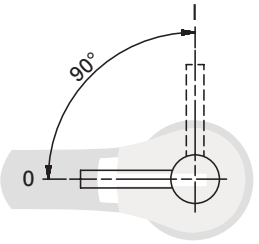


Door drilling layout

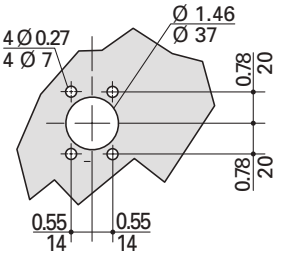


Terminal lugs

200 A (LUG1-__)

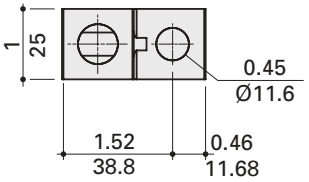


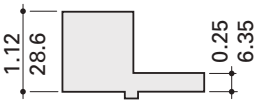


400 A (LUG2-__)

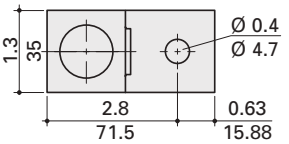


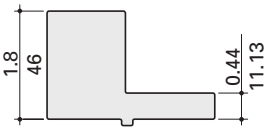

## Standard 600 amp Class J and 800 amp Class L

**For a complete assembly, select:**

**Select for standard application**

### Switch + lugs

**Switch**

| Amps | Fuse class | Poles | SCCR (kA) | Max horsepower rating, 3-phase 220/240 | 440/480 | 600 | Catalog no. |
|---|---|---|---|---|---|---|---|
| 600 | J | 2 | 200 | - | - | - | RDF600J-2 |
| | | 3 | | 200 | 400 | 500 | RDF600J-3 |
| | | 4 | | 200 | 400 | 500 | RDF600J-4 |
| 800 | L | 2 | | - | - | - | RDF800L-2 |
| | | 3 | | 200 | 500 | 500 | RDF800L-3 |
| | | 4 | | 200 | 500 | 500 | RDF800L-4 |

+

**Terminal lug kit**

| Switch amps | Poles | Lugs per kit | Conductor AWG size / type | Catalog no. |
|---|---|---|---|---|
| 600-800 | 2 | 2 | (2) 2-600 kcmil 75°C Cu/ Al | LUG5-2 |
| | 3 | 3 | | LUG5-3 |
| | 4 | 4 | | LUG5-4 |

**PLUS**

### Handles

**Direct mount handle - mounts directly to switch, no shaft required**

| For switch cat. no. | Color | Test function | Padlockable | Defeatable | Catalog no. |
|---|---|---|---|---|---|
| All switches | Black | Y | Y | N | DIR-08 |

**OR**

Or

**External front operated pistol handles - shaft required**

| NEMA type | Color | Test function | Padlockable | Defeatable | Catalog no. |
|---|---|---|---|---|---|
| 1, 3R, 4, 4X, 12 | Black | N | Y | Y | H4X-07B |
| | Red/yellow | | | | H4X-07R |

**Metallic hasp (heavy duty) external front operated pistol handles - shaft required**

| NEMA type | Color | Test function | Padlockable | Defeatable | Catalog no. |
|---|---|---|---|---|---|
| 1, 3R, 4, 4X, 12 | Black | N | Y | Y | H4X-07BHD |
| | Red/yellow | | | | H4X-07RHD |

+

**Shafts for pistol handles**

| Length — in (mm) | Mounting depth (X) — in (mm) | Catalog no. |
|---|---|---|
| 7.9 (200) | 10.63~11.97 (270~304) | SH7-200 |
| 12.6 (320) | 10.63~16.69 (270~424) | SH7-320 |
| 15.7 (400) | 10.63~19.84 (270~504) | SH7-400 |

**OR**

**NFPA through the door handle kit - to be used with front pistol handle**

| For switch cat. no. | Color | Test function | Padlockable | Defeatable | Catalog no. |
|---|---|---|---|---|---|
| All switches | Red | N | Y | N | H79-4 |

**AND...**

**Accessories**

### Aux. contacts

**Auxiliary contacts**

| Contact type | No. of contacts | Continuous amp rating | Voltage (Vac) | Max number of aux contacts per switch | Catalog no. |
|---|---|---|---|---|---|
| NO | 1 | 10 | 600 | 8 | BAC05 |
| NC | | | | | BAC06 |

**AND...**

### Shrouds

**Terminal shrouds - includes terminal shroud for lineside or loadside**

| Switch amps | Poles | Catalog no. |
|---|---|---|
| 600-800 | 2 | TSH10-2TB |
| | 3 | TSH10-3TB |
| | 4 | TSH10-4TB |

**Dimensions — in (mm)**

RDF600J-3 and RDF800L-3

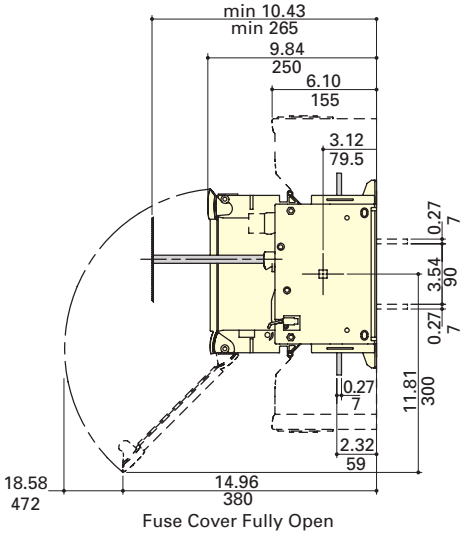


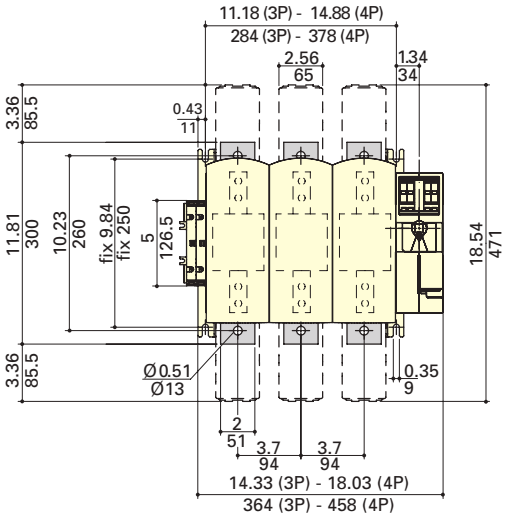


Dir-08 drect mount handle

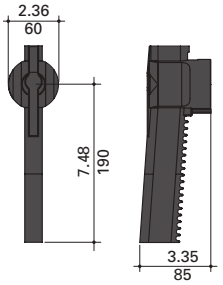


External front pistol handle

Handle type

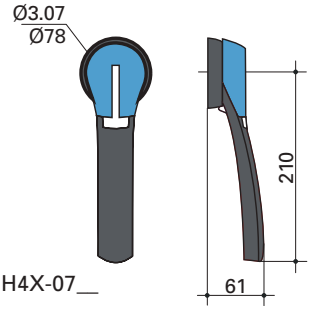


H4X-07__

Direction of front operation

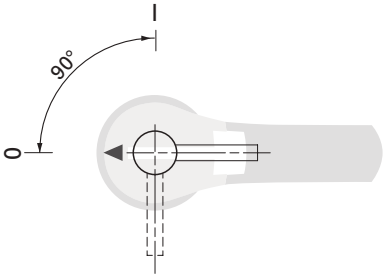


Door drilling layout

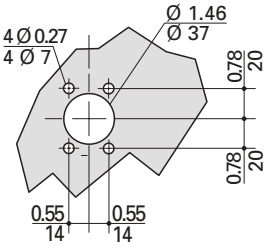


Terminal lugs

600 to 800 A (LUG5-__)

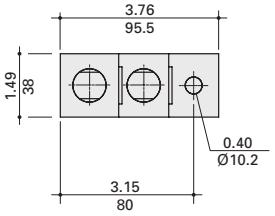


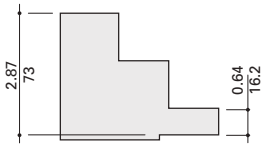

# UL 98 non-fused rotary disconnect switches — 30 to 1200 amps

Bussmann series UL 98 non-fused rotary disconnect switches are versatile switches that "break" and "make" power circuits ON and OFF load.

## Agency information

- UL 98, Guide WHTY, File E155130
- CSA 22.2 No. 4, File 257020
- Conforms with IEC 60947-3

## Features

- Make and break power under load
- Up to 200 kA SCCR
- Panel mount (30-100 A compact DIN-Rail or panel mount)
- Disconnect switches are front, right side and direct handle operable (30-100 A)
- Finger-safe (30-100 A compact only)
- Fully visualized breaking (100-1200 A)

## Online resources

Visit Eaton.com/bussmannseries for:

- CAD drawings
- Instruction sheets
- UL information

## Related Bussmann series products

| Fuse blocks |
|---|
| Modular Class H(K), J and RK fuse blocks up to 600 A |
| Modular Class H(K), J and RK power distribution fuse blocks up to 400 A |
| Modular, finger-safe CH Class CC and J, and UL supplemental and IEC 10x38mm DIN-Rail holders up to 60 A |
| Finger-safe Optima Class CC, UL supplemental and IEC 10x38mm DIN-Rail/panel mount holders up to 30 A |
| Finger-safe Optima™ Class CC, UL supplemental and IEC 10x38mm DIN-Rail/panel mount protection modules up to 30 A |

RD30-3

RD200-3

RD600-3

## IEC specifications

| | | Catalog no. | | | | | | | | | |
|---|---|---|---|---|---|---|---|---|---|---|---|
| **3-pole** | | **RD30-3** | **RD60-3** | **RD100-3** | **RD100-3-SCCR** | **RD200-3** | **RD400-3** | **RD600-3** | **RD800-3** | **RD1000-3** | **RD1200-3** |
| **4-pole** | | **—** | **—** | **—** | **—** | **RD200-4** | **RD400-4** | **RD600-4** | **RD800-4** | **RD1000-4** | **RD1200-4** |
| Thermal current $I_{th}$ @ 40°C (A) | | 30 | 60 | 100 | 100 | 200 | 400 | — | — | — | — |
| Rated insulation voltage $U_i$ (V) | | 800 | 800 | 800 | 1000 | 1000 | 1000 | 1000 | 1000 | 1000 | 1000 |
| Rated impulse withstand voltage $U_{imp}$ (kV) | | 8 | 8 | 8 | 8 | 8 | 8 | 12 | 12 | 12 | 12 |
| **Rated operation currents $I_e$ (A)** | | | | | | | | | | | |
| Rated voltage (Vac) | Load duty category | A [1] | A [1] | A [1] | A [1] | A [1] | A [1] | A [1] | A [1] | A [1] | A [1] |
| 400 | AC-22 A | 32 | 63 | 100 | 100 | 200 | 400 | 630 | 800 | 1000 | 1200 |
| | AC-23 A | | | | | | | | | | 1000 |
| 690 | AC-22 A | | | 80 | | | | 500 | 630 | 630 | 630 |
| | AC-23 A | | | 63 | | | 315 | 200 | 400 | 400 | 400 |
| **Operational power (Vac) in AC-23 (kW)** | | | | | | | | | | | |
| 400 V w/o prebreak AC [1, 2] | | 15 | 30 | 45 | 51 | 100 | 220 | 355 | 450 | 560 | 560 |
| 500 V w/o prebreak AC [1, 2] | | | | | 63 | 140 | 280 | 450 | 560 | | |
| 690 V w/o prebreak AC [1, 2] | | 18.5 | | | 90 | 185 | 185 | 185 | 400 | 400 | 400 |
| **Overload capacity ($U_e$ 415 Vac)** | | | | | | | | | | | |
| Rated short-circuit making capacity $I_{cm}$ (kA peak) [3] | | 12 | 12 | 12 | 17.6 | 32 | 48 | 48 | 75 | 48 | 75 |
| **Fuse protected short-circuit withstand** | | | | | | | | | | | |
| (kA RMS prospective) | | | | | | | | | | | |
| Short-circuit current (kA) [3] | | 50 | 50 | 25 | 200 | 200 | 200 | 100 | 100 | 100 | 100 |
| Associated fuse rating (A) [3] | | 32 | 63 | 100 | 100 | | 400 | 630 | 800 | 1000 | 1250 |
| **Connection** | | | | | | | | | | | |
| Minimum Cu cable cross section (mm²) | | 2.5 | 2.5 | 10 | 35 | 70 | 185 | 2x150 | 2x185 | 2x240 | — |
| Minimum Cu busbar section (mm²) | | — | — | — | — | — | — | 2x30x5 | 2x40x5 | 2x50x5 | 2x60x5 |
| Maximum Cu cable section (mm²) | | 70 | 70 | 70 | 300 | 300 | 600 | — | — | — | — |

1 A/B: Category with index A = frequent operation; category with index B = infrequent operation.
2 The power value is given for information only; the current values vary from one manufacturer to another.
3 For a rated operating voltage, Ue = 400 Vac.

UL specifications

RD30-3 | RD200-3 | RD600-3

| | | Catalog no. | | | | | | | | | |
|---|---|---|---|---|---|---|---|---|---|---|---|
| **3-pole** | | **RD30-3** | **RD60-3** | **RD100-3** | **RD100-3-SCCR** | **RD200-3** | **RD400-3** | **RD600-3** | **RD800-3** | **RD1000-3** | **RD1200-3** |
| **4-pole** | | **—** | **—** | **—** | **—** | **RD200-4** | **RD400-4** | **RD600-4** | **RD800-4** | **RD1000-4** | **RD1200-4** |
| UL standard | | UL 98 | UL 98 | UL 98 | UL 98 | UL 98 | UL 98 | UL 98 | UL 98 | UL 98 | UL 98 |
| Max ampacity | | 30 A | 60 A | 100 A | 100 A | 200 A | 400 A | 600 A | 800 A | 1000 A | 1200 A |
| Switch type | | Compact | Compact | Compact | Standard | Standard | Standard | Standard | Standard | Standard | Standard |
| Handle operation | | Front/Side | Front/Side | Front/Side | Front | Front | Front | Front | Front | Front | Front |
| **UL electrical ratings** | | | | | | | | | | | |
| Max voltage (AC) | | 600 Vac | 600 Vac | 600 Vac | 600 Vac | 600 Vac | 600 Vac | 600 Vac | 600 Vac | 600 Vac | 600 Vac |
| Max voltage (DC) | | — | — | — | 250 Vdc | 250 Vdc | — | 250 Vdc | — | — | — |
| Max. AC Hp ratings | 1-phase, 120 | 2 | 3 | 5 | — | — | — | — | — | — | — |
| | 1-phase, 240 | 5 | 10 | 10 | 10 | 10 | — | — | — | — | — |
| | 3-phase, 240 | 10 | 20 | 20 | 30 | 75 | 125 | 200 | 200 | 200 | 200 |
| | 3-phase, 480 | 20 | 40 | 50 | 75 | 150 | 250 | 400 | 500 | 500 | 500 |
| | 3-phase, 600 | 25 | 50 | 50 | 100 | 200 | 350 | 350 | 500 | 500 | 500 |
| DC Hp ratings | 125 | — | — | — | — | — | — | 20 | — | — | — |
| | 250 | — | — | — | — | — | — | 50 | — | — | — |
| **Electrical characteristics** | | | | | | | | | | | |
| SCCR with fuse (kA) | | 100 | 100 | 25 /100* | 200 | 200 | 200 | 200 | 100 | 100 | 100 |
| Fuse class | | J | J | J | J | J | J | J | L | L | L |
| Max. fuse rating (A) | | 30 | 60 | 100 | 10A | 200 | 400 | 600 | 800 | 1000 | 1200 |
| Terminal lugs/kits | | Integral | Integral | Integral | • | • | • | • | • | • | • |
| Lug mounting torque - lb-in (N•m) | | — | — | — | 160 (18) | 160 (18) | LUG2-_ 310 (35)<br>LUG3-_ 398 (45) | 310 (35) | 310 (35) | 310 (35) | 310 (35) |
| Wire type | | 75°C Cu | 75°C Cu | 75°C Cu | 75°C Cu/ Al | 75°C Cu/ Al | 75°C Cu/ Al | 75°C Cu/ Al | 75°C Cu/ Al | 75°C Cu/ Al | 75°C Cu/ Al |
| Wire range and torque - lb-in (N•m) | Solid | 12-10, 35.4 (4) | 12-10, 35.4 (4) | 12-10, 35.4 (4) | — | — | — | — | — | — | — |
| | Stranded | 10-1, 35.4 (4) | 10-1, 35.4 (4) | 10-1, 35.4 (4) | 6-300 kcmil, 275 (31) | 6-300 kcmil, 275 (31) | LUG2-_ 4-600 kcmil, 550 (62) | (2) 2-600 kcmil, 375 (42.4) | (4) 2-600 kcmil, 375 (42.4) | (4) 2-600 kcmil, 375 (42.4) | (4) 2-600 kcmil, 375 (42.4) |
| | | 1/0, 39.8 (4.5) | 1/0, 39.8 (4.5) | 1/0, 39.8 (4.5) | | | Dual 1/0-250 kcmil, 550 (62) | | | | |
| | | 2/0, 44.3 (5) | 2/0, 44.3 (5) | 2/0, 44.3 (5) | | | LUG3-_: (2) 6-2, 200 (22.6) | | | | |
| | | | | | | | (2) 1-350 kcmil, 375 (42.4) | | | | |
| **Mechanical characteristics** | | | | | | | | | | | |
| Endurances/Cycles | | 10,000 | 10,000 | 10,000 | 10,000 | 8000 | 6000 | 6000 | 3500 | 3500 | 3500 |
| **Physical characteristics** | | | | | | | | | | | |
| Dimensions | | See drawings on product pages | | | | | | | | | |
| Weight - lbs (kg) | 3-pole | 1.3 (0.6) | 1.3 (0.6) | 1.3 (0.6) | 4.2 (1.91) | 4.2 (1.91) | 10.0 (4.6) | 18.1 (8.2) | 19.6 (8.9) | 19.6 (8.9) | 19.6 (8.9) |
| | 4-pole | — | — | — | — | 5.0 (2.3) | 12.3 (5.6) | 23.9 (10.9) | 25.3 (11.5) | 25.3 (11.5) | 25.3 (11.5) |
| **Environmental** | | | | | | | | | | | |
| Operating Temperature | | -20 to 70°C | -20 to 70°C | -20 to 70°C | -20 to 70°C | -20 to 70°C | -20 to 70°C | -20 to 70°C | -20 to 70°C | -20 to 70°C | -20 to 70°C |
| Flammability Rating | | UL 94-V0 | UL 94-V0 | UL 94-V0 | UL 94-V0 | UL 94-V0 | UL 94-V0 | UL 94-V0 | UL 94-V0 | UL 94-V0 | UL 94-V0 |
| **Accessories** | | | | | | | | | | | |
| Lug kit cat. no. | 3-pole | Integral | Integral | Integral | • | • | • | • | • | • | • |
| | 4-pole | — | — | — | — | • | • | • | • | • | • |
| Handles | NEMA 1, 3R, 12 | • | • | • | • | • | • | — | — | — | — |
| | NEMA 1, 3R, 4, 4X, 12 | • | • | • | • | • | • | • | • | • | • |
| | Direct | • | • | • | • | • | • | • | • | • | • |
| | Front Pistol | • | • | • | • | • | • | • | • | • | • |
| | Front or Side Selector | • | • | • | — | — | — | — | — | — | — |
| Shaft c/s - mm | | 5x5 | 5x5 | 5x5 | 10x10 | 10x10 | 10x10 | 12x12 | 12x12 | 12x12 | 12x12 |
| Shaft guide | | • | • | • | • | • | • | • | • | •• | • |
| Shrouds | | • | • | • | • | • | • | • | • | • | • |
| Additional pole accessory | | • | • | • | — | — | — | — | — | — | — |
| Auxiliary contacts | NO + NC | • | • | • | • | • | • | • | • | • | • |
| | (2) NO | • | • | • | — | — | — | — | — | — | — |

• Available, see product page for details and catalog numbers.
— Not available.
* 25 kA @ 600 Vac, 100 kA @ 480 Vac.

# UL 98 non-fused rotary disconnect switches — 30, 60 and compact 100 A

**For a complete assembly, select:**

Select for standard application

## Switch

| Amps | Poles | SCCR (kA) | Max horsepower rating 1-phase 120 | 1-phase 220/240 | 3-phase 220/240 | 3-phase 440/480 | 3-phase 600 | Conductor AWG size/type | Catalog no. |
|---|---|---|---|---|---|---|---|---|---|
| 30 | 3 | 100 | 2 | 5 | 10 | 20 | 25 | 10-2/0 Str/12-10 Sol 75°C Cu | RD30-3 |
| 60 | | | 3 | 10 | 20 | 40 | 50 | | RD60-3 |
| 100 | | 25/100* | 5 | 10 | 20 | 50 | 50 | | RD100-3 |

* 100 kA @480 Vac, 25 kA @ 600 Vac.

**PLUS**

## Handles

**Direct mount handle - mounts directly to switch, no shaft required**

| For switch cat. no. | Color | Test function | Padlockable | Catalog no. |
|---|---|---|---|---|
| All switches | Black | N | Y - On Switch | DIR-02 |

**OR**

1 2

**External front or right side operated selector handles - shaft required**

| NEMA type | Color | Handle length | Test function | Padlockable | Catalog no. |
|---|---|---|---|---|---|
| 1, 3R, 4, 4X, 12 | Black | Short | N | Y | H4X-01B (1) |
| | Red/yellow | Short | | | H4X-01R (1) |
| | Black | Long | | | H4X-02B (2) |
| | Red/yellow | Long | | | H4X-02R (2) |

**Or**

**External front operated pistol handles - shaft required**

| NEMA type | Color | Handle length | Test function | Padlockable | Defeatable | Catalog no. |
|---|---|---|---|---|---|---|
| 1, 3R, 4, 4X, 12 | Black | — | N | Y | Y | H4X-03B |
| | Red/yellow | — | | | | H4X-03R |

**Metallic hasp (heavy duty) external front operated pistol handles - shaft required**

| NEMA type | Color | Handle length | Test function | Padlockable | Defeatable | Catalog no. |
|---|---|---|---|---|---|---|
| 1, 3R, 4, 4X, 12 | Black | — | N | Y | Y | H4X-03BHD |
| | Red/yellow | — | | | | H4X-03RHD |

**+**

1

**Shafts for selector handles**

| Length — in (mm) | Mounting depth (X) — in (mm) | Catalog no. |
|---|---|---|
| 5.9 (150) | 3.50~7.60 (89~193) | SH4-150 (1) |
| 7.9 (200) | 3.50~9.50 (89~241) | SH4-200 (1) |
| 12.6 (320) | 3.50~14.9 (89~378) | SH4-320 (1) |

2

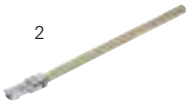

**Shafts for pistol handles**

| Length — in (mm) | Mounting depth (X) - in (mm) | Catalog no. |
|---|---|---|
| 7.9 (200) | 3.30~7.40 (84~188) | SH3-200 (2) |
| 12.6 (320) | 3.30~9.30 (84~236) | SH3-320 (2) |
| 15.7 (400) | 3.30~14.7 (84~373) | SH3-400 (2) |

**+**

**Shaft guide for selector handles**

| | Catalog no. |
|---|---|
| Required for 12.6" (320mm) long shafts, optional for other lengths | SH-GUIDE1 |

**Shaft guide for pistol handles**

| | Catalog no. |
|---|---|
| Required for 15.7î (400mm) long shafts, optional for other lengths | SH-GUIDE2 |

**AND...**

Accessories

## Aux. contacts

**Auxiliary contacts**

| Contact type | No. of contacts | Continuous amp rating | Voltage (Vac) | Max number of units per switch | Catalog no. |
|---|---|---|---|---|---|
| NO + NC | 1 of each | 10 | 240 | 2 (1 per side/4 contacts total) | BAC01 |
| NO | 2 | | | 2 (1 per side/4 contacts total) | BAC02 |

**AND...**

## Shrouds

**Terminal shrouds - includes terminal shroud for both lineside and loadside**

| Switch amps | Poles | Location on switch | Catalog no. |
|---|---|---|---|
| All switch-es | 1 (for switched 4th pole) | Lineside and loadside | TSH3-1TB |
| | 3 | | TSH3-3TB |

**AND...**

## Sw. 4th pole

**Switched 4th Pole - converts 3-pole switch to 4-pole**

| Switch amps | Catalog no. |
|---|---|
| 30 | POLE98-30 |
| 60 | POLE98-60 |
| 100 | POLE98-100 |

Auxiliary contact configurations

Possible 4th pole configurations

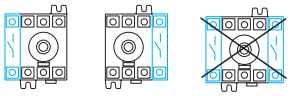

## Dimensions - in (mm)

### Direct handle operation

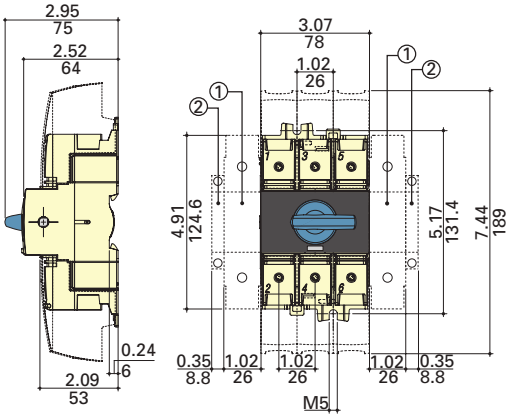


### External front operation

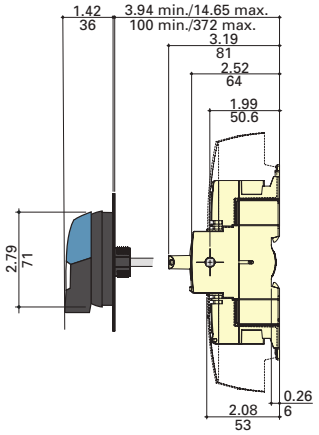


### External right side operation

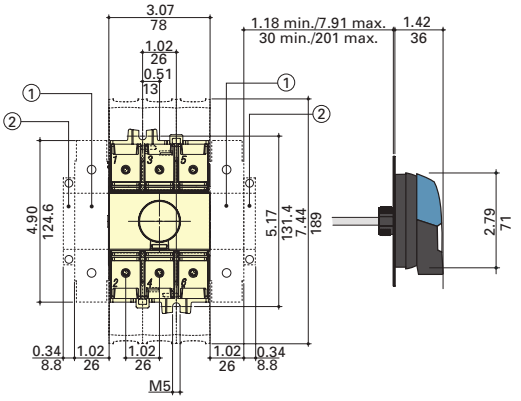


1. Position for 1 switched 4th pole (1 per device max.) or 1 auxiliary contact.
2. Position for 1 auxiliary contact only.

Note: Maximum of 4 Auxiliary contacts, or 3 Auxiliary contacts + one switched 4th pole.

### External front/right side operated selector handle, front operated pistol handle

Handle type

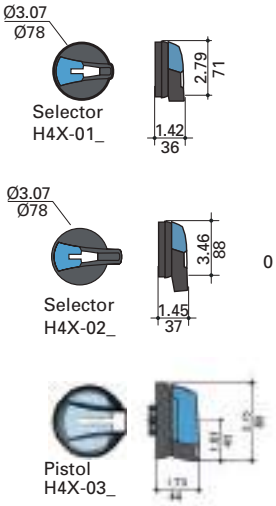


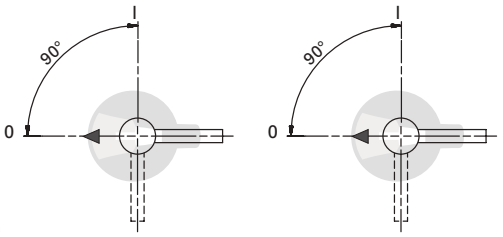


Door drilling layouts

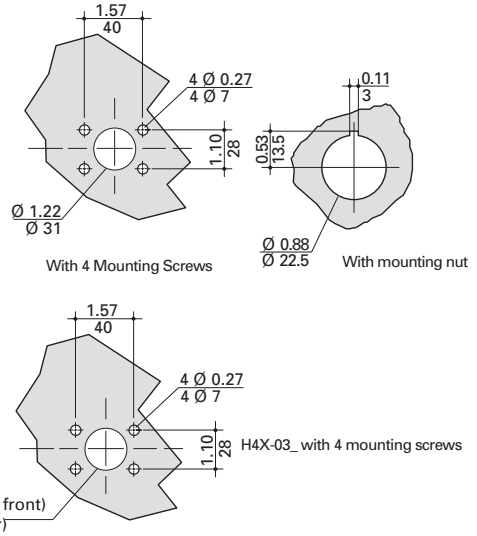

## UL 98 non-fused rotary disconnect switches—100, 200 and compact 400 A

**For a complete assembly, select:**

Select for standard application

### Switch

+

| Amps | Poles | SCCR (kA) | Max horsepower rating 1-phase 220/240 | 3-phase 220/240 | 3-phase 440/480 | 3-phase 600 | Catalog no. |
|---|---|---|---|---|---|---|---|
| 100 | 3 | 200 | 10 | 30 | 75 | 100 | RD100-3-SCCR |
| 200 | 3 | | 10 | 75 | 150 | 200 | RD200-3 |
| | 4 | | 10 | 75 | 150 | 200 | RD200-4 |
| 400 | 3 | | - | 125 | 250 | 350 | RD400-3 |
| | 4 | | - | 125 | 250 | 350 | RD400-4 |

**Terminal lug kit**

| Switch amps | Poles | Lugs per kit | Conductor AWG size/type | Catalog no. |
|---|---|---|---|---|
| 100-200 | 2 | 2 | 6-300 kcmil 75°C Cu/ Al | LUG1-2 |
| | 3 | 3 | | LUG1-3 |
| | 4 | 4 | | LUG1-4 |
| 400 | 2 | 2 | 4-600 kcmil or Dual 1/0-250 kcmil 75°C Cu/ Al | LUG2-2 |
| | 3 | 3 | | LUG2-3 |
| | 4 | 4 | | LUG2-4 |
| | 2 | 2 | (2) 6-350 kcmil 75°C Cu/ Al | LUG3-2 |
| | 3 | 3 | | LUG3-3 |
| | 4 | 4 | | LUG3-4 |

**PLUS**

### Handle

**Direct mount handle - mounts directly to switch, no shaft required**

| For switch cat. no. | Color | Test function | Padlockable | Catalog no. |
|---|---|---|---|---|
| All switches | Black | N | Y | DIR-03 |

**OR**

Or

**External front operated pistol handles - shaft required**

| NEMA type | Color | Test function | Padlockable | Defeatable | Catalog no. |
|---|---|---|---|---|---|
| 1, 3R, 12 | Black | N | Y | Y | H12-03B |
| | Red/yellow | | | | H12-03R |
| 1, 3R, 4, 4X, 12 | Black | | | | H4X-06B |
| | Red/yellow | | | | H4X-06R |

Metallic hasp (heavy duty) external front operated pistol handles - shaft required

| NEMA type | Color | Test function | Padlockable | Defeatable | Catalog no. |
|---|---|---|---|---|---|
| 1, 3R, 4, 4X, 12 | Black | N | Y | Y | H4X-06BHD |
| | Red/yellow | | | | H4X-06RHD |

+

**Shafts for pistol handles**

| Length — in (mm) | Mounting depth (X) - in (mm) | Catalog no. |
|---|---|---|
| 7.9 (200) | 5.31~10.43 (135~265) | SH5-200 |
| 12.6 (320) | 5.31~15.16 (135~385) | SH5-320 |
| 15.7 (400) | 5.31~18.31 (135~465) | SH5-400 |

+

**Shaft Guide**

| | Catalog no. |
|---|---|
| Required for 15.7î (400mm) long shafts, optional for other lengths | SH-GUIDE2 |

**AND...**

Accessories

### Aux. contacts

**Auxiliary contacts**

| Contact type | No. of contacts | Continuous amp rating | Voltage Vac | Max number of aux contacts per switch | Catalog no. |
|---|---|---|---|---|---|
| NO + NC | 1 of each | 10.1 | 125-250 | 2 | BAC03* |
| NO + NC | | | | | BAC04* |
| NO + NC | | 1 | 125 | | BAC11* |
| NO + NC | | | | | BAC12* |

* For one auxiliary contact, install either BAC03 or BAC11. For two auxiliary contacts, install BAC03 + BAC04, or BAC11 + BAC12.

**AND...**

### Shrouds

**Terminal shrouds - includes terminal shroud for Lineside or loadside**

| Switch amps | Poles | Location on switch | Catalog no. |
|---|---|---|---|
| 100-200 | 3 | Lineside | TSH4-3T |
| | | Loadside | TSH4-3B |
| | 4 | Lineside or loadside | TSH4-4TB |
| 400 | 3 | Lineside | TSH5-3T |
| | | Loadside | TSH5-3B |
| | 4 | Lineside or loadside | TSH5-4TB |

## Dimensions — in (mm)

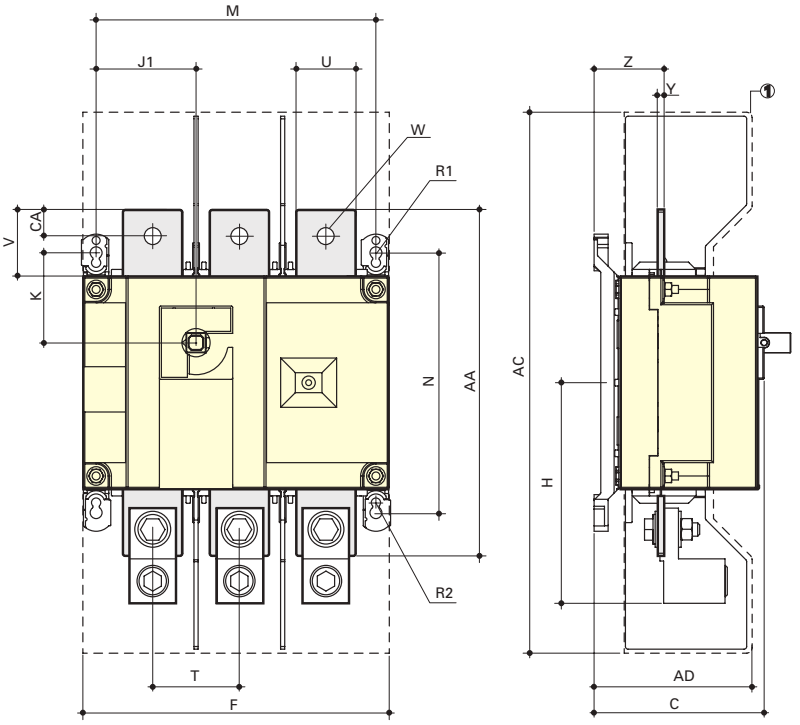


| Switch amps | Overall dim. C | Terminal shrouds AC | Terminal shrouds AD | Switch body F 3p. | Switch body F 4p. | Switch body H | Switch body J1 3p. | Switch body J1 4p. | Switch body K | Switch body M 3p. | Switch body M 4p. | Switch mounting N | Switch mounting R1 | Switch mounting R2 | Switch mounting T | Switch mounting U | Connection V | Connection W | Connection Y | Connection Z | Connection A A | Connection AC |
|---|---|---|---|---|---|---|---|---|---|---|---|---|---|---|---|---|---|---|---|---|---|---|
| 100 | 3.72 (95) | 10.1 (256) | 3.05 (78) | 7.09 (180) | 9.06 (230) | 4.22 (107) | 2.17 (55) | 4.13 (105) | 1.8 (46) | 6.3 (160) | 8.27 (210) | 5.31 (135) | 0.35 (9) | 0.27 (7) | 1.97 (50) | 0.98 (25) | 1.18 (30) | 0.43 (11) | 0.14 (4) | 1.35 (34) | 6.3 (160) | 0.6 (15) |
| 200 | 3.72 (95) | 10.1 (256) | 3.05 (78) | 7.09 (180) | 9.06 (230) | 4.22 (107) | 2.17 (55) | 4.13 (105) | 1.8 (46) | 6.3 (160) | 8.27 (210) | 5.31 (135) | 0.35 (9) | 0.27 (7) | 1.97 (50) | 0.98 (25) | 1.18 (30) | 0.43 (11) | 0.14 (4) | 1.35 (34) | 6.3 (160) | 0.6 (15) |
| 400 | 4.92 (128) | 16 (406) | 4.15 (115) | 9.05 (230) | 11.4 (290) | 6.53 (166) | 2.95 (75) | 5.31 (135) | 2.65 (68) | 8.26 (210) | 10.6 (270) | 7.67 (195) | 0.35 (9) | 0.27 (7) | 2.56 (65) | 1.77 (45) | 1.97 (50) | 0.43 (13) | 0.2 (5) | 2.08 (53) | 10.2 (260) | 0.8 (20) |

### DIR-03 direct mount handle

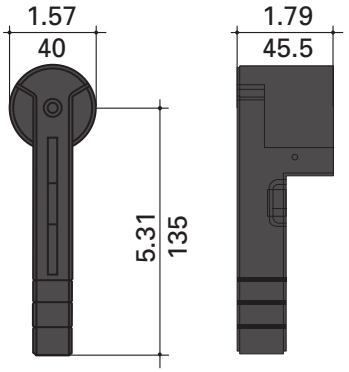


### External front handle

Handle type

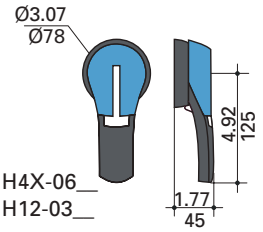


Direction of front operation

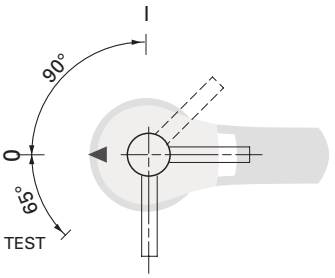


Door drilling layout

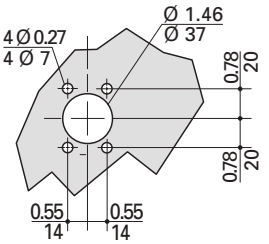


### Terminal lugs

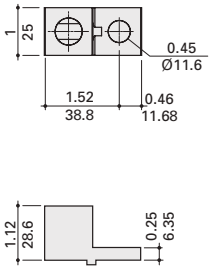


LUG1-_ 100 to 200 A

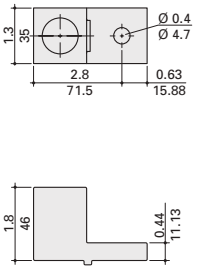


LUG2-_ 400 A

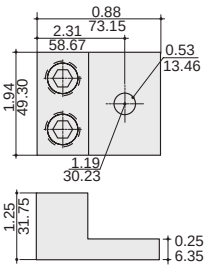


LUG3-_ 400 A

# UL 98 non-fused rotary disconnect switches — 600, 800, 1000 and 1200 A

**For a complete assembly, select:**

Select for standard application

## Switch

| Amps | Poles | SCCR (kA) | Max horsepower rating 3-phase 220/240 | 3-phase 440/480 | 3-phase 600 | DC* 125 | DC* 250 | Catalog no. |
|---|---|---|---|---|---|---|---|---|
| 600 | 3 | 200 | 240 | 400 | 350 | 20 | 50 | RD600-3 |
| | 4 | | 240 | 400 | 350 | 20 | 50 | RD600-4 |
| 800 | 3 | 100 | 200 | 500 | 500 | - | - | RD800-3 |
| | 4 | | 200 | 500 | 500 | - | - | RD800-4 |
| 1000 | 3 | | 200 | 500 | 500 | - | - | RD1000-3 |
| | 4 | | 200 | 500 | 500 | - | - | RD1000-4 |
| 1200 | 3 | | 200 | 500 | 500 | - | - | RD1200-3 |
| | 4 | | 200 | 500 | 500 | - | - | RD1200-4 |

* DC ratings use two poles in series.

+

**Terminal lug kit**

| Switch amps | Poles | Lugs per kit | Lugs required per pole | Conductor AWG size/type | Catalog no. |
|---|---|---|---|---|---|
| 600 | 3 | 3 | 1 | (2) 2-600 kcmil 75°C Cu/ Al | LUG5-3 |
| | 4 | 4 | | | LUG5-4 |
| 800-1200 | 3 | 6 | 2 | (4) 2-600 kcmil 75°C Cu/ Al | LUG6-6 |
| | 4 | 8 | | | LUG6-8 |

**PLUS**

## Handles

Direct mount handle - mounts directly to switch, no shaft required

| For switch cat. no. | Color | Test function | Padlockable | Catalog no. |
|---|---|---|---|---|
| All switches | Black | N | Y | DIR-04 |

**OR**

1 2

**External front operated pistol handles - shaft required**

| NEMA type | Color | Test function | Padlockable | Defeatable | Catalog no. |
|---|---|---|---|---|---|
| 1, 3R, 4, 4X, 12 | Black | N | Y | Y | H4X-07B (1) |
| | Red/yellow | | | | H4X-07R (1) |
| | Black | | | | H4X-08B (2) |
| | Red/yellow | | | | H4X-08R (2) |

3 Or 4

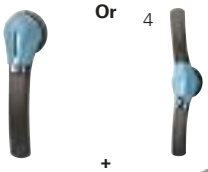

**Metallic hasp (heavy duty) external front operated pistol handles - shaft required**

| NEMA type | Color | Test function | Padlockable | Defeatable | Catalog no. |
|---|---|---|---|---|---|
| 1, 3R, 4, 4X, 1 | Black | N | Y | Y | H4X-07BHD (3) |
| | Red/yellow | | | | H4X-07RHD (3) |
| | Black | | | | H4X-08BHD (4) |
| | Red/yellow | | | | H4X-08RHD (4) |

+

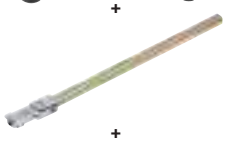

**Shafts for pistol handles**

| Length — in (mm) | Mounting depth (X) — in (mm) | Catalog no. |
|---|---|---|
| 7.9 (200) | 8.70~13.50 (221~343) | SH6-200 |
| 12.6 (320) | 8.70~18.23 (221~463) | SH6-320 |
| 15.7 (400) | 8.70~21.38 (221~543) | SH6-400 |

+

**Shaft guide**

| | Catalog no. |
|---|---|
| Required for 15.7" (400mm) long shafts, optional for other lengths | SH-GUIDE2 |

**AND...**

Accessories

## Aux. contacts

**Auxiliary contacts**

| Contact type | No. of contacts | Continuous amp rating | Voltage (Vac) | Max number of aux contacts per switch | Catalog no. |
|---|---|---|---|---|---|
| NO + NC | 1 of each | 10.1 | 125-250 | 2 | BAC03* |
| NO + NC | 1 of each | | | | BAC04* |
| NO + NC | 1 of each | 1 | 125 | | BAC11* |
| NO + NC | 1 of each | | | | BAC12* |

* For one auxiliary contact, install either BAC03 or BAC11. For two auxiliary contacts, install BAC03 + BAC04, or BAC11 + BAC12.

**AND...**

## Shrouds

Terminal shrouds* — includes terminal shroud for lineside or loadside

| Switch amps | Poles | Location on switch | Catalog no. |
|---|---|---|---|
| 600 | 3 | Lineside or loadside | TSH6-3TB |
| | 4 | | TSH6-4TB |
| 800-1200 | 3 | | TSH7-3TB |
| | 4 | | TSH7-4TB |

* Shroud for lineside included with switch.

## Dimensions — in (mm)

600 A

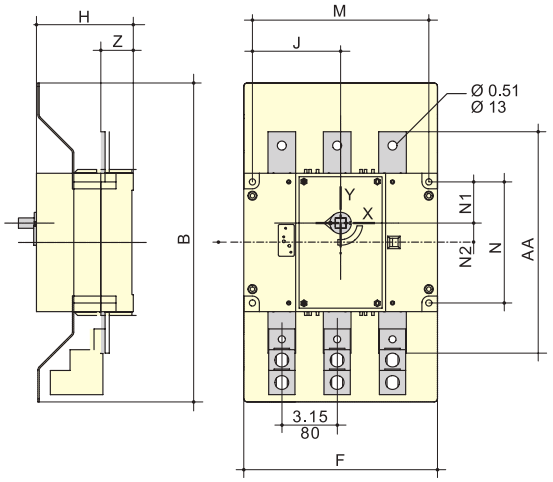


800 to 1200 A

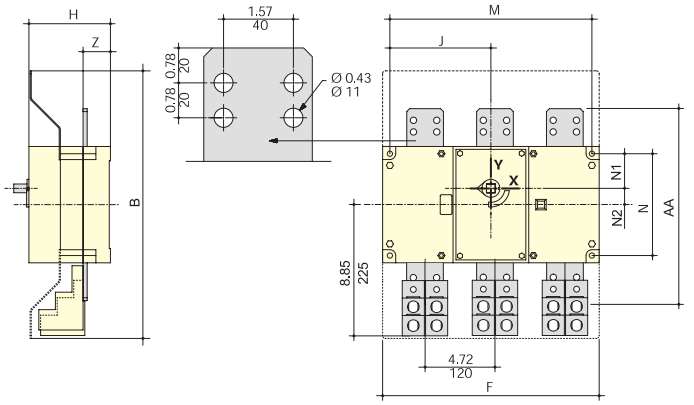


| Switch amps | Terminal shrouds B | Switch body | | | | | | Switch mounting | | | | Connection | |
|---|---|---|---|---|---|---|---|---|---|---|---|---|---|
| | | F 3p. | F 4p. | H | J 3p. | J 4p. | M 3p. | M 4p. | N | N1 | N2 | A A | Z |
| 600 | 18.12 (460) | 11 (280) | 14.17 (360) | 5.5 (140) | 5 (128) | 6.59 (168) | 10.03 (255) | 13.19 (335) | 6.88 (175) | 2.34 (60) | 1.1 (28) | 12.6 (320) | 1.85 (47) |
| 800 | 18.12 (460) | 14.64 (372) | 19.37 (492) | 5.5 (140) | 6.83 (174) | 9.19 (234) | 13.66 (347) | 18.38 (467) | 6.88 (175) | 2.34 (60) | 1.1 (28) | 13 (330) | 1.85 (47) |
| 1000 | 18.12 (460) | 14.64 (372) | 19.37 (492) | 5.5 (140) | 6.83 (174) | 9.19 (234) | 13.66 (347) | 18.38 (467) | 6.88 (175) | 2.34 (60) | 1.1 (28) | 13 (330) | 1.85 (47) |
| 1200 | 18.12 (460) | 14.64 (372) | 19.37 (492) | 5.5 (140) | 6.83 (174) | 9.19 (234) | 13.66 (347) | 18.38 (467) | 6.88 (175) | 2.34 (60) | 1.1 (28) | 13 (330) | 1.85 (47) |

DIR-04 Direct mount handle

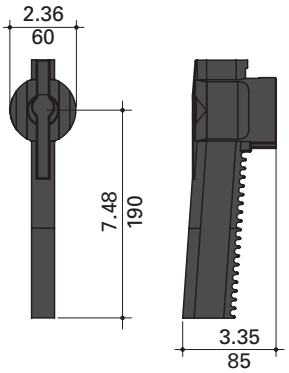


Terminal lugs

External front pistol handles

Handle Type

Direction of Front Operation

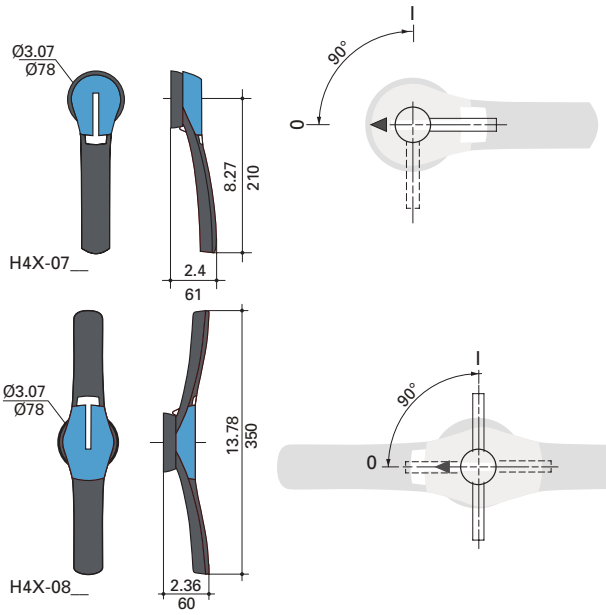


Door drilling layout

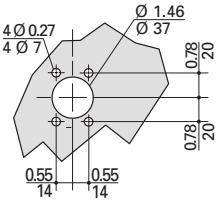


LUG5-__, LUG6-__ 600 to 1200 A

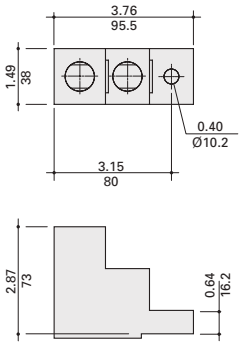

# UL 508 non-fused rotary disconnect switches — 16 to 80 A

Eaton UL 508 load break disconnect switches allow safe control and safe disconnection of any motor application or to isolate a circuit within the panel.

These disconnect switches are compact and offer a wide variety of accessories like 4th poles, Auxiliary contacts, door mounting and 6/8-Pole kits.

## Features

- Suitable for motor disconnect
- DIN-Rail or panel mount
- Door mount option
- Disconnect switches are front, right side or direct handle operable
- Finger-safe

## Agency information

- UL 508, Guide NLRV, File E155129
- CSA C22.2 No. 14, File 257020
- Conforms with IEC 60947-3

## Online resources

Visit Eaton.com/bussmannseries for:

- CAD drawings
- Instruction sheets
- UL information

## Related Bussmann series products

| Fuse blocks |
|---|
| Modular Class H(K), J and RK fuse blocks up to 600 A |
| Modular Class H(K), J and RK power distribution fuse blocks up to 400 A |
| Modular, finger-safe CH Class CC and J, and UL supplemental and IEC 10x38mm DIN-Rail holders up to 60 A |
| Finger-safe Optima Class CC, UL supplemental and IEC 10x38mm DIN-Rail/panel mount holders up to 30 A |
| Finger-safe Optima™ Class CC, UL supplemental and IEC 10x38mm DIN-Rail/panel mount protection modules up to 30 A |

## IEC specifications

RD16-3-508

RD16-3-508 with 6-pole conversion kit

| Catalog no. | | RD16-3-508 | RD25-3-508 | RD40-3-508 | RD63-3-508 | RD80-3-508 |
|---|---|---|---|---|---|---|
| Thermal current $I_{th}$ at 40°C (A) | | 16 | 25 | 40 | 63 | 80 |
| Rated insulation voltage $U_i$ (V) | | 800 | 800 | 800 | 800 | 800 |
| Rated impulse withstand voltage $U_{imp}$ (kV) | | 8 | 8 | 8 | 8 | 8 |
| **Rated operation currents Ie (A)** | | | | | | |
| Load duty category | Rated voltage | A/B [1] | A/B [1] | A/B [1] | A/B [1] | A/B [1] |
| 500 | AC-22 A/ AC-22 B | 16/16 | 25/25 | 40/40 | 63/63 | 80/80 |
| | AC-23A/ AC-23 B | 16/16 | 25/25 | 25/25 | 63/63 | 63/63 |
| 690 | AC-21 A/ AC-21 B | 16/16 | 25/25 | 40/40 | 63/63 | 80/80 |
| | AC-22 A/ AC-22 B | 16/16 | 25/25 | 32/40 | 40/63 | 63/80 |
| | AC-23A/ AC-23 B | 16/16 | 25/25 | 25/25 | 40/40 | 40/40 |
| **Operational power in AC-23 (kW)** | | | | | | |
| 400 Vac without prebreak AC [1, 2] | | 7.5 | 11 | 18.5 | 30 | 37 |
| 500 Vac without prebreak AC [1, 2] | | 7.5 | 11 | 15 | 30 | 37 |
| 690 Vac without prebreak AC [1, 2] | | 7.5 | 15 | 18.5 | 30 | 37 |
| **Overload capacity ($U_e$ 415 Vac)** | | | | | | |
| Rated short-time withstand current 0.3 s. ICW (kA RMS) [3] | | 2.5 | 2.5 | 2.5 | 3 | 3 |
| Rated short-time making capacity $I_{cm}$ (kA peak) [3] | | 6 | 6 | 6 | 9 | 9 |
| **Fuse protected short-circuit withstand (kA RMS prospective)** | | | | | | |
| Prospective short-circuit current (kA RMS) [3] | | 50 | 50 | 50 | 50 | 50 |
| Associated fuse rating (A) [3] | | 16 | 25 | 40 | 63 | 80 |
| **Connection** | | | | | | |
| Minimum Cu cable cross section (mm²) | | 1.5 | 1.5 | 1.5 | 2.5 | 2.5 |
| Maximum Cu cable section (mm²) | | 16 | 16 | 16 | 35 | 35 |
| Tightening torque min/max (N•m) | | 2/2.2 | 2/2.2 | 2/2.2 | 3.5/3.85 | 3.5/3.85 |

1 A/B: Category with index A = frequent operation; category with index B = infrequent operation.
2 The power value is given for information only; the current values vary from one manufacturer to another.
3 For a rated operating voltage, $U_e$ = 400 Vac.

## UL specifications

RD16-3-508

RD16-3-508 with 6-pole conversion kit

| Catalog no. | | RD16-3-508 | RD25-3-508 | RD40-3-508 | RD63-3-508 | RD80-3-508 |
|---|---|---|---|---|---|---|
| UL standard | | UL 508 | UL 508 | UL 508 | UL 508 | UL 508 |
| Max ampacity | | 16 A | 25 A | 40 A | 63 A | 80 A |
| Handle operation | | Front/Side | Front/Side | Front/Side | Front/Side | Front/Side |
| **UL ratings** | | | | | | |
| Max voltage (AC) | | 600 Vac | 600 Vac | 600 Vac | 600 Vac | 600 Vac |
| Max. Hp ratings | 3-phase, 208 | 3 | 7.5 | 7.5 | 15 | 15 |
| | 3-phase, 240 | 5 | 7.5 | 7.5 | 20 | 20 |
| | 3-phase, 480 | 10 | 15 | 20 | 40 | 40 |
| | 3-phase, 600 | 10 | 20 | 25 | 40 | 40 |
| **Electrical characteristics** | | | | | | |
| SCCR with fuse (kA) | | 65 | 65 | 10/65 | 50/65 | 50/65 |
| Recommended upstream | Fuse class | J | J | J | J | J |
| | Max. fuse rating (A) | 30 | 30 | 60/30 | 100/60 | 100/60 |
| Terminals | | Integral | Integral | Integral | Integral | Integral |
| Wire type | | 75°C Cu | 75°C Cu | 75°C Cu | 75°C Cu | 75°C Cu |
| Wire range and torque - lb-in (N•m) | Solid single | 14-10, 26.5 (3) | 14-10, 26.5 (3) | 14-10, 26.5 (3) | 14-10, 31.1 (3.5) | 14-10, 31.1 (3.5) |
| | Solid dual | 12, 26.5 (3) | 12, 26.5 (3) | 12, 26.5 (3) | 12, 31.1 (3.5) | 12, 31.1 (3.5) |
| | Stranded single | 14-4, 26.5 (3) | 14-4, 26.5 (3) | 14-4 , 26.5 (3) | 14-1, 31.1 (3.5) | 14-1, 31.1 (3.5) |
| | Stranded dual | 14-12, 26.5 (3) | 14-12, 26.5 (3) | 14-12, 26.5 (3) | 10-6, 31.1 (3.5) | 10-6, 31.1 (3.5) |
| **Mechanical characteristics** | | | | | | |
| Endurances/cycles | | 10,000 | 10,000 | 10,000 | 10,000 | 10,000 |
| **Physical characteristics** | | | | | | |
| Dimensions | | See drawings on product pages | | | | |
| Weight- lb (kg) | | 0.5 (0.2) | 0.5 (0.2) | 0.5 (0.2) | 0.7 (0.32) | 0.7 (0.32) |
| **Environmental** | | | | | | |
| Operating temperature | | -20 to 70°C | -20 to 70°C | -20 to 70°C | -20 to 70°C | -20 to 70°C |
| Flammability rating | | UL 94-V0 | UL 94-V0 | UL 94-V0 | UL 94-V0 | UL 94-V0 |
| **Accessories** | | | | | | |
| Handles | Direct | DIR-01 | DIR-01 | DIR-01 | DIR-01 | DIR-01 |
| | Short selector/NEMA 1, 3R, 4, 4X, 12 | H4X-01B | H4X-01B | H4X-01B | H4X-01B | H4X-01B |
| | | H4X-01R | H4X-01R | H4X-01R | H4X-01R | H4X-01R |
| | Long selector/NEMA 1, 3R, 4, 4X, 12 | H4X-02B | H4X-02B | H4X-02B | H4X-02B | H4X-02B |
| | | H4X-02R | H4X-02R | H4X-02R | H4X-02R | H4X-02R |
| | Pistol handle/NEMA 1, 3R, 4, 4X, 12 | H4X-03B | H4X-03B | H4X-03B | H4X-03B | H4X-03B |
| | | H4X-03R | H4X-03R | H4X-03R | H4X-03R | H4X-03R |
| | Metallic hasp (HD) pistol handle/ NEMA 1, 3R, 4, 4X, 12 | H4X-03BHD | H4X-03BHD | H4X-03BHD | H4X-03BHD | H4X-03BHD |
| | | H4X-03RHD | H4X-03RHD | H4X-03RHD | H4X-03RHD | H4X-03RHD |
| Selector handle shafts - 5x5mm | 5.9"/150mm | SH4-150 | SH4-150 | SH4-150 | SH4-150 | SH4-150 |
| | 7.9"/200mm | SH4-200 | SH4-200 | SH4-200 | SH4-200 | SH4-200 |
| | 12.6"/320mm | SH4-320 | SH4-320 | SH4-320 | SH4-320 | SH4-320 |
| Pistol handle shafts - 5x5mm | 7.9"/200mm | SH3-200 | SH3-200 | SH3-200 | SH3-200 | SH3-200 |
| | 12.6"/320mm | SH3-320 | SH3-320 | SH3-320 | SH3-320 | SH3-320 |
| | 15.75"/400mm | SH3-400 | SH3-400 | SH3-400 | SH3-400 | SH3-400 |
| Selector handle shaft guide | | SH-GUIDE1 | SH-GUIDE1 | SH-GUIDE1 | SH-GUIDE1 | SH-GUIDE1 |
| Pistol handle shaft guide | | SH-GUIDE2 | SH-GUIDE2 | SH-GUIDE2 | SH-GUIDE2 | SH-GUIDE2 |
| Door mount kit | | DOOR-508 | DOOR-508 | DOOR-508 | DOOR-508 | DOOR-508 |
| Shrouds/switch amps | 1-Pole | TSH1-1TB | TSH1-1TB | TSH1-1TB | — | — |
| | 3-Pole (loadside and lineside) | TSH1-3TB | TSH1-3TB | TSH1-3TB | TSH2-3TB | TSH2-3TB |
| | Switched 4th pole/switch amps | POLE-16 | POLE-25 | POLE-40 | — | — |
| | Ground module (conforms to IEC 60947-3) | GND-16-40 | GND-16-40 | GND-16-40 | GND-63-80 | GND-63-80 |
| | Neutral module (conforms to IEC 60947-3) | NTRL-16-40 | NTRL-16-40 | NTRL-16-40 | NTRL-63-80 | NTRL-63-80 |
| Auxiliary contacts | NO + NC (1 ea.) | BAC01 | BAC01 | BAC01 | BAC01 | BAC01 |
| | (2) NO | BAC02 | BAC02 | BAC02 | BAC02 | BAC02 |
| | AC ratings | | | | | |
| | Volts | 240 Vac | 240 Vac | 240 Vac | 240 Vac | 240 Vac |
| | Amps | 10 | 10 | 10 | 10 | 10 |
| 6-/8-pole conversion kit gangs two switches of same rating, 16-80 A switch amps | | KIT-6POLE | KIT-6POLE | KIT-6POLE | KIT-6POLE | KIT-6POLE |

— Not available.

## UL 508 non-fused rotary disconnect switches —16, 25, 40, 63 and 80 A

**For a complete assembly, select:**

Select for standard application

### Switch

| Amps | Poles | SCCR @600V (kA) | Max. Class J fuse amps | Max horsepower rating, 3-Phase 208 | 220/240 | 440/480 | 600 | Conductor AWG size/ type | Catalog no. |
|---|---|---|---|---|---|---|---|---|---|
| 16 | 3 | 65 | 30 | 3 | 5 | 10 | 10 | 14-10 Sol, Dual 12 Sol, 14-4 Str, Dual 14-12 Str, 75°C Cu | RD16-3-508 |
| 25 | | | | 7.5 | 7.5 | 15 | 20 | | RD25-3-508 |
| 40 | | 10 | 60 | 7.5 | 7.5 | 20 | 25 | | RD40-3-508 |
| | | 65 | 30 | | | | | | |
| 63 | | 50 | 100 | 15 | 20 | 40 | 40 | 14-10 Sol, Dual 12 Sol, 14-1 Str, Dual 10-6 Str, 75°C Cu | RD63-3-508 |
| | | 65 | 60 | | | | | | |
| 80 | | 50 | 100 | 15 | 20 | 40 | 40 | | RD80-3-508 |
| | | 65 | 60 | | | | | | |

**PLUS**

### Handles

**Direct mount handle - mounts directly to switch, no shaft required**

| For switch cat. no. | Color | Test function | Padlockable | Catalog no. |
|---|---|---|---|---|
| All switches | Black | N | Y - On Switch | DIR-01 |

**OR**

**External front or right side operated selector handles - shaft required**

| NEMA type | Color | Handle length | Test function | Padlockable | Catalog no. |
|---|---|---|---|---|---|
| 1, 3R, 4, 4X, 12 | Black | Short | N | Y | H4X-01B (1) |
| | Red/yellow | | | | H4X-01R (1) |
| | Black | Long | | | H4X-02B (2) |
| | Red/yellow | | | | H4X-02R (2) |

**Or**

**External front operated pistol handles - shaft required**

| NEMA type | Color | Handle length | Test function | Padlockable | Defeatable | Catalog no. |
|---|---|---|---|---|---|---|
| 1, 3R, 4, 4X, 12 | Black | — | N | Y | Y | H4X-03B |
| | Red/yellow | | | | | H4X-03R |

Metallic hasp (heavy duty) external front operated pistol handles - shaft required

| NEMA type | Color | Handle length | Test function | Padlockable | Defeatable | Catalog no. |
|---|---|---|---|---|---|---|
| 1, 3R, 4, 4X, 12 | Black | — | N | Y | Y | H4X-03BHD |
| | Red/yellow | | | | | H4X-03RHD |

**+**

**Shafts for selector handles**

| Length — in (mm) | Mounting depth (X) - in (mm) | Catalog no. |
|---|---|---|
| 5.9 (150) | 3.50~7.60 (89~193) | SH4-150 (1) |
| 7.9 (200) | 3.50~9.50 (89~241) | SH4-200 (1) |
| 12.6 (320) | 3.50~14.9 (89~378) | SH4-320 (1) |

**Shafts for pistol handles**

| Length — in (mm) | Mounting depth (X) - in (mm) | Catalog no. |
|---|---|---|
| 7.9 (200) | 3.30~7.40 (84~188) | SH3-200 (2) |
| 12.6 (320) | 3.30~9.30 (84~236) | SH3-320 (2) |
| 15.7 (400) | 3.30~14.7 (84~373) | SH3-400 (2) |

**+**

**Shaft guides for selector and pistol handles**

| Handle type | | Catalog no. |
|---|---|---|
| Selector | Required for 12.6" (320mm) long shafts, optional for other lengths | SH-GUIDE1 |
| Pistol | Required for 15.7" (400mm) long shafts, optional for other lengths | SH-GUIDE2 |

**+**

**Door mount kit**

For mounting switch on the right side of the enclosure or directly on the enclosure door using switch side operation shaft location. Kit includes a shaft. Order switch and selector handle separately.

| Switch | Catalog no. |
|---|---|
| All switches - kit includes shaft | DOOR-508 |

**AND...**

Disconnect switches

**Accessories**

**Aux. Contacts**

**Auxiliary contacts**

| Contact type | No. of contacts | Continuous amp rating | Voltage (Vac) rating | Max number of units per switch | Catalog no. |
|---|---|---|---|---|---|
| NO + NC | 1 Ea. | 10 | 240 | 2 (1 per side/4 contacts total) | BAC01 |
| NO | 2 | | | | BAC02 |

**AND...**

**Shrouds**

**Terminal shrouds - includes terminal shroud for both lineside and loadside**

| Switch amps | Poles | Location on switch | Catalog no. |
|---|---|---|---|
| 16-40 | 1 (for switched 4th pole) | Lineside and loadside | TSH1-1TB |
| 16-40 | 3 | | TSH1-3TB |
| 63-80 | | | TSH2-3TB |

**AND...**

**4th pole**

**Switched 4th pole - converts 3-pole switch to 4-pole switch**

| Switch amps | Catalog no. |
|---|---|
| 16 | POLE-16 |
| 25 | POLE-25 |
| 40 | POLE-40 |

**AND...**

**Gnd./neut. mods**

**Ground and Neutral Modules - provides unswitched ground or neutral pole - conforms to IEC 60947-3**

| Switch amps | Module Type | Catalog no. |
|---|---|---|
| 16-40 | Ground | GND-16-40 |
| 63-80 | | GND-63-80 |
| 16-40 | Neutral | NTRL-16-40 |
| 63-80 | | NTRL-63-80 |

**AND...**

**6 pole kit**

Order switches separately

6-pole conversion kit - creates a 6-pole switch by ganging two 3-pole switches of equal rating

| Switch amps | Catalog no. |
|---|---|
| All switches | KIT-6POLE* |

* Kit ships with a direct handle. If external handle is needed order a selector handle and shaft for the UL 508 Rotary Disconnect Switches.

Note: To create an 8-pole switch from 16 to 40 amp switches, use two 3-pole switches of equal ratings plus two switched 4th poles (part # POLE-_).

Auxiliary contact configurations

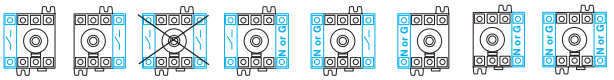

Ground and neutral module, and switched 4th pole configurations.

## Dimensions — in (mm)

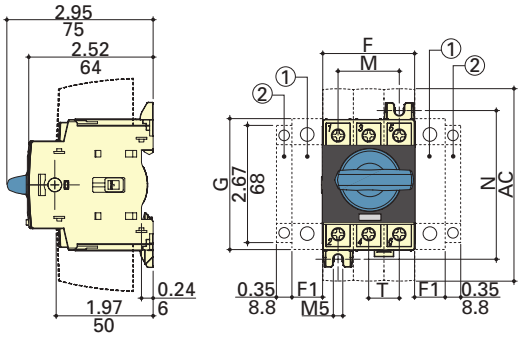


Direct handle operation

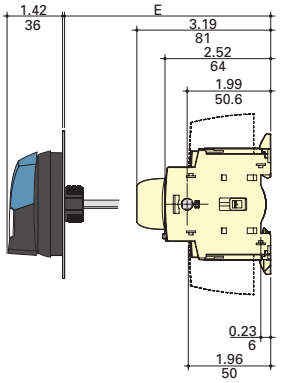


External front operation

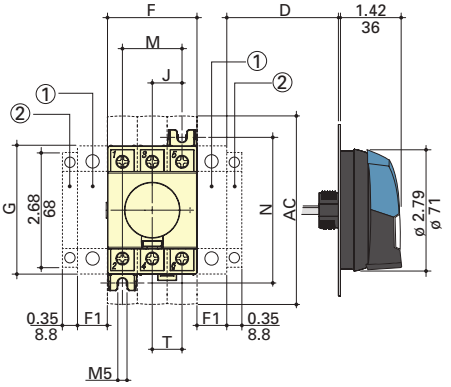


External side operation

1. Position for 1 switched 4th pole (1 per device max.), or ground or neutral module (2 per device max.) or 1 auxiliary contact.
2. Position for 1 auxiliary contact only.

Note: Maximum of 4 Auxiliary contacts, or 3 Auxiliary contacts + one ground or neutral module, or one switched 4th pole.

| Switch amps | Overall dimensions | | | | Terminal shroud AC | Switch body | | | Switch mounting | | | Connection T |
|---|---|---|---|---|---|---|---|---|---|---|---|---|
| | D min | D max | E min | E max | | F | F1 | G | J | M | N | |
| 16 to 40 | 1.18 (30) | 9.25 (235) | 3.94 (100) | 14.64 (372) | 4.33 (110) | 1.77 (45) | 0.59 (15) | 2.67 (68) | 0.59 (15) | 1.18 (30) | 2.95 (75) | 0.59 (15) |
| 63 to 80 | 1.18 (30) | 9.25 (235) | 3.93 (100) | 14.64 (372) | 4.33 (110) | 2.06 (53) | 0.69 (18) | 2.99 (76) | 0.69 (18) | 1.38 (35) | 3.35 (85) | 0.69 (18) |

## Dimensions — in (mm)

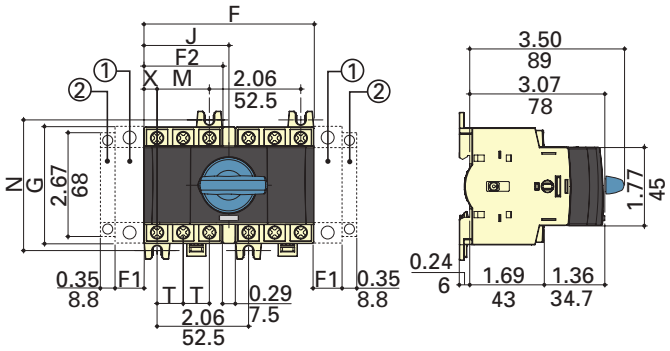


Direct front operation for 6/8-pole disconnects

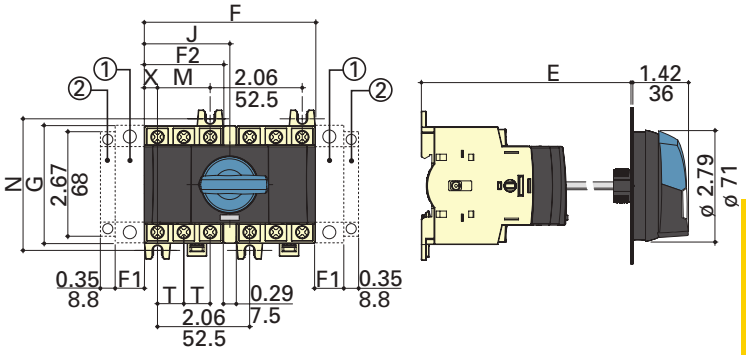


External front operation for 6/8-pole disconnects

1. Position for 1 switched 4th pole (1 per device max.) or 1 auxiliary contact.
2. Position for 1 auxiliary contact only.
Note: Maximum of 4 auxiliary contacts, or 3 auxiliary contacts + one switched 4th pole.

| Switch amps | Overall dimensions | | | | Switch body | | | Switch mounting | | Connection | |
|---|---|---|---|---|---|---|---|---|---|---|---|
| | E min | E max | F | F1 | F2 | G | J | M | N | T | X |
| 16 to 40 | 4.13 (105) | 14.64 (372) | 3.83 (98) | 0.59 (15) | 1.77 (45) | 2.67 (68) | 1.92 (48.75) | 1.18 (30) | 2.95 (75) | 0.59 (15) | 0.29 (8) |
| 63 to 80 | 4.13 (105) | 14.65 (372) | 4.13 (105) | 0.69 (18) | 2.06 (53) | 2.99 (76) | 2.06 (52.5) | 1.38 (35) | 3.35 (85) | 0.69 (18) | 0.34 (9) |

## External selector and pistol handles

Handle type

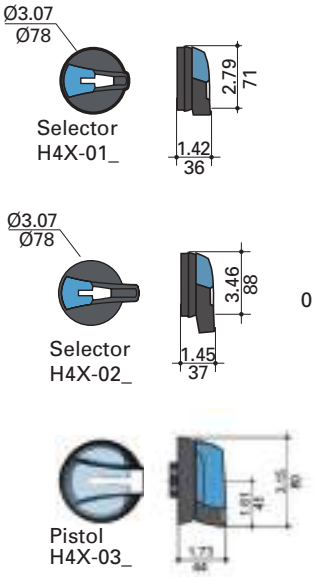


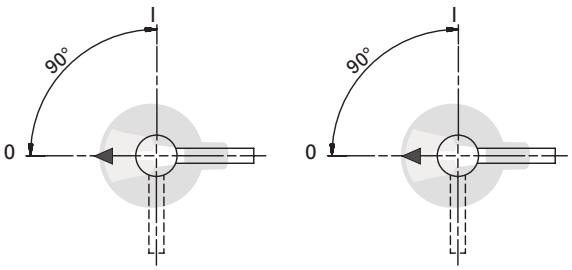


Door drilling layouts

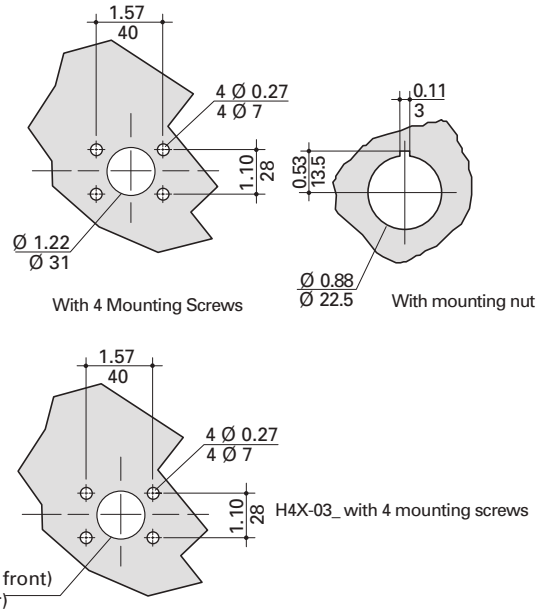

## UL 98 and UL 508 enclosed disconnect switches

Enclosed fused and non-fused rotary disconnect switches from 16 to 1200 A in NEMA 1, 3R, 4, 4X, 12 enclosures.

### Ratings

RoHS 2011/65/EU

- Volts
  - 600 Vac
  - 250-600 Vdc*
- Amps 16-1200 A
- SCCR
  - UL 98 25-200 kA
  - UL 508 10-65 kA

* Some non-fused disconnect switches are not rated for DC applications.

### Agency information

- UL 98 Listed, Guide WIAX, WIAX7, File E182262
- UL 508 Listed, Guide NLRV, NLRV, File E155129
- cULus Listed to Canadian Standard 22.2, No. 14
- cULus Listed to Canadian Standard 22.2, No. 4
- Conforms with IEC 60947-3
- RoHS compliant
- CE

### Operating temperature

- -20°C to 70°C

### 4X plastic enclosure flammability ratings

- Polycarbonate UL 94-5V A-0
- Fiberglass UL 94-5V

### Field installed accessories

- Auxiliary contacts
- Terminal shrouds
- Switched 4th pole (UL 508 only)

### Online resources

Visit Eaton.com/bussmannseries for:

- CAD drawings
- Instruction sheets
- UL information

### Features

- UL 98 Listed for general purpose, main disconnect, or branch circuit protection up to 600 Vac/dc
- UL 508 Listed for motor disconnect applications up to 600 Vac
- Multiple field installed accessories enhance the enclosed disconnect switches to fit the desired application
- Lockout/tagout: Up to three 1/4" shank padlocks can be installed on external handles

NEMA 1, 3R, 4 and 12

NEMA 4X 304 stainless steel

NEMA 4X polycarbonate or fiberglass

## UL 98 enclosed fused disconnects — 30 to 800 A

### 3-pole UL 98 600 Vac

Catalog number system:

ER 4X - 60 J 3 P B

**ER**

Enclosed Rotary disconnect

**NEMA rating**

1, 3R, 4, 4X (304 SST), 4P (4X Plastic), 12

**Amp rating**

30, 60, 100, 200, 400, 600, 800

**Fuse class**

J = Class J, L = Class L

**Number of poles**

3 = 3-pole

**Handle type**

P = Pistol

**Handle color**

B = Black, R = Red

NEMA 1, 3R, 4 and 12

NEMA 4X
304 stainless steel

NEMA 4X

**30-800A UL 98 fused switches**

### Available Bussmann series fuses

| Fuse class | Catalog symbol/type |
|---|---|
| J | LPJ time-delay, current limiting |
| | JKS fast-acting fuses |
| | DFJ high speed drive fuse |
| L | KRP-C time-delay, current limiting |
| | KTU fast-acting |
| | KLU time-delay |
| | KRP-CL (225-600 A) |

### Catalog numbers

All catalog numbers provided with integral or installed lugs and a black selector handle. Order Red/yellow handle by changing the suffix "B" to "R."

| | | NEMA enclosure type and catalog no. | | | | | |
|---|---|---|---|---|---|---|---|
| Switch amps | Fuse class | 1 | 3R | 4 | 4X plastic[1] | 4X 304 stainless | 12 |
| 30 | J | ER1-30J3PB | ER3R-30J3PB | ER4-30J3PB | ER4P-30J3PB | ER4X-30J3PB | ER12-30J3PB |
| 60 | | ER1-60J3PB | ER3R-60J3PB | ER4-60J3PB | ER4P-60J3PB | ER4X-60J3PB | ER12-60J3PB |
| 100 | | ER1-100J3PB | ER3R-100J3PB | ER4-100J3PB | ER4P-100J3PB | ER4X-100J3PB | ER12-100J3PB |
| 200 | | ER1-200J3PB | ER3R-200J3PB | ER4-200J3PB | ER4P-200J3PB | ER4X-200J3PB | ER12-200J3PB |
| 400 | | ER1-400J3PB | ER3R-400J3PB | ER4-400J3PB | ER4P-400J3PB | ER4X-400J3PB | ER12-400J3PB |
| 600 | | ER1-600J3PB | ER3R-600J3PB | ER4-600J3PB | ER4P-600J3PB | ER4X-600J3PB | ER12-600J3PB |
| 800 | L | ER1-800L3PB | ER3R-800L3PB | ER4-800L3PB | ER4P-800L3PB | ER4X-800L3PB | ER12-800L3PB |

1 Enclosures ≤100 A are polycarbonate, flammability rating UL 94-5V A-V0, ≥200 A are fiberglass, flammability rating UL 94-5V.

### Switch ratings

For wire types, ranges and terminal torques, see table on page 11-35.

| | | | | Voltage | | | |
|---|---|---|---|---|---|---|---|
| Switch amps | Switch cat. no. | Fuse class | Poles | Vac | Vdc | SCCR @ Vac (kA) | Max. Hp @ 600 Vac |
| 30 | RDF30J-3 | J | 3 | 600 | 250 | 200 | 20 |
| 60 | RDF60J-3 | | | | | | 50 |
| 100 | RDF100J-3 | | | | | | 75 |
| 200 | RDF200J-3 | | | | N/A | | 150 |
| 400 | RDF400J-3 | | | | 250 | | 350 |
| 600 | RDF600J-3 | | | | 600 | | 500 |
| 800 | RDF800L-3 | L | | | | | |

## UL 98 enclosed fused disconnects — 30 to 800 A

### Enclosure weights and dimensions

| Catalog no. family | Amps | Fuse class | NEMA enclosure | H x W x D (in) | Mounting centers h x w (in) A | B | C | Weight (lbs) |
|---|---|---|---|---|---|---|---|---|
| ER_-30J | 30 | J | 1, 3R, 4, 12 | 10x10x6 | 8.3x8.3 | — | — | 15 |
| | | | 4X-SST | | — | 10.7x8.3 | 8.3x10.7 | |
| | | | 4X-plastic [1] | 12x10x6 | — | 12x5.6 | 7.6x10 | 8 |
| ER_-60J | 60 | | 1, 3R, 4, 12 | | 10.3x8.3 | — | — | 19 |
| | | | 4X-SST | | — | 12.7x8.3 | 8.3x10.7 | |
| | | | 4X-plastic [1] | 13x13x6 | — | 14x7.6 | 9.6x12 | 11 |
| ER_-100J | 100 | | 1, 3R, 4, 12 | 14x12x6 | 12.3x10.3 | — | — | 21 |
| | | | 4X-SST | | — | 14.7x10.3 | 12.3x12.7 | |
| | | | 4X-plastic [1] | 13x13x6 | — | 14x7.6 | 9.6x12 | 12 |
| ER_-200J | 200 | | 1, 3R, 4, 12 | 24x20x8 | 22.3x18.3 | — | — | 55 |
| | | | 4X-SST | | — | 24.7x18.3 | 22.3x20.7 | |
| | | | 4X-plastic [1] | 27x21x10 | — | 25.75x14 | — | 39 |
| ER_-400J | 400 | | 1, 3R, 4, 12 | 48x36x12 | 46.3x34.3 | — | — | 188 |
| | | | 4X-SST | | — | 48.7x34.3 | 46.3x36.7 | |
| | | | 4X-plastic [1] | 51x37x14 | — | 50x28.5 | — | 186 |
| ER_-600J | 600 | | 1, 3R, 4, 12 | 48x36x12 | 46.3x34.3 | — | — | 216 |
| | | | 4X-SST | | — | 48.7x34.3 | 46.3x36.7 | |
| | | | 4X-plastic [1] | 51x37x14 | — | 50x28.5 | — | 214 |
| ER_-800L | 800 | L | 1, 3R, 4, 12 | 48x36x12 | 46.3x34.3 | — | — | 216 |
| | | | 4X-SST | | — | 48.7x34.3 | 46.3x36.7 | |
| | | | 4X-plastic [1] | 51x37x14 | — | 50x28.5 | — | 214 |

1 Enclosures ≤100 A are polycarbonate, flammability rating UL 94-5V A-V0, ≥200 A are fiberglass, flammability rating UL 94-5V.

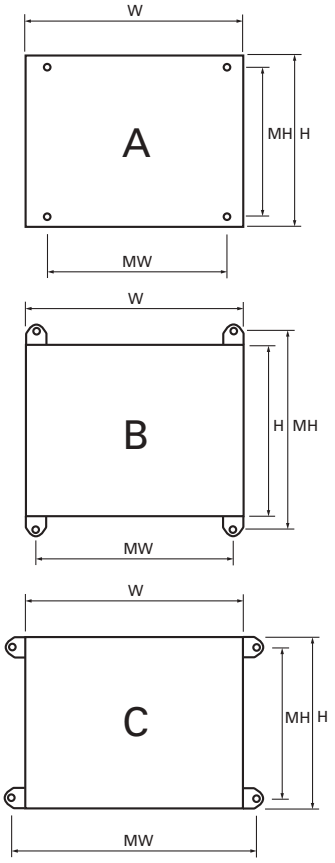


### Available field-Installed accessories - order separately

### Auxiliary contacts - for 30 to 800 amp switches

| Contact type | No. of contacts | Cont. amp rating | Vac | Max. units per switch | Catalog no. |
|---|---|---|---|---|---|
| NO | 1 | 10 | 600 | 4 (30 to 200 A) | BAC05 |
| NC | | | | 8 (400 to 800 A) | BAC06 |

### Terminal shrouds

For 200 to 800 amp switches - includes terminal shroud for lineside or loadside

| Switch amps | Poles | Catalog no. |
|---|---|---|
| 200 | 3 | TSH8-3TB |
| 400 | | TSH9-3TB |
| 600-800 | | TSH10-3TB |

## UL 98 enclosed non-fused disconnects — 30 to 1200 A

### 3-pole UL 98 600 Vac

Catalog number system:

**ER 4X - 60 N 3 P B**

**ER**

Enclosed Rotary disconnect

**NEMA rating**

1, 3R, 4, 4X (304 SST), 4P (4X Plastic), 12

**Amp rating**

30, 60, 100, 200, 400, 600, 800, 1200

**N = non-fused**

**Number of poles**

3 = 3-pole

**Handle type**

P = Pistol

**Handle color**

B = Black, R = Red

NEMA 1, 3R, 4 and 12

NEMA 4X
304 stainless steel

NEMA 4X

**200-1200A UL 98 non-fused switches**

NEMA 1, 3R, 4 and 12

NEMA 4X
304 stainless steel

NEMA 4X

**30-800A UL 98 non-fused switches**

### Catalog numbers

All Catalog numbers provided with integral or installed lugs and a black selector handle. Order Red/yellow handle by changing the suffix "B" to "R."

| Amps | NEMA enclosure type and catalog no. | | | | | |
|---|---|---|---|---|---|---|
| | 1 | 3R | 4 | 4X plastic [1] | 4X 304 stainless | 12 |
| 30 | ER1-30N3PB | ER3R-30N3PB | ER4-30N3PB | ER4P-30N3PB | ER4X-30N3PB | ER12-30N3PB |
| 60 | ER1-60N3PB | ER3R-60N3PB | ER4-60N3PB | ER4P-60N3PB | ER4X-60N3PB | ER12-60N3PB |
| 100 | ER1-100N3PB | ER3R-100N3PB | ER4-100N3PB | ER4P-100N3PB | ER4X-100N3PB | ER12-100N3PB |
| 200 | ER1-200N3PB | ER3R-200N3PB | ER4-200N3PB | ER4P-200N3PB | ER4X-200N3PB | ER12-200N3PB |
| 400 | ER1-400N3PB | ER3R-400N3PB | ER4-400N3PB | ER4P-400N3PB | ER4X-400N3PB | ER12-400N3PB |
| 600 | ER1-600N3PB | ER3R-600N3PB | ER4-600N3PB | ER4P-600N3PB | ER4X-600N3PB | ER12-600N3PB |
| 800 | ER1-800N3PB | ER3R-800N3PB | ER4-800N3PB | ER4P-800N3PB | ER4X-800N3PB | ER12-800N3PB |
| 1200 | ER1-1200N3PB | ER3R-1200N3PB | ER4-1200N3PB | N/ A | ER4X-1200N3PB | ER12-1200N3PB |

1 Enclosures ≤100 A are polycarbonate, flammability rating UL 94-5V A-V0, ≥200 A are fiberglass, flammability rating UL 94-5V.

### Switch ratings

For wire types, ranges and terminal torques, see table on page 11-52.

| Amps | Switch catalog no. | Poles | Vac | SCCR (kA) | Max. Hp @ 600 Vac |
|---|---|---|---|---|---|
| 30 | RD30-3 | 3 | 600 | 100 | 25 |
| 60 | RD60-3 | | | | 50 |
| 100 | RD100-3 | | | 25/100* | |
| 200 | RD200-3 | | | 200 | 200 |
| 400 | RD400-3 | | | | 350 |
| 600 | RD600-3 | | | | |
| 800 | RD800-3 | | | 100 | 500 |
| 1200 | RD1200-3 | | | | |

* 25 kA @ 600 Vac, 100 kA @ 480 Vac.

## UL 98 enclosed non-fused disconnects — 30 to 1200 A

### Enclosure weights and dimensions

| Catalog no. family | Amps | NEMA enclosure | H x W x D (in) | Mounting centers h x w (in) A | B | C | Weight (lbs) |
|---|---|---|---|---|---|---|---|
| ER_-30 | 30 | 1, 3R, 4, 12 | 10x8x6 | 8.3x6.3 | — | — | 11 |
| | | 4X-SST | | — | 10.7x6.3 | 8.3x8.7 | 11 |
| | | 4X-plastic (1) | 9x9x6 | — | 10x3.6 | 5.6x8 | 5 |
| ER_-60 | 60 | 1, 3R, 4, 12 | 10x8x6 | 8.3x6.3 | — | — | 12 |
| | | 4X-SST | | — | 10.7x6.3 | 8.3x8.7 | 12 |
| | | 4X-plastic (1) | 9x9x6 | — | 10x3.6 | 5.6x8 | 5 |
| ER_-100 | 100 | 1, 3R, 4, 12 | 12x10x6 | 10.3x8.3 | — | — | 12 |
| | | 4X-SST | | — | 12.7x8.3 | 8.3x10.7 | 12 |
| | | 4X-plastic (1) | 13x13x6 | — | 14x7.6 | 9.6x12 | 8 |
| ER_-200 | 200 | 1, 3R, 4, 12 | 20x16x8 | 18.3x14.3 | — | — | 39 |
| | | 4X-SST | | — | 20.7x14.3 | 18.3x16.7 | 39 |
| | | 4X-plastic (1) | 20x17x12 | — | 21.5x10.1 | | 31 |
| ER_-400 | 400 | 1, 3R, 4, 12 | 36x30x8 | 34.3x28.3 | — | — | 122 |
| | | 4X-SST | | — | 36.7x28.3 | 34.3x30.7 | 122 |
| | | 4X-plastic (1) | 37x32x14 | — | 38x28.9 | — | 103 |
| ER_-600 | 600 | 1, 3R, 4, 12 | 48x36x12 | 46.3x34.3 | — | — | 209 |
| | | 4X-SST | | — | 48.7x34.3 | 46.3x36.7 | 209 |
| | | 4X-plastic (1) | 51x37x 14 | — | 50x28.5 | — | 187 |
| ER_-800 | 800 | 1, 3R, 4, 12 | 48x36x12 | 46.3x34.3 | — | — | 211 |
| | | 4X-SST | | — | 48.7x34.3 | 46.3x36.7 | 211 |
| | | 4X-plastic (1) | 51x37x 14 | — | 50x28.5 | — | 189 |
| ER_-1200 | 1200 | 1, 3R, 4, 12 | 60x36x16 | 58.3x34.3 | — | — | 268 |
| | | 4X-SST | 60x36x16 | — | 60.7x34.3 | 58.3x36.7 | 268 |

1 Enclosures ≤100 A are polycarbonate, flammability rating UL 94-5V A-V0, ≥200 A are fiberglass, flammability rating UL 94-5V.

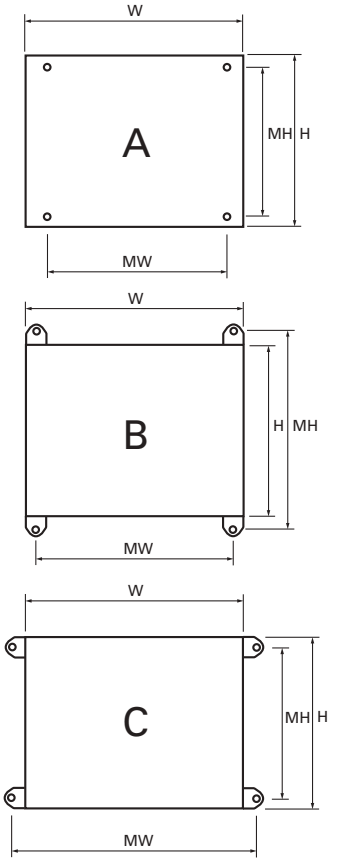


### Available field-installed accessories - order separately

### Auxiliary contacts for 30 to 1200 amp switches.

| Switch amps | Contact type | No. of contacts | Cont. amp rating | Vac | Max. units per switch | Catalog no. |
|---|---|---|---|---|---|---|
| 30-100 | NO + NC | 1 of each | 10 | 240 | 4 | BAC01* |
| | NO | 2 | | | | BAC02* |
| 200-1200 | NO + NC | 1 of each | 10.1 | 125-250 | 2 | BAC03** |
| | NO + NC | 1 of each | | | | BAC04** |
| | NO + NC | 1 of each | 1 | 125 | | BAC11** |
| | NO + NC | 1 of each | | | | BAC12** |

* Two (2) Units per switch max.
**For one auxiliary contact, install either BAC03 or BAC11. For two auxiliary contacts, install BAC03 + BAC04, or BAC11 + BAC12.

### Terminal shrouds for 200 to 800 amp switches

| Switch amps | Poles | Location on switch | Catalog no. |
|---|---|---|---|
| 30-100 | 3 | Lineside and loadside | TSH3-3TB |
| 200 | | Lineside | TSH4-3T |
| | | Loadside | TSH4-3B |
| 400 | | Lineside | TSH5-3T |
| | | Loadside | TSH5-3B |
| 600 | | Lineside or loadside | TSH6-3TB |
| 800-1200 | | | TSH7-3TB |

## UL 508 enclosed non-fused disconnect — 16 to 80 A

### 3-/6-pole UL 508 600 Vac

Catalog number system:

**ER 4X - 63 N 6 P B**

**ER**

Enclosed Rotary disconnect

**NEMA rating**

1, 3R, 4, 4X (304 SST), 4P (4X Plastic), 12

**Amp rating**

16, 25, 40, 63, 80

**N = non-fused**

**Number of poles**

3 = 3-pole, 6 = 6-pole

**Handle type**

S = Selector*, P = Pistol**

**Handle color**

B = Black, R = Red

* 6-Pole switches only, selector handle does not interlock the enclosure door.
**3-pole switches only.

NEMA 1, 3R, 4 and 12 | NEMA 4X 304 stainless steel | NEMA 4X

**16-80 A UL 508 non-fused switches**

### Catalog numbers

All catalog numbers provided with a black selector handle. Order red/yellow handle by changing the suffix "B" to "R."

| Amps | Poles | NEMA enclosure and catalog no. | | | | | |
|---|---|---|---|---|---|---|---|
| | | 1 | 3R | 4 | 4X plastic [1] | 4X 304 stainless | 12 |
| 16 | 3 | ER1-16N3PB | ER3R-16N3PB | ER4-16N3PB | ER4P-16N3PB | ER4X-16N3PB | ER12-16N3PB |
| | 6 | ER1-16N6SB | ER3R-16N6SB | ER4-16N6SB | ER4P-16N6SB | ER4X-16N6SB | ER12-16N6SB |
| 25 | 3 | ER1-25N3PB | ER3R-25N3PB | ER4-25N3PB | ER4P-25N3PB | ER4X-25N3PB | ER12-25N3PB |
| | 6 | ER1-25N6SB | ER3R-25N6SB | ER4-25N6SB | ER4P-25N6SB | ER4X-25N6SB | ER12-25N6SB |
| 40 | 3 | ER1-40N3PB | ER3R-40N3PB | ER4-40N3PB | ER4P-40N3PB | ER4X-40N3PB | ER12-40N3PB |
| | 6 | ER1-40N6SB | ER3R-40N6SB | ER4-40N6SB | ER4P-40N6SB | ER4X-40N6SB | ER12-40N6SB |
| 63 | 3 | ER1-63N3PB | ER3R-63N3PB | ER4-63N3PB | ER4P-63N3PB | ER4X-63N3PB | ER12-63N3PB |
| | 6 | ER1-63N6SB | ER3R-63N6SB | ER4-63N6SB | ER4P-63N6SB | ER4X-63N6SB | ER12-63N6SB |
| 80 | 3 | ER1-80N3PB | ER3R-80N3PB | ER4-80N3PB | ER4P-80N3PB | ER4X-80N3PB | ER12-80N3PB |
| | 6 | ER1-80N6SB | ER3R-80N6SB | ER4-80N6SB | ER4P-80N6SB | ER4X-80N6SB | ER12-80N6SB |

1 Polycarbonate enclosure flammability rating UL 94-5V A-V0.

### Switch ratings

For wire types, ranges and terminal torques, see table on page 11-60.

| Amps | Switch catalog no. | Vac | SCCR with max upstream Class J fuse | Max. Hp @ 600 V |
|---|---|---|---|---|
| 16 | RD16-3-508 | 600 | 65 kA /30 A | 10 |
| 25 | RD25-3-508 | | | 20 |
| 40 | RD40-3-508 | | 65 kA /30 A — 10 kA / 60 A | 25 |
| 63 | RD63-3-508 | | 65 kA /60 A — 50 kA / 100 A | 40 |
| 80 | RD80-3-508 | | 50 kA / 100 A | 40 |

Note: Voltage, SCCR and horsepower ratings are the same for 3- and 6-pole switches.

## UL 508 enclosed non-fused disconnect — 16 to 80 A

### Enclosure weights and dimensions

| NEMA enclosure | Poles | Switch amps | H x W x D (in) | Mounting centers h x w (in) A | B | C | Weight (lbs) |
|---|---|---|---|---|---|---|---|
| 1, 3R, 4, 12 | 3 | 16-80 | 8x6x6 | 6.3x4.3 | — | — | 8 |
| | 6 | | 10x8x6 | 8.3x6.3 | — | — | 11 |
| 4X-304 SST | 3 | | 8x6x6 | — | 8.7x4.3 | 6.3x6.7 | 8 |
| | 6 | | 10x8x6 | — | 10.7x6.3 | 8.3x8.7 | 11 |
| 4X-plastic [1] | 3 | 16-63 | 7.4x8.7x5.8 | — | 8x3.6 | 3.6x8 | 4 |
| | | 80 | 9.4x8.7x5.9 | — | 10x3.6 | 5.6x8 | 5 |
| | 6 | 16-8 A | 11.4x10.7x6.3 | — | 12x5.6 | 7.6x10 | 6 |

1 Polycarbonate.

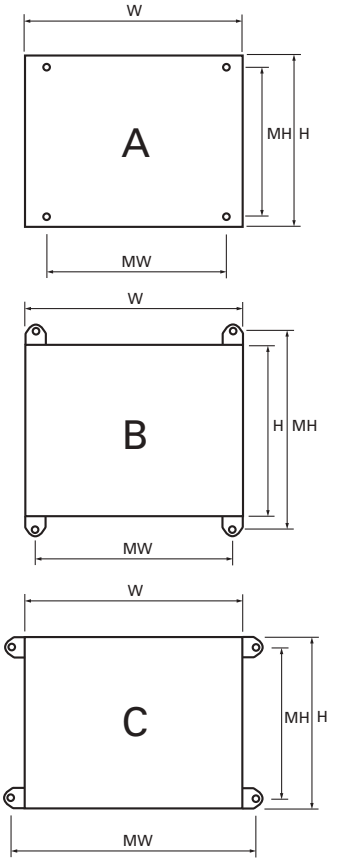


### Available field-installed accessories - order separately

### Auxiliary contacts

| Contact type | No. of contacts | Cont. amp rating | Vac | Max. units per switch | Catalog no. |
|---|---|---|---|---|---|
| NO + NC | 1 Ea. | 10 | 240 | 2 (1 per side, 4 contacts total) | BAC01 |
| NO | 2 | | | | BAC02 |

Auxiliary contact configurations

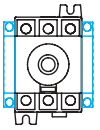

### Terminal shrouds

Includes terminal shroud for both lineside and loadside.

| Switch amps | Poles | Location on switch | Catalog no. |
|---|---|---|---|
| 16-40 | 3 | Lineside and loadside | TSH1-3TB |
| 63-80 | | | TSH2-3TB |

### Switched 4th pole

Converts 3-pole switch to 4-pole switch.

| Switch amps | Catalog no. |
|---|---|
| 16 | POLE-16 |
| 25 | POLE-25 |
| 40 | POLE-40 |

# Bussmann series Quik-Spec™ Coordination Panelboard

Up to 200 kA SCCR in 40% less space than traditional solutions

Plus, the easiest way to achieve selective coordination

## Contents


| Description | Section page |
|---|---|
| **Quik-Spec™ Coordination Panelboards** | |
| QSCP Up to 400 A | 2 |
| QSCP 600 to 1200 A | 3 |
| **Quik-Spec elevator disconnects** | |
| Power Module™ switches and panels | 4-5 |
| **HVAC disconnects** | |
| Fused, non-fused, GFCI | 6 |

## 30-400A Quik-Spec™ Coordination Panelboard (QSCP)

Configurable 600 Vac fused panelboard with from 30 to 400 amp mains, 15 to 100 amp 1-, 2- and 3-pole branch switches and 18, 30 or 42 branch circuit positions. Finger-safe fused branch circuit switches use the time-delay or fast-acting CUBEFuse available in ratings from 1 to 100 amps.

### Ratings

- Volts
  - Up to 600 Vac
  - Up to 125 Vdc *
- Amps 30, 60, 100, 200, 225 or 400 A
- SCCR
  - 200 kA, 100 kA or 50 kA AC
  - 100 kA or 20 kA@125 Vdc*

* Vdc rating applicable to MLO panels only. 50 and 60 amp switches are rated 125 Vdc for installed fuse amp ratings up to 40 A and 24 Vdc for installed fuse amp ratings from 45 to 60 A. 90 and 100 amp switches are rated 125 Vdc for installed fuse amp ratings up to 80 A and 24 Vdc for installed fuse amp ratings from 90 to 100 A.

### Agency information

- UL Listed to UL 67
- Complies with NFPA 70

### Mains

- MLO (main lug only)
- Fused disconnect
- Non-fused disconnect

### Enclosure**

- NEMA 1 (top or bottom feed)
- NEMA 3R (bottom feed only)
- Consult factory for other ratings

** Standard size 20" W x 5" D x various heights, depending on configuration. Flush mount and door-in-door not available with NEMA 3R enclosure.

### Mounting

- Surface – NEMA 1 and 3R
- Flush – NEMA 1 only

### Doors

- Single - NEMA 1 and 3R
- Door-in-Door – NEMA 1 only

### Branch positions

- 18, 30 and 42 (factory configured)

### Branch switches

- 1-, 2- and 3-pole amp rating rejecting CCP2B fused switches† (field installable)
- Amp rejection breaks 15, 20, 30, 40, 50, 60, 70, 90, 100 A

† CCP2Bs will not accept a fuse with a greater amp rating than the switch.

CCP2B 3-pole branch switch features lockout provision for 1/4" lock

### Loadside lugs and disconnect

- Feed-through single and double
- Fused loadside disconnect, ≥100 to ≤200 amp (400 amp panels only)

### Neutrals

- 200, 400 and 800 A unbonded and bonded

### Ground

- Non-isolated or isolated

### Features

- UL Listed and cULus to Canadian Standard 22.2, No. 29-M1989 make it easy to address NEC and CEC selective coordination requirements in an all fused system or upstream Eaton circuit breakers
- Value-engineered for greater flexibility with up to 400 amp mains, 200 kA SCCR, 100 A branches with 18, 30 and 42 branch positions
- Same size footprint as traditional circuit breaker panelboards and 40% smaller than standard fusible panelboards: 20" W x 5-3/4" D x various heights (depending on configuration)
- Increased safety with the current-limiting finger-safe Class CF CUBEFuse that helps reduce arc flash hazard levels

### Optional surge protection

2017 NEC 700.8 requires a listed SPD to be installed in or on all emergency system panelboards.

Any QSCP intended for installation on an AC circuit can be ordered with an Surge Protective Device to comply with NEC 700.8.

The installed SPDs feature a remote Form C contact relay (rated at 250 Vac/0.5 A ) for easy integration into a monitoring system.

### Ordering

The QSCP is factory configured to the specific electrical system. To place your order, contact your Bussmann series product distributor or representative and provide the relevant electrical and circuit information for your installation.

**Data sheet no. 1160**

## 600-1200A Quik-Spec Coordination Panelboard (QSCP)

Configurable fused panelboard with 600, 800 and 1200 amp MLO mains and branch switches up to 600 amps.

### Ratings

- Volts
  - Up to 600 Vac
  - Up to 125 Vdc
- Amps 600, 800, 1200 A
- SCCR 200 kA

### Agency information

- UL Listed to UL 67
- Complies with NFPA 70

### Assembly

- Main lug only
- Floor mount NEMA 1 enclosure
- Branch switches 1-, 2- and 3-pole, 15 to 600 A

### Available branch switch fuses

- Fast-acting or time-delay Class J (time-delay LPJ or fast-acting JKS) non-CCP2B disconnects only
- High speed DFJ Class J fuses (non-CCPB disconnects only)
- Fast-acting or time-delay Class CF (time-delay TCF or fast-acting FCF) CCP2B disconnects only

### Features

- Configurable panelboards with options for 600, 800 and 1200 A MLO mains and branches from 15-600 A all rated 200 kA SCCR at 600 Vac
- The CCP2B finger-safe branch switches (utilizing the UL Class CF CUBEFuse up to 100 A) features amp rating rejection to help prevent overfusing
- Fused switches make it simple to address NEC selective coordination system requirements in an all fused system or qwith upstream Eaton circuit breakers.

### Ordering

The QSCP is factory configured to the specific electrical system. To place your order, contact your Bussmann series product distributor or representative and provide the relevant electrical and circuit information for your installation.

### Configuration and dimensions — in

| Panel amps | Branch configurations | H | W | D |
|---|---|---|---|---|
| 600 | (18) 1-100 A | 65 | 27 | 15 |
| | (18) 1-100 A + 200 A single | | | |
| | (18) 1-100 A + 200 A twin | | | |
| | 200 A single + 200 A single | | | |
| | 200 A single + 200 A twin | | | |
| | 200 A twin + 200 A twin | | | |
| | (2) 300 A single | 89 | 38 | 15 |
| 800 | (18) 1-100 A + 200 A single | 65 | 38 | 15 |
| | (18) 1-100 A + 200 A twin | | | |
| | (2) 200 A twin | | | |
| | (18) 1-100 A + 400 A single | 89 | 38 | 15 |
| | 200 A twin + 400 A single | | | |
| | (2) 400 A single | | | |
| 1200 | (18) 1-100 A + 600 A single | 89 | 38 | 15 |
| | (3) 200 A twin | | | |
| | 200 A twin + 600 A single | | | |
| | (2) 200 A twin + 400 A single | | | |
| | (3) 400 A single | 102 | 38 | 15 |
| | 600 A single + 400 A single + 200 A single | | | |
| | 600 A single + 400 A single + 200 A twin | | | |
| | (2) 600 A single | | | |

## Quik-Spec Power Module switch and panel all-in-one elevator disconnects

Fused power switch (PS) or panel (PMP) with shunt trip and fire safety interface provide a single point tie in with fire alarm systems.

### Ratings

- Volts 600 Vac, 3Ø
- Amps*
  - 30-400 A (PS)
  - 30-200 A (PMP feeder switches)
  - 400-800 A (PMP main switches)
- SCCR 200 kA RMS

* Contact your Bussmann series product representative for applications greater than 800 amps.

### Agency information

- Power Module switch (**PS**) — UL Listed (UL 98) enclosed and dead front switch Guide 96NK3917, File E182262, NEMA 1, UL 50 Listed enclosure**, cUL per Canadian Standards C22.2, No. 0-M91-CAN/CSA C22.2, No. 4-M89 Enclosed switch.
- Power Module Panel (**PMP**) — UL 98 enclosed and deadfront switches, complies with NFPA 70

**NEMA 12, 3R, and 4 enclosures also available.

### Elevator shutdown

- ANSI/ASME A17.1, 2.8.3.3.2
- NEC 620.51(B) (elevator shutdown)
- NEC 240.12 (orderly shutdown)
- Shunt trip voltage monitoring
- NFPA 72, 6.16.4.4

### Selective coordination

- NEC 620.62

### Auxiliary contact (hydraulic elevator)

- NEC 620.91(C)

### Features

- Internally powered, relay activated shunt trip system
- Mechanically interlocked auxiliary contact
- Self-contained adherence to elevator consensus standards, NFPA 70, NFPA 72, ANSI/ASME A17.1
- Shunt trip capability
- Fire safety signal interface
- Shunt trip voltage monitoring
- Component protection with Low-Peak™ Class J fuses
- Lockable in the open position with three-lock capability
- Optional key-test switch and optional pilot light for easy inspection
- No annual calibration or testing of overcurrent protection required
- Padlockable for service-work safety and open-door "override" for troubleshooting

PS† Power Module Switch for single elevator applications.

PMP† Power Module Panel for multiple elevator applications.

† Fused main disconnect requires Class J fuses, not supplied with switch.

### Typical applications

- Elevator disconnects
- Computer room shunt trip disconnect
- Fire safety interface relay

### Accessories

- For added safety, use the Bussmann series SAMI™ fuse covers to improve maintenance personnel protection (OSHA 1910.333, Paragraph C)

### Ordering

- The Quik-Spec Power Module Switch and Panel are factory configured. To place your order, have all relevant electrical and circuit information contact your Bussmann series product representative.

**Data sheet no. 1145 (switch) 1146 (panel)**

## Hydraulic elevators

Hydraulic elevators need battery backup to help prevent stranding passengers. To keep the elevator from moving when it's been manually shut down for maintenance, the NEC requires battery backup be connected to the elevator disconnecting means through an auxiliary contact.

However, an unintended consequence can be passengers getting stranded because of devices that open automatically (circuit breakers and disconnects utilizing a molded case switch with a trailing fuse block) will operate with a fault on their loadside. That operation also disables the battery backup and strands passengers. That's why the Power Module has a non-automatic fusible shunt trip switch. If the Power Module has a fault on its loadside, the fuses open and the battery stays enabled. Thus the Power Module ensures that battery power is enabled when the passengers need it to exit - and disabled to allow safe maintenance of the elevator and hoistway.

| Scenario | Battery lowering required | Reason | Offered by Power Module | Offered by other elevator discon-nects |
|---|---|---|---|---|
| Power failure | Yes | Need to lower elevator and allow passengers to exit. | Yes | Yes |
| Fire in shaft or machine room | No | Recall is initiated by smoke detector and lowers elevator to a safe floor. Battery not needed. | Yes | Yes |
| Disconnect manually opened | No | Worker to perform maintenance. Elevator must remain stationary to prevent injury. | Yes | Yes |
| Fault on loadside of disconnect | Yes | Need to lower elevator and allow passengers to exit. | Yes | No |

### QuikShip service program, 3 days for switches and 10 days for panels!

Ship-direct service within three business days for Power Module switches (PS_) and 10 business days for Power Module panels (PMP_).

| Power Module switch* | | |
|---|---|---|
| **Catalog no.** | **Amps** | **Volts** |
| PS6T48R1KGBF3-X | 60 | 480 |
| PS1T48R1KGBF3-X | 100 | 480 |
| PS1T20R1KGBF3-X | 100 | 208 |
| PS2T48R1KGBF3-X | 200 | 480 |
| PS2T20R1KGBF3-X | 200 | 208 |

| Power Module panel** | |
|---|---|
| **Catalog no.** | **Amps** |
| PMP-400-X | 400 |
| PMP-600-X | 600 |
| PMP-800-X | 800 |

* Three day PS_ shipment requires ordering from catalog numbers shown, **limit three units or less per order**.
**10 day PMP_ shipment covers NEMA 1 enclosures with the amp ratings shown and all requirements for relay type (AC or DC), accessory options and number of switches. To order PMP_, contact your Bussmann series product representative with all relevant electrical and circuit information.

### Power Module Switch catalog number system

To order, use this build-a-code to specify your Power Module switch.

**PS 1 T48 R1 K G N1 B F1 U**

**PS = Power Module Switch**

**Amp rating†**
- 3 = 30, 6 = 60, 1 = 100
  2 = 200, 4 = 400

**Control transformer*†**
- T20 = 208 V, T24 = 240 V
  T48 = 480 V, T60 = 600 V

**Fire safety interface relay (3PDT, 10A, 12V)†**
- R1 = 120 Vac coil,
  R2 = 24 Vdc coil

**Optional key test switch**
- K = Key

**Optional pilot light ON**
- G = Green, R = Red
  W = White

**Optional neutral lug††**
- N6 = 30-60 A, N1 = 100 A
  N2 = 200 A, N4 = 400 A

**Auxiliary contacts†**
- B = 2 NO/NC

**Fire alarm voltage monitoring relay (to monitor shunt trip voltage)**
- F1 = Single-pole,
  F3 = Three-pole**

**Optional NEMA enclosures (Type 1 standard with no suffix designation required)**
- U = Type 3R, Y = Type 4,
  Z = Type 12

* 100 Va with primary and secondary fusing (120 V secondary).
**Only for use with R1 option.
† Required equipment.
††Neutral lug rating should be equal to or greater than the switch amp rating.



**Data sheet no. 1145 (switch) 1146 (panel)**

## Fused and non-fused AC disconnects

Fused and non-fused pullout AC disconnects in NEMA 3R enclosures. Fused versions are available in 30 and 60 amp ratings with or without self-testing GFCI receptacles. Non-fused versions are available in 60 amp versions with or without self-testing GFCI receptacles.

Fused disconnect

Non-fused disconnect

Non-fused disconnect with GFCI receptacle

### Ratings

- Volts
  - 120 Vac single-phase
  - 240 Vac split-phase
- Amps 30 or 60 A

### Agency Information

- UL Listed to UL 1429, cUL Certified, UL Guide WGEW

### Conductors

- 3-14 AWG Cu/Al

### Enclosure

- Metallic NEMA 3R housing with weather resistant coating

### Dimensions

- See catalog numbers table

### Features

- AC disconnects meet NEC Code requirements under article 440.14
- Self-testing GFCI units meet NEC Code requirements under articles 210.63, 210.8, and 406.8(B)(1)
- NEMA 3R enclosures withstand outdoor environment
- Padlockable with two-position pullout handle to lock safety shield when in the ON position. (Not available on GFCI or 60 A switched units.) For added safety, pullout handle can be stored in the compartment in the OFF position

### Typical applications

- Residential, light industrial/commercial AC and heat pump service
- Spas/whirlpools, swimming pools, pump houses
- Suitable for use as service entrance equipment with field-installed ground bar. Order catalog number DPFG

| Catalog no. | Description | Amp rating | Max Hp rating 120 V | Max Hp rating 240 V | Fuse class | Approximate dimensions (in) Height | Width | Depth |
|---|---|---|---|---|---|---|---|---|
| **Fused disconnects** | | | | | | | | |
| B221-30F | Pullout disconnect | 30 | 1.5 | 3 | H or R | 8-3/4 | 5-3/8 | 2-7/8 |
| B221-30FGFST | Pullout disconnect with GFCI | | | | | 13 | 7-1/2 | 4-3/4 |
| B221-30FGFWTST | Pullout disconnect with weather-resistant/tamper-resistant rated GFCI | | | | | | | |
| B222-60F | Pullout disconnect | 60 | 3 | 10 | H or R | 8-3/4 | 5-3/8 | 2-7/8 |
| B222-60FGFST | Pullout disconnect with GFCI | | | | | 13 | 7-1/2 | 4-3/4 |
| B222-60FGFWTST | Pullout disconnect with weather-resistant/tamper-resistant rated GFCI | | | | | | | |
| **Non-fused disconnects** | | | | | | | | |
| B222-60NF | Pullout disconnect | 60 | 3 | 10 | * | 8-3/4 | 5-3/8 | 2-7/8 |
| B222-60NFGFST | Pullout disconnect with GFCI | | | | | 11-3/4 | 6-1/2 | 4-1/2 |
| B222-60NFGFWTST | Pullout disconnect with weather-resistant/tamper-resistant rated GFCI | | | | | | | |
| B222-60NFNA | Disconnect switch | | — | | | 8-3/4 | 5-3/8 | 3-5/8 |

* Upstream overcurrent protective device (OPCD) not to exceed 60 A.

For a 30 and 60 amp pullout replacement handle, order catalog number 96-3258-4.

### Recommended Bussmann series fuses

| Fuse class | Catalog symbol | Operation | Available amps | Data sheet no. |
|---|---|---|---|---|
| H | NON-(amp) | One time, general purpose | Up to 60 | 1030 |
| R | FRN-R-(amp) | Dual element, time-delay | Up to 60 | 1019 |
| | LPN-RK-(amp)SP (non-indicating) | | | 1003 |
| | LPN-RK-(amp)SPI (indicating | | 35 to 60 | 1003 |

**Data sheet no. 1143**

## Contents


| Description | Section page |
|---|---|
| **Selecting Type 1 SPDs** | **2-3** |
| **Type 1 SPDs** | |
| SurgePOD PRO Type 1, NEMA 4X | 4-5 |
| BSPA, Type 1 and 2, NEMA 4X | 6-9 |
| BSPD high capacity Type 1 and 2, NEMA 1 and 4X | 10-14 |
| **UL DIN-Rail high SCCR Type 1 SPDs** | |
| 1-pole, BSPM_S2G | 15-16 |
| 2-pole, BSPM_S3G | 17-18 |
| 3-pole, BSPM_WYG/DLG | 19-20 |
| 4-pole, BSPM_WYNG/HLG | 21-22 |
| **UL DIN-Rail power and control voltage Type 4 SPDs** | |
| 1-pole, Type 4 power BSPM_LV | 23-24 |
| 2-pole, Type 4 voltage BSPH2A_LV | 25-26 |
| **UL 497B DIN-Rail data signal SPDs** | |
| RJ45/Ethernet | 27 |
| Universal 4 wire | 28-29 |

## Selecting a Type 1 SPD

### Electrical systems and connections

**Step 1:** Review the following system diagrams that show the SPD connection points for the Bussmann series SPD models that may be applied.

**Step 2:** Locate the system diagram that matches your application, note the applicable SPD model numbers and then proceed to the product pages for their details.

Understanding the following will help assure that the correct surge protective device is specified:

- Typical North American electrical systems include single-phase, split-phase, Delta and Wye.
- Selecting the wrong SPD generally arises from misunderstanding the nominal system voltage, ground and neutral connections.
- General convention has it that a "ground" wire is not counted as a wire in the system description (e.g., 3 wire, 4 wire, etc.), but it is counted as a connection point if the SPD has a ground wire.
- Selecting a voltage rating for Wye systems must be based upon its nominal system voltage rating and not on the leg-to-leg voltages.
- Bonded N-G configurations do not require protection at the service entrance transformer, but protection is suggested in downstream bonded N-G systems if the length of conductor making the bond is greater than 10 feet (3m).

BSPD high capacity

BSPA

SurgePOD PRO

### Two wire single-phase - 2 connection points

Application: Sub-panel or feeder panel

Volts: 120, 240 (L-N)

Note: Must be installed within 10 feet (3m) of a bonded neutral ground connection per IEEE C62.41-1991.

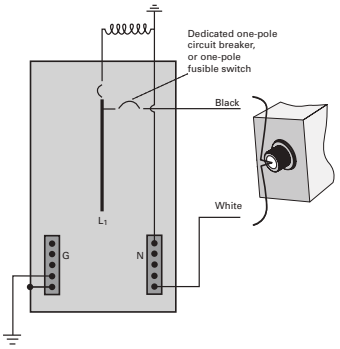


**SPD catalog numbers:**

- BSPA
  - Specify from build-a-code catalog number system
- SurgePOD™ PRO
  - SPP40SP1120SN

### Three wire split-phase/two-pole - 3 connection points

Application: Service entrance panel

Volts: 120, 240 (L-N)

Note: Installation for where the SPD is greater than 10 feet (3m) from a bonded neutral-ground connection.

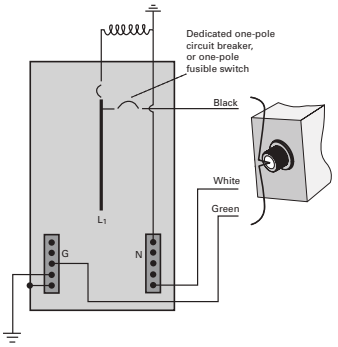


**SPD catalog numbers:**

- BSPA
  - Specify from build-a-code catalog number system

### Three wire split-phase/two-pole - 3 connection points

Application: Sub-panel or feeder panel

Volts: 120, 240 (L-N), 240, 480 (L1-L2)

Note: Installation at or less than 10 feet (3m) from the transformer and within 10 feet (3m) of a bonded-neutral ground connection.

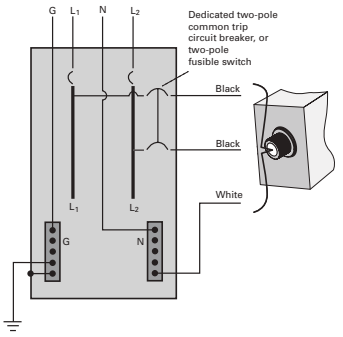


**SPD catalog numbers:**

- BSPA
  - Specify from build-a-code catalog number system
- SurgePOD PRO
  - SPP40SP2240PN

### Three wire split-phase/two-pole plus ground - 4 connection points

Application: Service entrance equipment

Volts: 120, 240 (L-N), 240 (L1-L2)

Note: Installation where greater than 10 feet (3m) of a bonded-neutral ground connection.

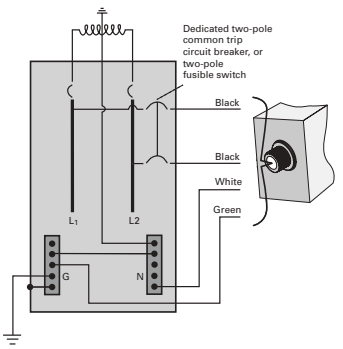


**SPD catalog numbers:**

- BSPA
  - Specify from build-a-code catalog number system

### Three wire split-phase/two-pole plus ground - 4 connection points

Application: Sub-panel or feeder panel

Volts: 120, 240 (L-N), 240 (L1-L2)

Note: For installation greater than 10 feet (3m) of a bonded-neutral ground connection.

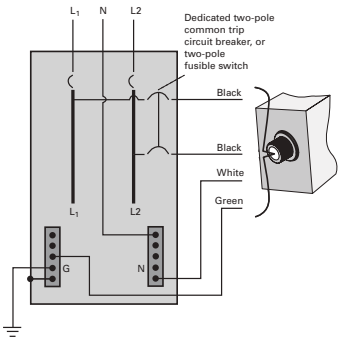


**SPD catalog numbers:**

- BSPA
  - Specify from build-a-code catalog number system

### Three wire Delta plus ground - 4 connection points

Application: Service entrance equipment, sub-panel or feeder panel

Volts: 240, 480, 600 (L-L)

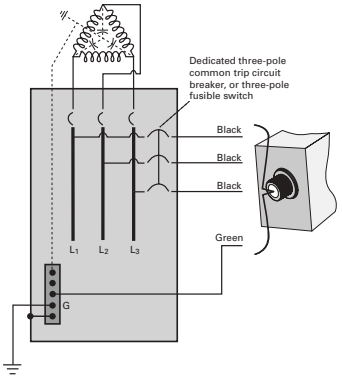


**SPD catalog numbers:**

- BSPA
  - Specify from build-a-code catalog number system
- BSPD
  - Specify from build-a-code catalog number system

### Three wire Wye plus ground - 4 connection points

Application: Sub-panel or feeder panel

Volts: 208, 480, 600 (L-L)

Note: A common MCC configuration for pumping and water/waste water treatment.

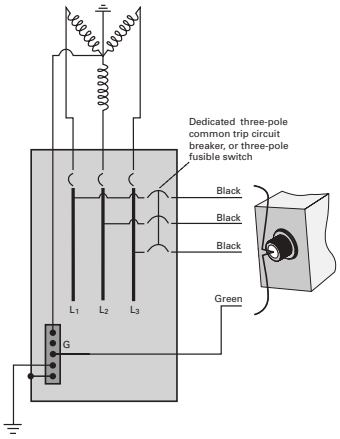


**SPD catalog numbers:**

- BSPA
  - Specify from build-a-code catalog number system
- SurgePOD PRO
  - SPP40SP3208WYG
  - SPP4SP3480WYG

### Four wire Wye plus ground - 5 connection points

Application: Service entrance equipment

Volts: 120, 127, 277, 347 (L-N), 208, 220, 480, 600 (L-L)

Note: Common system configuration with Neutral pulled into facility and bonded to ground.

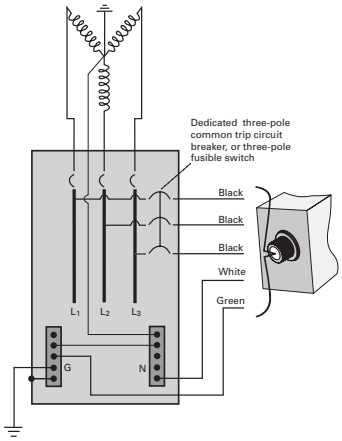


**SPD catalog numbers:**

- BSPA
  - Specify from build-a-code catalog number system
- BSPD
  - Specify from build-a-code catalog number system

### Four wire Wye plus ground - 5 connection points

Application: Sub-panel or feeder panel

Volts: 120, 127, 277, 347 (L-N), 208, 220, 480, 600 (L-L)

Note: Common system configuration with Neutral pulled into facility and bonded to ground.

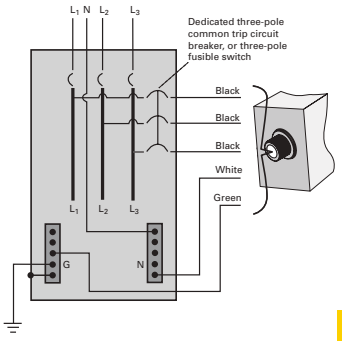


**SPD catalog numbers:**

- BSPA
  - Specify from build-a-code catalog number system
- BSPD
  - Specify from build-a-code catalog number system

## SurgePOD™ PRO for UL 1449 4th Edition Listed loadside and lineside protection

The Bussmann series SurgePOD PRO is a Type 1 UL Listed 1449 4th Edition surge protective device suitable for installation on both the loadside or lineside of the service entrance overcurrent protective device and is well suited for light commercial and residential applications.

Available in popular voltage and system specific versions to match common residential and light commercial electrical system and equipment requirements. The SurgePOD PRO delivers superior surge protection using MOV thermal disconnect technology that eliminates the need for additional overcurrent protection.

LISTED

RoHS 2011/65/EU

*easy*ID™ LED Status Indicator

Parallel connection to the electrical system permits the SurgePOD PRO SPD to be installed on any ampacity panel.

- Type 1 UL 1449 4th Edition Listed SPDs are easily selected and installed on the loadside or lineside of the service entrance overcurrent protective device
- Voltage specific models precisely match and protect electrical systems and equipment better than "one-size-fits-all" SPDs
- Thermal disconnect technology eliminates the need for additional fusing
- NEMA 4X enclosure for indoor or outdoor applications
- *easy*ID™ LED status indicator provides surge protection status at a glance

### Dimensions — in

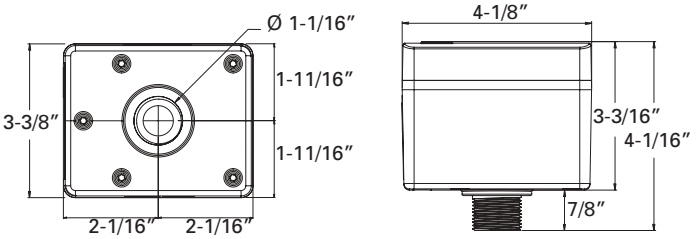


### Mounting

SurgePOD PRO is a panel mount device. It may also be mounted using a customer supplied bracket or directly onto a female threaded conduit fitting.

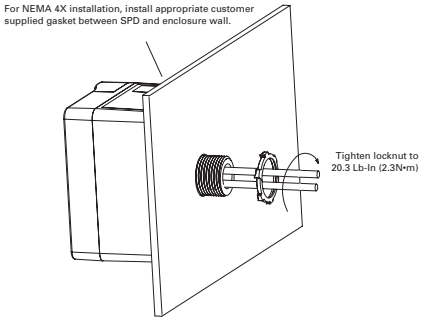


| Catalog no. | | |
|---|---|---|
| SPP40SP1120SN | SPP40SP3240DLG | SPP40SP3208WYG |
| SPP40SP2240PN | SPP40SP3480DLG | SPP40SP3480WYG |
| SPP40SP3600WYG | | |

See catalog number explanation below for details.

### Catalog number explanation

This is not a build-a-code for configuring an orderable catalog number. It's purpose is to show what portions of the catalog number denotes which specification.

**SPP 40S Px xxx xxx**

**SPP = Product family**

**Surge rating**

- 40 kA surge current capacity

**Number of wires**

- P1 = 1, P2 = 2, P3 = 3

**System voltage (Vac)**

- 120, 208, 240, 480, 600

**System type/wires and connection points**

- SN = Single-phase 2 wire, 2 connection points
- PN = Split-phase 3 wire , 3 connection points
- DLG = Three-phase Delta 3 wire + G, 4 connection points
- WYG = Three-phase Wye 3 wire + G, 4 connection points

### *easy*ID™ LED status indicator

The *easy*ID LED status indicator will illuminate when the unit is properly installed and the system or equipment being protected is energized. The following LED color/status indicates:

**GREEN LED = Good**

The circuit is energized and protected.

**RED LED = Replace**

The circuit is energized and unprotected.

The unit needs replacing.

**LED is Out / Unlit:**

The circuit is most likely deenergized

The unit's leads are disconnected

The unit is damaged

Authorized personnel should follow all prescribed lockout/tagout and safety procedures in troubleshooting the cause for the above conditions. Opening SurgePOD PRO enclosure will void the warranty.

**Data sheet no. 10033**

## SurgePOD PRO

| Catalog no. | Nominal system voltage | Max. continuous operating AC voltage (MCOV) ($V_C$) | System type | Connection points |
|---|---|---|---|---|
| SPP40SP1120SN | 120 | 150 | Single-phase 2 wire | 2 |
| SPP40SP2240PN | 120/240 | 150 | Split-phase 3 wire | 3 |
| SPP40SP3240DLG | 240 | 320 | Three-phase Delta 3 wire + G | 4 |
| SPP40SP3480DLG | 480 | 550 | Three-phase Delta 3 wire + G | 4 |
| SPP40SP3208WYG | 208 | 150 | Three-phase Wye 3 wire + G | 4 |
| SPP40SP3480WYG | 480 | 320 | Three-phase Wye 3 wire + G | 4 |
| SPP40SP3600WYG* | 600 | 420 | Three-phase Wye 3 wire + G | 4 |

* Not CSA Certified.

| Specifications (for all SurgePOD PRO units) | Values |
|---|---|
| Short-Circuit Current Rating (SCCR) | 200 kA |
| Nominal discharge current (8x20µs) ($I_n$) | 10 kA |
| Surge current capacity (8x20µs) ($I_{max}$) | 40 kA |
| Response time (ns) ($t_A$) | <25ns |
| Frequency | 50/60 Hz |
| Operating state/fault indication | Bi-color LED - green (good) / red (replace) |
| Conductor length / gauge | 18 inches, 10 AWG stranded tinned copper |
| Mounting | Chase nipple / bracket* |
| Enclosure / flammability ratings | NEMA 4X - UL 94-5VA |
| Degree of protection (installed state) | IP20 (finger-safe) |
| SPD install location | Indoor/outdoor |
| Circuit location | Lineside or loadside of service entrance overcurrent protective device |
| Operating temperature | -40°C to +65°C |
| Maximum operating altitude | 12,000FT |
| Agency information | UL Listed, CSA Certified, RoHS compliant |
| Standard | UL Type 1 1449 4th Edition SPD |
| Warranty | Two years** |

* Customer-supplied bracket.
**See Limited Warranty Statement 3A1502 for details at Eaton.com/bussmannseries.

## Voltage protection ratings (VPR)

| Catalog no. | Nominal system voltage | MCOV ($V_C$) | Voltage Protection Ratings (VPR) | | |
|---|---|---|---|---|---|
| | | | L-N | L-L | L-G |
| SPP40SP1120SN | 120 | 150 | 700 | — | — |
| SPP40SP2240PN | 120V/240 | 150 | 700 | 1200 | — |
| SPP40SP3240DLG | 240 | 320 | — | 2500 | 1200 |
| SPP40SP3480DLG | 480 | 550 | — | 3000 | 1800 |
| SPP40SP3208WYG | 208 | 150† | — | 1200 | 700 |
| SPP40SP3480WYG | 480 | 320† | — | 2500 | 1200 |
| SPP40SP3600WYG | 600 | 420† | — | 2500 | 1500 |

† SPD voltages are measured from Line-to-Neutral, or Line-to-Ground on systems where there is no neutral present. These units do not have a line-to-neutral, so the line-to-ground voltage is 120 V for the 208 V Wye L-G and 277 V for the 480 V L-G, making the normal voltage applied to the unit less than the MCOV values listed in the table.

## BSPA NEMA 4X Type 1 and 2

RoHS 2011/65/EU

The Bussmann series BSPA surge protective devices are UL 1449 4th Edition surge protectors. Application of BSPA units throughout a facility will help ensure that equipment is protected from damaging surges.

The BSPA compact NEMA 4X enclosure allows for installation external to an electrical assembly in a variety of environments.

BSPA units are available in all common voltage and system configurations, and in a variety of peak surge current capacity ratings from 50 through 200 kA per phase. Several feature package options (filtering, audible alarm and Form C contacts) extend application flexibility along with a range of configurable options suitable for most commercial and light industrial applications covering service entrances, distribution panelboards and point-of-use applications.

### Agency information

- UL 1449 4th Edition Type 1 and Type 2
- UL 1283 6th Edition
- Canadian Standards Association (CSAT) Type 1 and Type 2
- CSA C22.2 No. 269.1-14 for Type 1 SPD, CSA C22.2 No. 269.2-13 for Type 2 SPD, CSA C22.2 No. 8-13 for EMI filter
- RoHS compliant

### Features

- Thermally-protected metal oxide varistor (MOV) technology
- Tri-colored LED status indicators display continuous self-diagnostic testing, including neutral-ground mode
- 20 kA nominal discharge current ($I_n$) rating (maximum rating in the UL 1449 4th Edition standard)
- 50 through 200 kA per phase peak surge current capacity ratings
- Configure to order with five feature/option combinations
- Corrosion-resistant NEMA 4X enclosure with detachable mounting feet
- 200 kA short-circuit current rating (SCCR)
- Factory wired with 36-inch 10 AWG leads
- Optional Form C contact relay for integration into remote monitoring systems*
- Optional EMI/RFI filtering form improved power quality*
- Optional audible alarm*
- No user-serviceable parts or items requiring periodic maintenance
- Ten-year warranty

* See catalog number system for availability.

### Catalog number system

The catalog numbering system permits specifying any combination to meet requirements.

**BSPA 200 208Y 8 P**

**BSPA = Product family**

**Surge rating per phase**

- 050 = 50 kA per phase
- 100 = 100 kA per phase
- 150 = 150 kA per phase
- 200 = 200 kA per phase

**Voltage/system code**

- 120N = 120 V single-phase (2W +G)
- 240N = 240 V single-phase (2W +G)
- 240S = 120/240 V split-phase (3W +G)
- 240D = 240 V Delta (3W + G)
- 480D = 480 V Delta (3W + G)
- 600D = 600 V Delta (3W + G)
- 208Y = 120/208 V Wye (4W + G)
- 415Y = 240/415 V Wye (4W + G)
- 480Y = 277/480 V Wye (4W + G)
- 600Y = 347/600 V Wye (4W + G)

**Options**

- 1 = No options (standard configuration), Type 1
- 4 = Form C relay, Type 1
- 5 = Audible alarm and Form C relay, Type 1
- 7 = EMI filtering and Form C relay, Type 2
- 8 = EMI filtering, audible alarm and Form C relay, Type 2

**NEMA enclosure**

- P = NEMA 4X

BSPA wire port and conductors

BSPA with mounting feet

**Data sheet no. 10661**

## BSPA configurations

The BSPA allows for selecting along with the standard features the audible alarm, Form C relay contacts and EMI/RFI filtering options shown in table 1.

### Configurable features

| Feature | Standard | Options |
|---|---|---|
| Surge protection using thermally protected MOV technology | • | |
| Tri-colored LED protection status indicators for each phase | • | |
| Tri-colored LED protection status indicators for the neutral-ground protection mode | • | |
| Audible alarm | | • |
| Form C relay contact | | • |
| EMI/RFI filtering, for up to 40 dB of noise attenuation from 10 kHz to 100 MHz* | | • |

* Available on Type 2 SPD units only.

### Tri-colored LED status indicators

These LED indicators show continuous self-diagnostic testing, including neutral-ground mode and display:

- Green—Fully protected
- Yellow—Loss of neutral-to-ground protection
- Red—Loss of protection

LED protection status indicators showing full protection and phase faults

### Enclosure ratings, options, dimensions and weights

The BSPA NEMA 4X enclosure is supplied with mounting feet to facilitate installation in a variety of applications. There are two enclosure sizes, P1 and P2, dependent on the voltage code and surge rating.

### Available optional equipment

| Available option | Catalog no. |
|---|---|
| Flush mount plate for P1 enclosure | BSPA-FLUSHPLT1 |
| Flush mount plate for P2 enclosure | BSPA-FLUSHPLT2 |

### BSPA voltage configurations per enclosure size*

| P1 enclosure | | P2 enclosure | |
|---|---|---|---|
| Voltage code | kA | Voltage code | kA |
| 120N/240N | 50–200 | 240S | 120–200 |
| 240S | 50-100 | 208Y/415Y/480Y/600Y | |
| 208Y/415Y/480Y/600Y | | 240D/480D | |
| 240D/480D | | 600D | 50–200 |

* See catalog number system for voltage code details.

### Voltage protection ratings (VPRs) per ANSI/UL 1449 4th Edition

| Voltage code | Protection mode | | | |
|---|---|---|---|---|
| | L–N | L–G | N–G | L–L |
| **50 kA unit VPR** | | | | |
| 120N | 700 | 1200 | 700 | — |
| 240N | 1200 | 2000 | 1500 | — |
| 240S | 700 | 1200 | 700 | 1200 |
| 208Y | 700 | 1200 | 700 | 1200 |
| 415Y | 1200 | 2000 | 1500 | 2000 |
| 480Y | 1200 | 2000 | 1500 | 2000 |
| 600Y | 1500 | 1500 | 1500 | 2500 |
| 240D | — | 1000 | — | 1000 |
| 480D | — | 2000 | — | 2500 |
| 600D | — | 2500 | — | 2500 |
| **100 kA unit VPR** | | | | |
| 120N | 600 | 600 | 600 | — |
| 240N | 1200 | 1200 | 1200 | — |
| 240S | 600 | 600 | 600 | 1000 |
| 208Y | 600 | 600 | 600 | 1000 |
| 415Y | 1200 | 1200 | 1200 | 2000 |
| 480Y | 1200 | 1200 | 1200 | 2000 |
| 600Y | 1500 | 1500 | 1500 | 2500 |
| 240D | — | 1000 | — | 1000 |
| 480D | — | 2000 | — | 2500 |
| 600D | — | 2500 | — | 2500 |
| **150-200 kA unit VPR** | | | | |
| 120N | 700 | 700 | 700 | — |
| 240N | 1000 | 1200 | 1000 | — |
| 240S | 700 | 700 | 700 | 1200 |
| 208Y | 700 | 700 | 700 | 1200 |
| 415Y | 1200 | 1200 | 1200 | 2000 |
| 480Y | 1200 | 1200 | 1200 | 2000 |
| 600Y | 1500 | 1500 | 1500 | 2500 |
| 240D | — | 1000 | — | 1000 |
| 480D | — | 1800 | — | 2000 |
| 600D | — | 2500 | — | 2500 |

## BSPA specifications

| Description | | Value |
|---|---|---|
| Leads | Length | 36″ |
| | Size | 10 AWG stranded copper |
| Mounting | | Chase nipple/panel (with mounting feet) |
| Peak surge current capacity ratings available | | 50, 100, 150, 200 kA per phase |
| Nominal discharge current (In) | | 20 kA |
| Short-circuit current rating (SCCR) | | 200 kA |
| Single-phase voltages available (2W + G) | | 120, 240 |
| Split-phase voltages available (3W +G) | | 120/240 |
| Three-phase Wye system voltages available (4W + G) | | 120/208, 240/415, 277/480, 347/600 |
| Three-phase Delta system voltages available (3W + G) | | 240, 480, 600 |
| Input power frequency | | 50/60 Hz |
| Protection modes | Single–phase | L–N, N–G, L–G |
| | Split–phase | L–N, N–G, L–G, L–L |
| | Wye | L–N, N–G, L–G, L–L |
| | Delta | L–G, L–L |
| Maximum continuous operating voltage (MCOV): | Voltage code | |
| | 120N | 150 L–N, 150 L–G, 150 N–G |
| | 240N | 320 L–N, 320 L–G, 320 N–G |
| | 240S, 208Y | 150 L–N, 150 L–G, 150 N–G, 300 L–L |
| | 415Y, 480Y | 320 L–N, 320 L–G, 320 N–G, 640 L–L |
| | 600Y | 420 L–N, 420 L–G, 420 N–G, 840 L–L |
| | 240D | 320 L–G, 300 L–L |
| | 480D | 550 L–G, 640 L–L |
| | 600D | 840 L–G, 840 L–L |
| Ports | | 1 |
| Operating and storage temperature | | –40°F to +140°F (–40°C to +60°C) |
| Operating humidity | | 5% through 95%, non-condensing |
| Operating altitude | | Up to 2000 m (6561 ft) |
| Agency information | | UL 1449 4th edition, UL 1283 6th edition, CSA C22.2 No. 269.1-14 for Type 1 SPD, CSA C22.2 No. 269.2-13 for Type 2 SPD, CSA C22.2 No. 8-13 for EMI filter |
| Durability/repetitive strike test | | Passed 12,000 strikes to ANSI/IEEE C62.41 (20 kV, 10 kA) Category C waveform |
| SPD type | | UL 1449 4th edition and CSA Type 1 and Type 2 SPD (dependent on feature options) |
| Enclosure dimensions and weights | | Refer to Figure 1 and Figure 3 for enclosure dimensions and weights |
| Enclosure rating | | NEMA 4X enclosure* |
| Form C relay contact ratings | | 2 A at 30 Vdc or 250 Vac |
| Form C relay contact logic | | Power ON, normal state—NO contact = open, NC contact = closed |
| | | Power OFF or fault state—NO contact = closed, NC contact = open |
| EMI/RFI filtering attenuation | | Up to 40 dB from 10 kHz to 100 MHz |
| RoHS compliant | | Yes |
| Warranty | | Ten years standard |

* Mounting feet required to achieve NEMA 4X rating.

**Data sheet no. 10661**

**Dimensions — in (mm)**

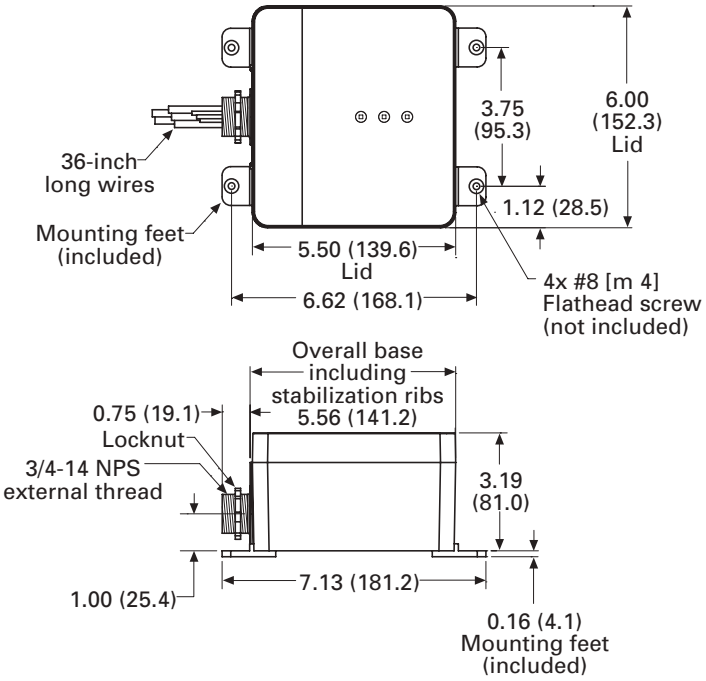


P1 enclosure, NEMA 4X with mounting feet dimensions, weight = 2.5 lb

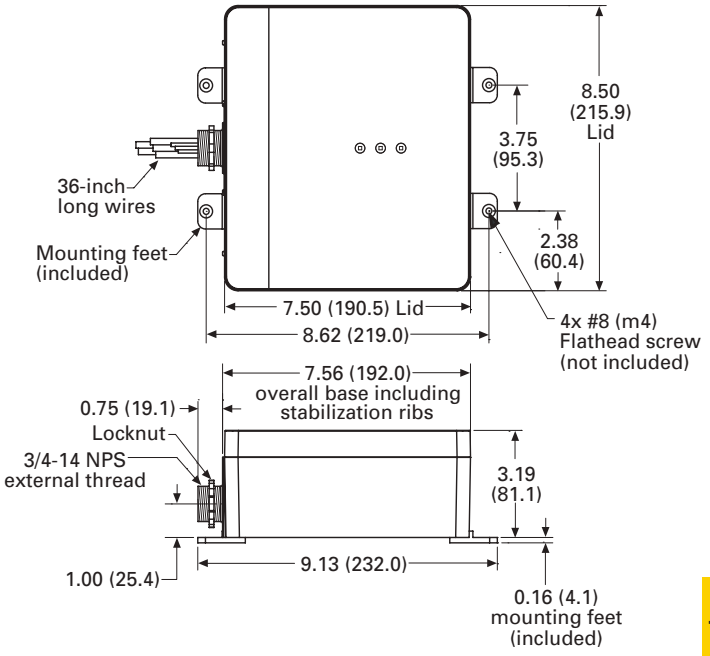


P2 enclosure, NEMA 4X with mounting feet dimensions, weight = 4 lb

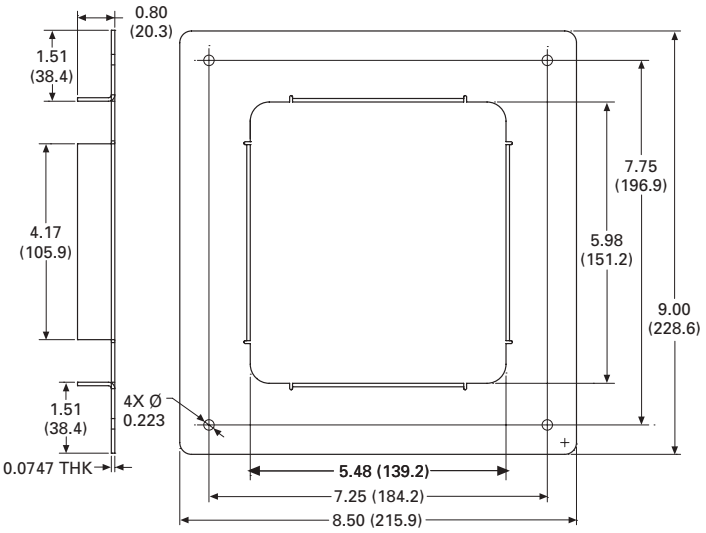


Optional flush mount plate for P1 enclosure (catalog number BSPA-FLUSHPLT1)

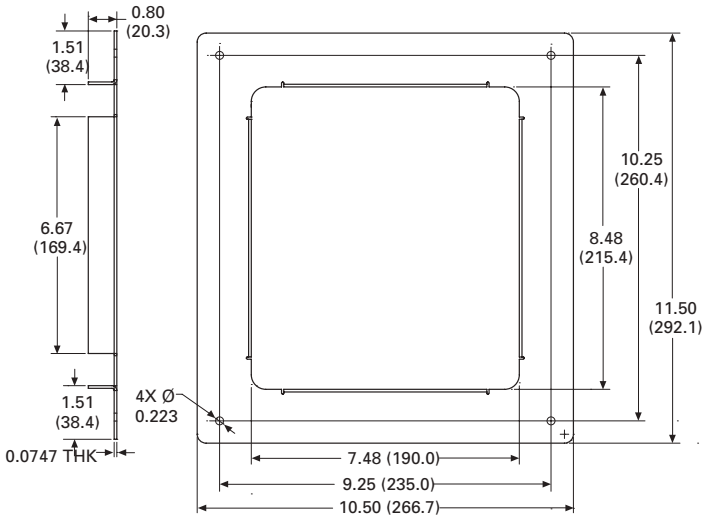


Optional flush mount plate for P2 enclosure (catalog number BSPA-FLUSHPLT2)

## BSPD high capacity Type 1 and 2

BSPD Surge Protective Devices (SPDs) are UL Listed 1449 4th Edition Type 1 or UL Recognized 1283 5th Edition Type 2 surge protectors, depending on the configuration. The BSPD is available for installation external to an electrical enclosure or panelboard. Application of BSPD units throughout a facility will help ensure that equipment is protected.

NEMA 1 steel enclosure 120 kA and 200 kA maximum surge current capacity

BSPD units are available for common Delta and Wye voltage systems in a variety of surge current capacity ratings from 120 kA through 400 kA. Available in three configurations, the BSPD's configurations and options make it easy to specify units for many electrical applications; including service entrances, distribution switchboards, panelboards and point-of-use.

NEMA 1 steel enclosure 300 kA and 400 kA maximum surge current capacity

NEMA 4X 304 Stainless Steel enclosure, all surge current capacities

- *Basic*, *Standard* and *Standard with Surge Counter* configurations UL Listed 1449 4th Edition, Guide VZCA, File E316410, CSA Certified Notice 516 File 243397
- Standard and Standard with Surge Counter configurations are also UL Recognized 1283 5th Edition, Guide VZCA2, File E316410, CSA Component Acceptance Std. C22.2
- RoHS compliant
- 20 kA nominal discharge current ($I_n$) rating (maximum rating assigned by UL)
- 120 kA through 400 kA per phase surge current capacity ($I_{max}$) ratings
- 200 kA Short-Circuit Current Rating (SCCR)
- Two color LED status indicators for each phase on Delta and Wye units, plus N-G on Wye units
- 10-Year warranty

### Configurations

The BSPD provides users with the option of selecting between three configurations:

- *Basic* (Type 1)
- *Standard* with Form C contact and EMI/RFI filter (Type 2)
- *Standard with Surge Counter* (Type 2)

The appropriate configuration can be specified from the catalog number system based on the application's requirements or specifications.

### Catalog number system

The catalog numbering system permits specifying any combination to meet requirements.

**BSPD 200 480D 2 K**

**BSPD = Product family**

**Surge rating per phase**

- 120 = 120 kA
- 200 = 200 kA
- 300 = 300 kA
- 400 = 400 kA

**Voltage/system code**

- 208Y = 120/208 Wye (4W + G)
- 480Y = 277/480 Wye (4W + G)
- 600Y = 347/600 Wye (4W + G)
- 240D = 240 Delta (3W + G)
- 480D = 480 Delta (3W + G)
- 600D = 600 Delta (3W + G)

**Configurations**

- 1 = Basic
  - Green and red LEDs per phase to indicate protection status.
  - Green and red LEDs on Wye units to indicate protection status of the neutral-to-ground mode
- 2 = Standard
  - Green and red LEDs per phase to indicate protection status
  - Green and red LEDs on Wye units to indicate protection status of the neutral-to-ground mode
  - Audible alarm with silence button
  - Form C contact relay
  - EMI/RFI filtering providing up to 50 dB of noise attenuation from 10 kHz to 100 MHz
- 3 = Standard With Surge Counter
  - Green and red LEDs per phase to indicate protection status
  - Green and red LEDs on Wye units to indicate protection status of the neutral-to-ground mode
  - Audible alarm with silence button
  - Form C contact relay
  - EMI/RFI filtering providing up to 50 dB of noise attenuation from 10 kHz to 100 MHz
  - Surge counter with reset button

**NEMA enclosures**

- K = NEMA 1
- P = NEMA 4X

**Data sheet no. 10209**

## BSPD configurations

| Features | Configuration: Basic (Type 1) | Standard (Type 2) | Standard with Surge Counter (Type 2) |
|---|---|---|---|
| Two color LED protection status indicators for each phase | X | X | X |
| Two color LED protection status indicators for the neutral-ground protection mode (Wye systems only) | X | X | X |
| Audible alarm with silence button | | X | X |
| Form C contact relay | | X | X |
| EMI/RFI filtering, providing up to 50 dB of noise attenuation from 10 kHz to 100 MHz | | X | X |
| Surge counter with reset button | | | X |

## Dimensions — in (mm)

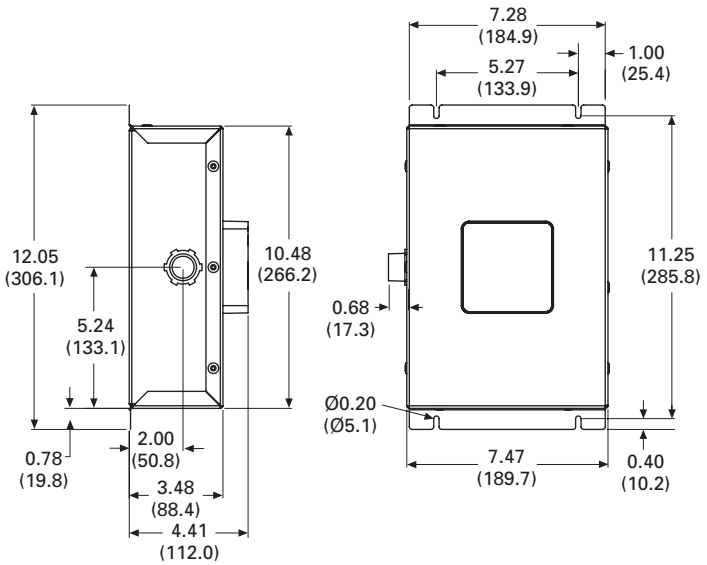


**120 kA and 200 kA Units/NEMA 1**

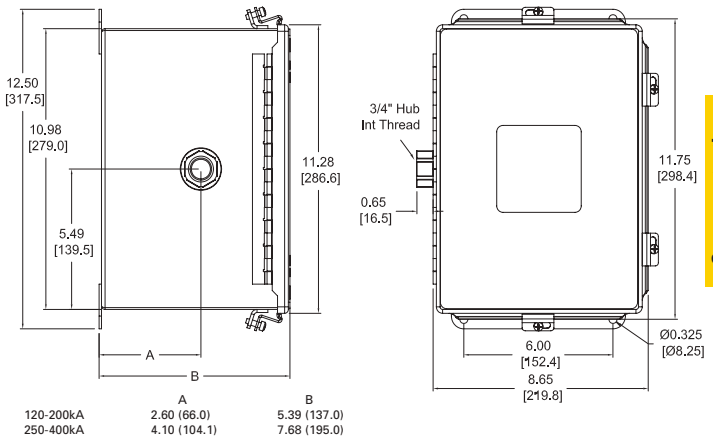


**120 kA to 400 kA Units/NEMA 4X**

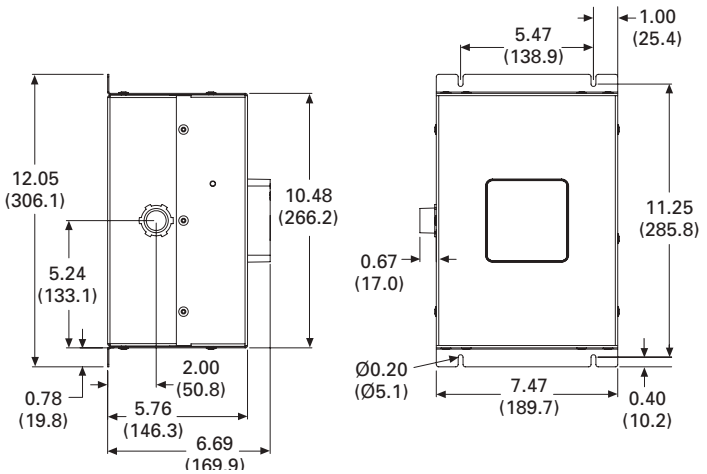


**300 kA and 400 kA Units/NEMA 1**

### Form C Contact relay wire color codes

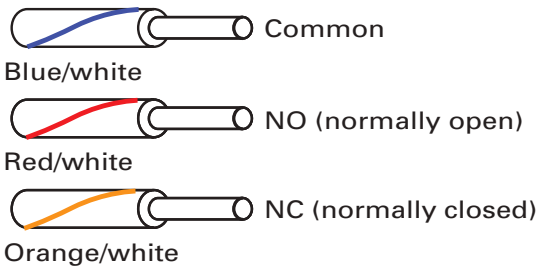


Surge protective devices

**Data sheet no. 10209**

## BSPD specifications

| Description | Values |
|---|---|
| Available system voltages | |
| Three-phase Wye | 120/208, 277/480 and 347/600 |
| Three-phase Delta | 240, 480 and 600 |
| Input power frequency | 50/60 Hz |
| Maximum Continuous Operating Voltage (MCOV) | |
| 208Y, and 240D voltage/system codes | 150 L-N,150 L-G, 150 N-G, 300 L-L |
| 480Y Voltage/system code | 320 L-N, 320 L-G, 320 N-G, 640 L-L |
| 600Y Voltage/system code | 420 L-N, 420 L-G, 420 N-G, 840 L-L |
| 480D Voltage/system code | 640 L-G, 640 L-L |
| 600D Voltage/system code | 840 L-G, 840 L-L |
| Short-Circuit Current Rating (SCCR) | 200 kA |
| Nominal discharge current ($I_n$) | 20 kA |
| Surge current capacity per phase ($I_{max}$) | 120 kA, 200 kA, 300 kA and 400 kA ratings available |
| SPD Types | |
| Type 1 | *Basic* configuration, can also be used in Type 2 applications |
| Type 2 | *Standard* and *Standard With Surge Counter* configurations |
| Enclosure types | NEMA 1 |
| | NEMA 4X 304 stainless steel |
| Ports | 1 |
| SPD conductor length/gauge | 48" (1.22m) 10 AWG Stranded copper |
| Form C contact relay (*Standard* and *Standard With Surge Counter* configurations only) | |
| Contact ratings | 150 Vac or 125 Vdc, 1A maximum |
| Lead length/gauge | 48 inches (1.22m) / 14 AWG |
| Contact logic | Power ON, normal state; N.O. contact = OPEN, N.C. contact = CLOSED<br>Power OFF, fault state; N.O. contact = CLOSED, N.C. contact = OPEN |
| Power consumption | |
| Basic configuration | 0.5 W — 208Y and 240D voltage/system codes |
| | 1.1 W — 480Y and 480D voltage/system codes |
| | 1.3 W — 600Y and 600D voltage/system codes |
| Standard and<br>Standard with Surge Counter configurations | 0.6 W — 208Y and 240D voltage/system codes |
| | 1.7 W — 480Y, and 480D voltage/system codes |
| | 2.1 W — 600Y and 600D voltage/system codes |
| Protection modes | |
| Three-phase Delta | L-G, L-L |
| Three-phase Wye | L-N, L-G, N-G, L-L |
| Operating temperature / humidity | -40 to +50°C (-40 to +122°F) / 5% to 95%, non-condensing |
| Operating altitude - ft (m) | 16,000 (5000) |
| EMI/RFI filtering attenuation | Up to 50 dB from 10 kHz to 100 MHz (*Standard* and *Standard With Surge Counter* configurations) |
| Weight - lbs (kg) | |
| NEMA 1 | 120-200 kA - 6.8 (3.1) |
| | 300- 400 kA -13.5 (6.1) |
| NEMA 4X | 120-200 kA - 14.6 (6.6) |
| | 300-400 kA - 21.0 (9.5) |
| Agency information | |
| *Basic, Standard* and *Standard with Surge Counter* configurations | UL Listed 1449 4th Edition File E316410 Guide VZCA, CSA Certified Notice 516 File 243397 |
| *Standard* and<br>*Standard with Surge Counter* configurations | UL Recognized 1283 5th Edition File E316410 Guide VZCA2, CSA Component Acceptance Std. C22.2 No. 8-M1986, File 243397 |
| RoHS compliant | Yes |
| Seismic withstand capability | Meets or exceeds the requirements specific to I.B.C. 2006, C.B.C. 2007 and U.B.C. Zone 4 |
| Warranty | 10 Years (see warranty statement 3A1502 for details at Eaton.com/bussmannseries) |

**Data sheet no. 10209**

## Voltage protection ratings

### ANSI/UL 1449 4th Edition voltage protection ratings

Voltage Protection Rating ($V_{PR}$) data for all units is included in the following tables, The data varies based upon the configuration and NEMA enclosure. $V_{PR}$ values for the *Basic* configurations are on the left-hand side of the page. Tables on the right-hand side contain VPR values for the *Standard* or *Standard with Surge Counter* configurations.

## NEMA 1: Basic

Catalog numbers ending with 1K.

### 120-200 kA

| | Protection mode | | | |
|---|---|---|---|---|
| Voltage/system code | L-N | L-G | N-G | L-L |
| 208Y | 700 | 700 | 700 | 1200 |
| 480Y | 1200 | 1200 | 1200 | 2000 |
| 600Y | 1500 | 1500 | 1500 | 2500 |
| 240D | — | 1000 | — | 1000 |
| 480D | — | 2000 | — | 2500 |
| 600D | — | 2500 | — | 2500 |

### 300 kA

| | Protection mode | | | |
|---|---|---|---|---|
| Voltage/system code | L-N | L-G | N-G | L-L |
| 208Y | 700 | 700 | 700 | 1000 |
| 480Y | 1200 | 1200 | 1200 | 1800 |
| 600Y | 1500 | 1500 | 1500 | 2500 |
| 240D | — | 1000 | — | 1000 |
| 480D | — | 1800 | — | 2000 |
| 600D | — | 2500 | — | 2500 |

### 400 kA

| | Protection mode | | | |
|---|---|---|---|---|
| Voltage/system code | L-N | L-G | N-G | L-L |
| 208Y | 700 | 700 | 700 | 1000 |
| 480Y | 1200 | 1200 | 1200 | 1800 |
| 600Y | 1500 | 1500 | 1500 | 2500 |
| 240D | — | 1000 | — | 1000 |
| 480D | — | 1800 | — | 2000 |
| 600D | — | 2500 | — | 2500 |

## NEMA 1: Standard or Standard w/ Surge Counter

Catalog numbers ending with 2K or 3K.

### 120-200 kA

| | Protection mode | | | |
|---|---|---|---|---|
| Voltage/system code | L-N | L-G | N-G | L-L |
| 208Y | 600 | 800 | 600 | 1000 |
| 480Y | 1200 | 1200 | 1200 | 1800 |
| 600Y | 1500 | 1500 | 1500 | 2500 |
| 240D | — | 1000 | — | 1000 |
| 480D | — | 2500 | — | 2500 |
| 600D | — | 2500 | — | 2500 |

### 300 kA

| | Protection mode | | | |
|---|---|---|---|---|
| Voltage/system code | L-N | L-G | N-G | L-L |
| 208Y | 600 | 700 | 600 | 1000 |
| 480Y | 1000 | 1200 | 1000 | 1800 |
| 600Y | 1500 | 1500 | 1500 | 2500 |
| 240D | — | 1000 | — | 1000 |
| 480D | — | 1800 | — | 2000 |
| 600D | — | 2500 | — | 2500 |

### 400 kA

| | Protection mode | | | |
|---|---|---|---|---|
| Voltage/system code | L-N | L-G | N-G | L-L |
| 208Y | 600 | 700 | 600 | 1000 |
| 480Y | 1000 | 1200 | 1000 | 1800 |
| 600Y | 1500 | 1500 | 1500 | 2500 |
| 240D | — | 1000 | — | 1000 |
| 480D | — | 1800 | — | 2000 |
| 600D | — | 2500 | — | 2500 |

## Voltage protection ratings continued

### NEMA 4X: Basic

Catalog numbers ending with 1P.

**120–200 kA**

| Voltage/system code | Protection mode | | | |
|---|---|---|---|---|
| | L-N | L-G | N-G | L-L |
| 208Y | 700 | 800 | 700 | 1200 |
| 480Y | 1200 | 1200 | 1000 | 2000 |
| 600Y | 1500 | 1500 | 1500 | 2500 |
| 240D | — | 1000 | — | 1000 |
| 480D | — | 2000 | — | 2500 |
| 600D | — | 2500 | — | 2500 |

**300 kA**

| Voltage/system code | Protection mode | | | |
|---|---|---|---|---|
| | L-N | L-G | N-G | L-L |
| 208Y | 700 | 800 | 700 | 1200 |
| 480Y | 1200 | 1200 | 1200 | 2000 |
| 600Y | 1500 | 1500 | 1500 | 2500 |
| 240D | — | 1000 | — | 1000 |
| 480D | — | 1800 | — | 2000 |
| 600D | — | 2500 | — | 2500 |

**400 kA**

| Voltage/system code | Protection mode | | | |
|---|---|---|---|---|
| | L-N | L-G | N-G | L-L |
| 208Y | 700 | 800 | 700 | 1200 |
| 480Y | 1200 | 1200 | 1200 | 2000 |
| 600Y | 1500 | 1500 | 1500 | 2500 |
| 240D | — | 1000 | — | 1000 |
| 480D | — | 1800 | — | 2000 |
| 600D | — | 2500 | — | 2500 |

### NEMA 4X: Standard or Standard w/ Surge Counter

Catalog numbers ending with 2P or 3P.

**120–200 kA**

| Voltage/system code | Protection mode | | | |
|---|---|---|---|---|
| | L-N | L-G | N-G | L-L |
| 208Y | 900 | 900 | 700 | 1500 |
| 480Y | 1200 | 1200 | 1000 | 2500 |
| 600Y | 1500 | 1500 | 1500 | 2500 |
| 240D | — | 1000 | — | 1000 |
| 480D | — | 2500 | — | 2500 |
| 600D | — | 2500 | — | 2500 |

**300 kA**

| Voltage/system code | Protection mode | | | |
|---|---|---|---|---|
| | L-N | L-G | N-G | L-L |
| 208Y | 800 | 900 | 700 | 1500 |
| 480Y | 1200 | 1200 | 1000 | 2000 |
| 600Y | 1500 | 1500 | 1500 | 2500 |
| 240D | — | 1000 | — | 1000 |
| 480D | — | 2000 | — | 2000 |
| 600D | — | 2500 | — | 2500 |

**400 kA**

| Voltage/system code | Protection mode | | | |
|---|---|---|---|---|
| | L-N | L-G | N-G | L-L |
| 208Y | 800 | 900 | 700 | 1500 |
| 480Y | 1200 | 1200 | 1000 | 2000 |
| 600Y | 1500 | 1500 | 1500 | 2500 |
| 240D | — | 1000 | — | 1000 |
| 480D | — | 2000 | — | 2000 |
| 600D | — | 2500 | — | 2500 |

# 1-Pole, UL Type 1 DIN-Rail high SCCR surge protective devices

RoHS 2011/65/EU

## Dimensions — mm

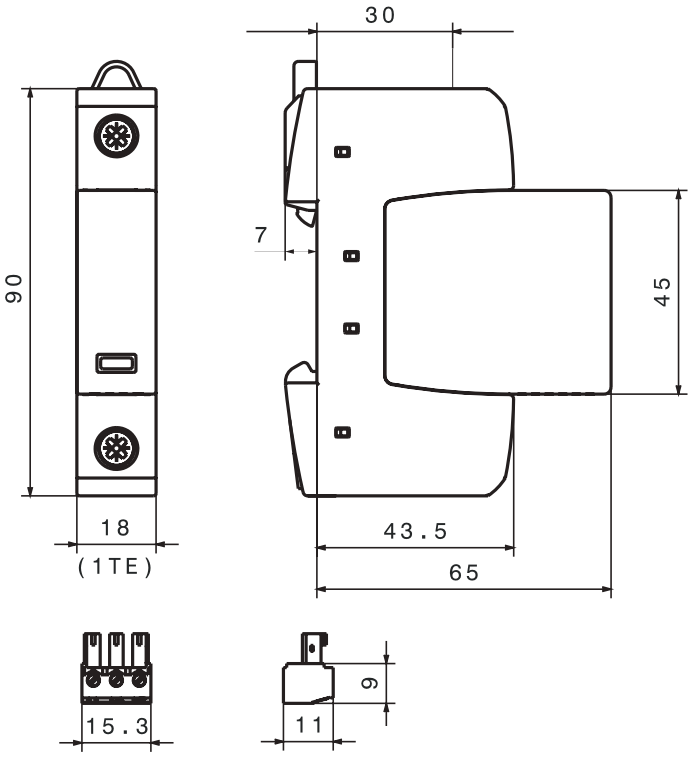


**Catalog symbol:**

- BSPMA1_S2GR

**Description:**

The Bussmann™ series one-pole DIN-Rail UL Listed Type 1 surge protective devices feature a high 200 kA SCCR. Replaceable arrestor modules are mechanically coded with the base to ensure against installing an incorrect replacement. The unique module locking system fixes the module to the base, and allows it to be easily replaced without tools by simply depressing the release buttons.

**Standard local visual status indication:**

The module's visual indicator shows the protective status at a glance: green = good, red = replace.

**Remote contact signaling:**

The standard three-pole terminal remote Form C contact signaling relay has a floating changeover contact for use as a break or make contact, according to circuit concept.

**Ratings:**

- System volts/types
  - 120 Vac single-phase
  - 240 Vac single-phase
- Short-circuit Current Rating (SCCR) 200 kA

**Agency information:**

- UL Listed open Type 1, ANSI/ UL 1449 4th Edition, Guide VZCA2, VZCA8
- CSA Type 4-1 Component Assembly, C22.2 No. 269.1-14, Class 2157-27
- RoHS compliant

**Mounting**

- 35mm Din-Rail

**Warranty**

- Five years

| Specifications/ordering information | | |
|---|---|---|
| System voltage/type | 120 Vac single-phase | 240 Vac single-phase |
| Catalog number | BSPMA1120S2GR | BSPMA1240S2GR |
| Replacement module catalog number (qty.) | BPMA230UL (1) | BPMA385UL (1) |
| SPD class per ANSI/UL 1449 4th Ed. | Open-Type 1 SPD | |
| SPD class per CSA - C22.2 No. 269.1-14 | Type 4-1 Component Assembly | |
| Nominal system voltage ($U_N$) [L-N/L-G] | 127 Vac | 277 Vac |
| Nominal power frequency | 50 / 60 Hz | |
| Max. continuous operating voltage AC (MCOV) [L-L] | 230 Vac | 385 Vac |
| Nominal discharge current ($I_n$) (8x20µs) | 20 kA | |
| Max. discharge current ($I_{max}$) (8/20) | 50 kA | |
| Voltage Protection Rating (VPR) [L-L] | 700 $V_{pk}$ | 1200 $V_{pk}$ |
| Short Circuit Current Rating (SCCR) | 200 kA | |
| Operating temperature range ($T_U$) °F (°C) | -31 to 185 (-35 to 85) | |
| Operating state / fault indication | Green = good ; Red = replace | |
| Wire range (60/75°C Cu, solid/stranded) | 2-14 AWG (2.5-35 $mm^2$) | |
| Terminal torque — lb-in (N•m) | 35-45 (4-5.1) | |
| Mounting | 35 mm DIN-Rail per EN 60715 | |
| Enclosure material | Thermoplastic, UL 94 V0 | |
| Protection | IP20 (finger-safe) | |
| Capacity | 1 module(s), DIN 43880 | |
| Agency information | UL Listed, Guide VZCA2, VZCA8/CSA Component Assembly, Class 2157-27, RoHS | |
| Weight - oz (g) | 4.13 (117) | 4.44 (126) |
| **Contact signaling** | | |
| Signaling type | Floating (dry), Form C (SPDT) | |
| NEC Circuits | NEC Class 2 circuits only | |
| Switching capacity AC (DC) | 250 V/5 A (250 V/0.1 A, 125 V/0.2 A, 75 V/0.5 A) | |
| Wire range (60/75°C Cu, solid/stranded) | 16-22 AWG (1.5-0.34$mm^2$) | |
| Terminal torque - lb-in (N•m) | 1.8 (0.2) | |

**Typical installation/system application:**

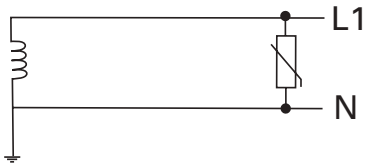


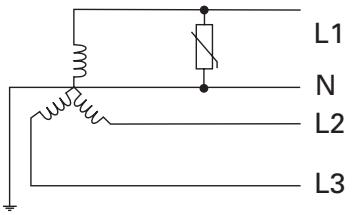


**Data sheet no. 10771**

## 2-Pole, UL Type 1 DIN-Rail high SCCR surge protective devices

RoHS 2011/65/EU

**Catalog symbol:**

- BSPMA2_S3GR

**Description:**

The Bussmann™ series two-pole DIN-Rail UL Listed Type 1 surge protective devices feature a high 200 kA SCCR. Replaceable arrestor modules are mechanically coded with the base to ensure against installing an incorrect replacement. The unique module locking system fixes the module to the base, and allows it to be easily replaced without tools by simply depressing the release buttons.

**Standard local visual status indication:**

The module's visual indicator shows the protective status at a glance: green = good, red = replace.

**Remote contact signaling:**

**The standard three-pole terminal remote Form C contact signaling relay has a floating changeover contact for use as a break or make contact, according to circuit concept.**

**Ratings:**

- System volts/types
  - 120/240 Vac split-phase
  - 240/480 Vac split-phase
- Short-circuit Current Rating (SCCR) 200 kA

**Agency information:**

- UL Listed open Type 1, ANSI/ UL 1449 4th Edition, Guide VZCA2, VZCA8
- CSA Type 4-1 Component Assembly, C22.2 No. 269.1-14, Class 2157-27
- RoHS compliant

**Mounting**

- 35mm Din-Rail

**Warranty**

- Five years

**Dimensions — mm**

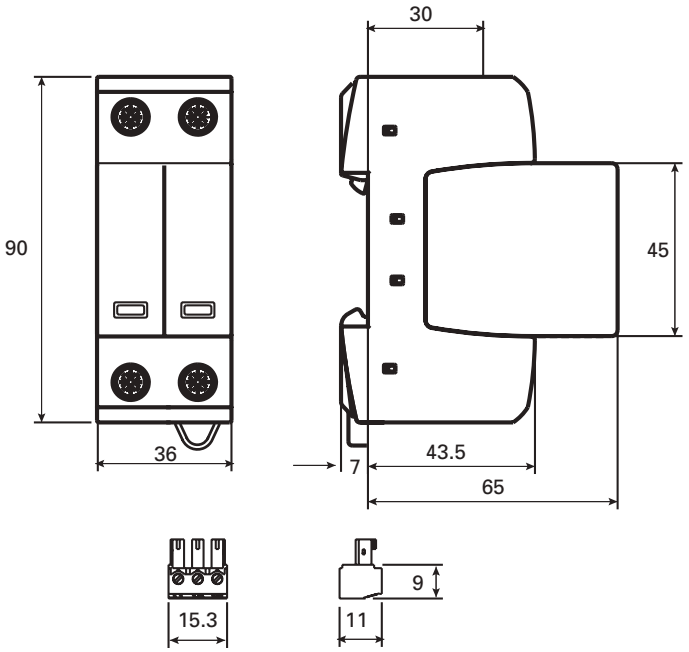




**Data sheet no. 10772**

| Specifications/ordering information | | |
|---|---|---|
| System voltage/type | 120/240 Vac split-phase | 240/480 Vac split-phase |
| Catalog number | BSPMA2240S3GR | BSPMA2480S3GR |
| Replacement module catalog number (qty.) | BPMA230UL (2) | BPMA385UL (2) |
| SPD class per ANSI/UL 1449 4th Ed. | Open-Type 1 SPD | |
| SPD class per CSA - C22.2 No. 269.1-14 | Type 4-1 Component Assembly | |
| Nominal system voltage ($U_N$) [L-G] / [L-L] | 127 Vac / 254 Vac | 240 Vac / 480 Vac |
| Nominal power frequency | 50 / 60 Hz | |
| Max. continuous operating voltage AC (MCOV) [L-G] / [L-L] | 230 Vac / 460 Vac | 385 Vac / 770 Vac |
| Nominal discharge current ($I_n$) (8x20µs) | 20 kA | |
| Max. discharge current ($I_{max}$) (8/20) | 50 kA | |
| Voltage Protection Rating (VPR) [L-G] / [L-L] | 700 $V_{pk}$ / 1500 $V_{pk}$ | 1200 $V_{pk}$ / 2500 $V_{pk}$ |
| Short Circuit Current Rating (SCCR) | 200 kA | |
| Operating temperature range ($T_U$) °F (°C) | -31 to 185 (-35 to 85) | |
| Operating state / fault indication | Green = good ; Red = replace | |
| Wire range (60/75°C Cu, solid/stranded) | 2-14 AWG (2.5-25 mm²) | |
| Terminal torque — lb-in (N•m) | 35-45 (4-5.1) | |
| Mounting | 35mm DIN-Rail per EN 60715 | |
| Enclosure material | Thermoplastic, UL 94 V0 | |
| Protection | IP20 (finger-safe) | |
| Capacity | 2 module(s), DIN 43880 | |
| Agency information | UL Listed, Guide VZCA2, VZCA8/CSA Component Assembly, Class 2157-27, RoHS | |
| Weight - oz (g) | 7.94 (225) | 8.57 (243) |
| **Contact signaling** | | |
| Signaling type | Floating (dry), Form C (SPDT) | |
| NEC® Circuits | NEC Class 2 circuits only | |
| Switching capacity AC (DC) | 250 V/5 A (250 V/0.1 A, 125 V/0.2 A, 75 V/0.5 A) | |
| Wire range (60/75 °C Cu, solid/stranded) | 16-22 AWG (1.5-0.34mm²) | |
| Terminal torque — lb-in (N•m) | 1.8 (0.2) | |

**Typical installation/system application:**

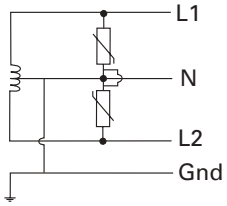


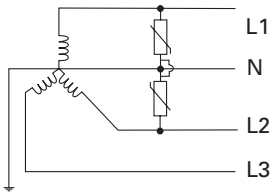


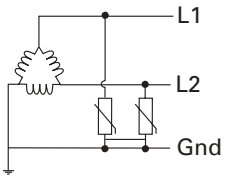


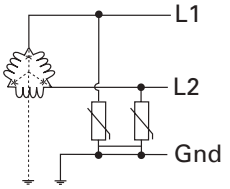


**Data sheet no. 10772**

## 3-Pole, UL Type 1 DIN-Rail high SCCR surge protective devices

RoHS 2011/65/EU

### Catalog symbol:

- BSPMA3_WYGR
- BSPMA3_DLGR

### Description:

The Bussmann™ series three-pole DIN-Rail UL Listed Type 1 surge protective devices feature a high 200 kA SCCR. Replaceable arrestor modules are mechanically coded with the base to ensure against installing an incorrect replacement. The unique module locking system fixes the module to the base, and allows it to be easily replaced without tools by simply depressing the release buttons.

### Standard local visual status indication:

The module's visual indicator shows the protective status at a glance: green = good, red = replace.

### Remote contact signaling:

The standard three-pole terminal remote Form C contact signaling relay has a floating changeover contact for use as a break or make contact, according to circuit concept.

### Ratings:

- System volts/types
  - 120/208 Vac 3-phase Wye
  - 277/480 Vac 3-phase Wye
  - 347/600 Vac 3-phase Wye
  - 240 Vac 3-phase Delta
  - 480 Vac 3-phase Delta
- Short-circuit Current Rating (SCCR) 200 kA

### Agency information:

- UL Listed open Type 1, ANSI/ UL 1449 4th Edition, Guide VZCA2, VZCA8
- CSA Type 4-1 Component Assembly, C22.2 No. 269.1-14, Class 2157-27
- RoHS compliant

### Mounting

- 35mm Din-Rail

### Warranty

- Five years

### Dimensions — mm

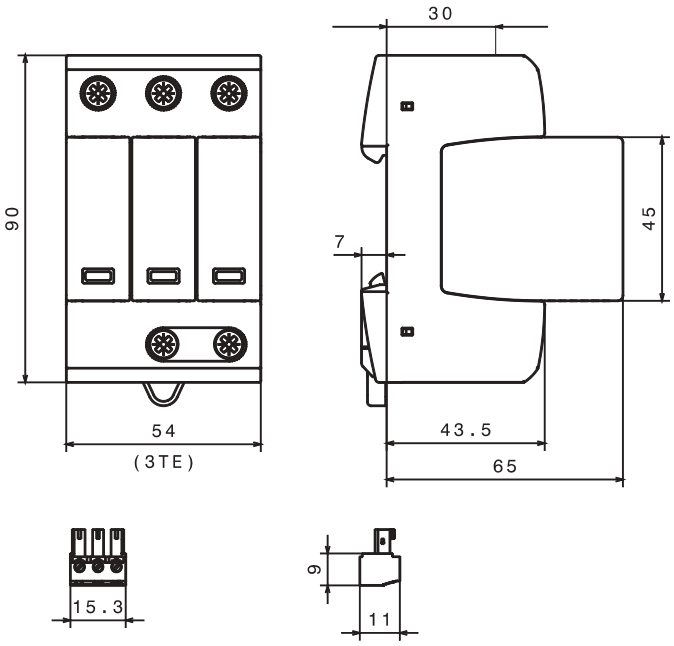


Data sheet no. 10773

| Specifications/ordering information | | | | | |
|---|---|---|---|---|---|
| System voltage/type | 120/208 Vac 3-phase Wye | 277/480 Vac 3-phase Wye | 347/600 Vac 3-phase Wye | 240 Vac 3-phase Delta | 480 Vac 3-phase Delta |
| Catalog number | BSPMA3208WYGR | BSPMA3480WYGR | BSPMA3600WYGR | BSPMA3240DLGR | BSPMA3480DLGR |
| Replacement module catalog number (qty.) | BPMA180UL (3) | BPMA385UL (3) | BPMA510UL (3) | BPMA275UL (3) | BPMA550UL (3) |
| SPD class acc. to ANSI/UL 1449 4th Ed. | Open-Type 1 SPD | | | | |
| SPD class acc. to CSA - C22.2 No. 269.1-14 | Type 4-1 Component Assembly | | | | |
| Nominal system voltage ($U_N$) [L-G] / [L-L] | 120 Vac / 208 Vac | 277 Vac / 480 Vac | 347 Vac / 600 Vac | 240 Vac / 240 Vac | 480 Vac / 480 Vac |
| Nominal power frequency | 50 / 60 Hz | | | | |
| Max. continuous operating voltage AC (MCOV) [L-G] / [L-L] | 180 Vac / 360 Vac | 385 Vac / 770 Vac | 510 Vac / 1020 Vac | 275 Vac / 550 Vac | 550 Vac / 1100 Vac |
| Nominal discharge current ($I_n$) (8x20µs) | 20 kA | | | | |
| Max. discharge current ($I_{max}$) (8/20) | 50 kA | | | | |
| Voltage Protection Rating (VPR) [L-G] / [L-L] | 600 $V_{pk}$ / 1200 $V_{pk}$ | 1200 $V_{pk}$ / 2500 $V_{pk}$ | 1500 $V_{pk}$ / 3000 $V_{pk}$ | 800 $V_{pk}$ / 1500 $V_{pk}$ | 1800 $V_{pk}$ / 3000 $V_{pk}$ |
| Short Circuit Current Rating (SCCR) | 200 kA | | | | |
| Operating temperature range ($T_U$) °F (°C) | -31 to 185 (-35 to 85) | | | | |
| Operating state / fault indication | Green = good ; Red = replace | | | | |
| Wire range (60/75°C Cu, solid/stranded) | 4-14 AWG (2.5-25 $mm^2$) | | | | |
| Terminal torque | 35-45 (4-5.1) | | | | |
| Mounting | 35 mm DIN-Rail per EN 60715 | | | | |
| Enclosure material | Thermoplastic, UL 94 V0 | | | | |
| Protection | IP20 (finger-safe) | | | | |
| Capacity | 3 module(s), DIN 43880 | | | | |
| Agency information | UL Listed, Guide VZCA2, VZCA8/CSA Component Assembly, Class 2157-27, RoHS | | | | |
| Weight - oz (g) | 10.93 (310) | 12.24 (347) | 13.05 (370) | 11.46 (325) | 13.4 (380) |
| **Contact signaling** | | | | | |
| Signaling type | Floating (dry), Form C (SPDT) | | | | |
| NEC Circuits | NEC Class 2 circuits only | | | | |
| Switching capacity AC (DC) | 250 V/5 A (250 V/0.1 A, 125 V/0.2 A, 75 V/0.5 A) | | | | |
| Wire range (60/75°C Cu, solid/stranded) | 16-22 AWG (1.5-0.34$mm^2$) | | | | |
| Terminal torque - lb-in (N•m) | 1.8 (0.2) | | | | |

**Typical installation/system application:**

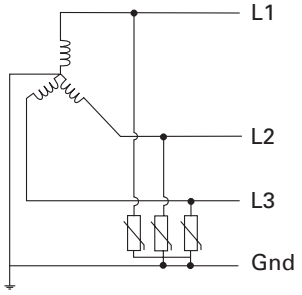


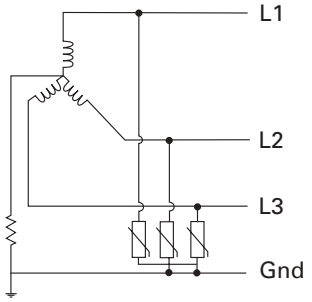


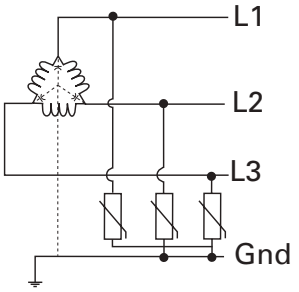


**Data sheet no. 10773**

## 4-Pole, UL Type 1 DIN-Rail high SCCR surge protective devices

RoHS 2011/65/EU

**Dimensions — mm**

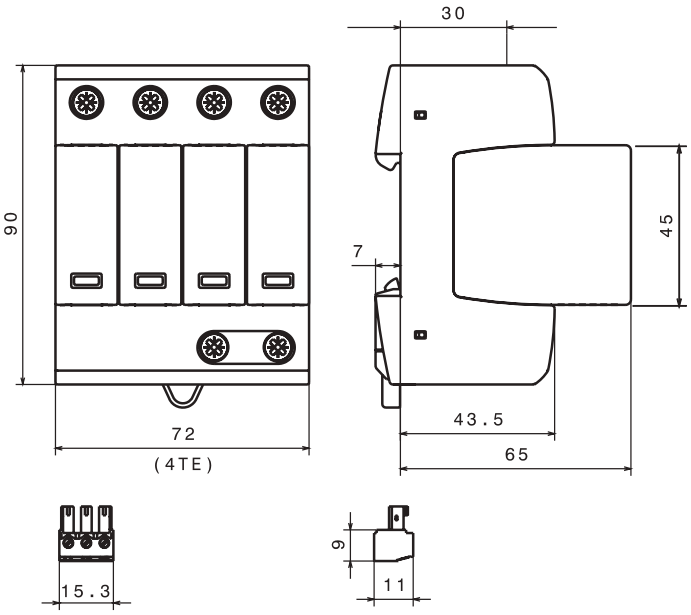


**Catalog symbol:**

- BSPMA4_WYNGR

**Description:**

The Bussmann™ series four-pole DIN-Rail UL Listed Type 1 surge protective devices feature a high 200 kA SCCR. Replaceable arrestor modules are mechanically coded with the base to ensure against installing an incorrect replacement. The unique module locking system fixes the module to the base, and allows it to be easily replaced without tools by simply depressing the release buttons.

**Standard local visual status indication:**

The module's visual indicator shows the protective status at a glance: green = good, red = replace.

**Remote contact signaling:**

The standard three-pole terminal remote Form C contact signaling relay has a floating changeover contact for use as a break or make contact, according to circuit concept.

**Ratings:**

- System volts/types
  - 120/208 Vac 3-phase Wye
  - 277/480 Vac 3-phase Wye
- Short-circuit Current Rating (SCCR) 200 kA

**Agency information:**

- UL Listed open Type 1, ANSI/ UL 1449 4th Edition, Guide VZCA2, VZCA8
- CSA Type 4-1 Component Assembly, C22.2 No. 269.1-14, Class 2157-27
- RoHS compliant

**Mounting**

- 35mm Din-Rail

**Warranty**

- Five years



**Data sheet no. 10774**

| Specifications/ordering information | System volts/catalog no. | |
|---|---|---|
| System voltage/type | 120/208 Vac 3-phase Wye | 277/480 Vac 3-phase Wye |
| Catalog number | BSPMA4208WYNGR | BSPMA4480WYNGR |
| Replacement module catalog number (qty.) | BPMA180UL (4) | BPMA385UL (3), BPMA180UL (1) |
| SPD class acc. to ANSI/UL 1449 4th Ed. | Open-Type 1 SPD | |
| SPD class acc. to CSA - C22.2 No. 269.1-14 | Type 4-1 Component Assembly | |
| Nominal system voltage ($U_N$) [L-N] / [L-G] / [L-L] / [N-G] | 120 Vac / 120 Vac / 208 Vac / 0 Vac | 277 Vac / 277 Vac / 480 Vac / 0 Vac |
| Nominal power frequency | 50 / 60 Hz | |
| Max. continuous operating voltage AC (MCOV) [L-N] / [L-G] / [L-L] / [N-G] | 180 Vac / 360 Vac / 360 Vac / 180 Vac | 385 Vac / 565 Vac / 770 Vac / 180 Vac |
| Nominal discharge current ($I_n$) (8x20µs) | 20 kA | |
| Max. discharge current ($I_{max}$) (8/20) | 50 kA | |
| Voltage Protection Rating (VPR) [L-N] / [L-G] / [L-L] / [N-G] | 600 $V_{pk}$ / 1200 $V_{pk}$ / 1200 $V_{pk}$ / 600 $V_{pk}$ | 1200 $V_{pk}$ / 1800 $V_{pk}$ / 2500 $V_{pk}$ / 600 $V_{pk}$ |
| Short Circuit Current Rating (SCCR) | 200 kA | |
| Operating temperature range ($T_U$) °F (°C) | -31 to 185 (-35 to 85) | |
| Operating state / fault indication | Green = good ; Red = replace | |
| Wire range (60/75°C Cu, solid/stranded) | 4-14 AWG (2.5-25 $mm^2$) | |
| Terminal torque — lb-in (N•m) | 35-45 (4-5.1) | |
| Mounting | 35 mm DIN-Rail per EN 60715 | |
| Enclosure material | Thermoplastic, UL 94 V0 | |
| Protection | IP20 (finger-safe) | |
| Capacity | 4 module(s), DIN 43880 | |
| Agency information | UL Listed, Guide VZCA2, VZCA8/CSA Component Assembly, Class 2157-27, RoHS | |
| Weight - oz (g) | 13.9 (394) | 15.24 (432) |
| **Contact signaling** | | |
| Signaling type | Floating (dry), Form C (SPDT) | |
| NEC Circuits | NEC Class 2 circuits only | |
| Switching capacity AC (DC) | 250 V/5 A (250 V/0.1 A, 125 V/0.2 A, 75 V/0.5 A) | |
| Wire range (60/75°C Cu, solid/stranded) | 16-22 AWG (1.5-0.34$mm^2$) | |
| Terminal torque - lb-in (N•m) | 1.8 (0.2) | |

**Typical installation/system application:**

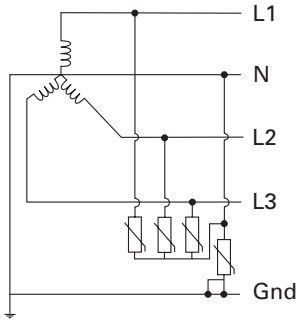


**Data sheet no. 10774**

## BSPM1A_ _ _ _LV(R) low voltage power SPDs

The Bussmann series UL Type 4, 75 Vac/100 Vdc, 120 Vac/200 Vdc single pole, modular surge arresters feature local, *easy*ID™ visual indication and remote contact signaling. The unique module locking system fixes the protection module to the base part. Modules can be easily replaced without tools by simply depressing the release buttons. Integrated mechanical coding between the base and protection module ensures against installing an incorrect replacement module.

RoHS 2011/65/EU

### LV power system arresters

The features of these single-pole devices are for use as a single device or in combination with other devices for AC and DC voltage systems.

- Surge arrester according to UL 1449 4th Edition, Type 4 Component Assembly for use in Type 2 applications helps meet UL 508A requirements*
- Proven MOV technology for reliable surge protection
- "Thermo Dynamic Control" SPD monitoring device ensures high reliability against surge events
- Module locking system with module release button make module replacement easy without tools
- Remote signaling of all protection modules make status monitoring easy and accurate in any monitoring scheme
- No additional upstream overcurrent protection necessary to make installation easier and more economical
- Vibration and shock tested according to EN 60068-2 to withstand harsh environments

* Except as noted in data sheet no. 2056.

### Remote signaling Form C contact

The remote signaling contact versions have a floating changeover contact for use as a break or make contact for easy adoption in any monitoring application.

### Dimensions — mm

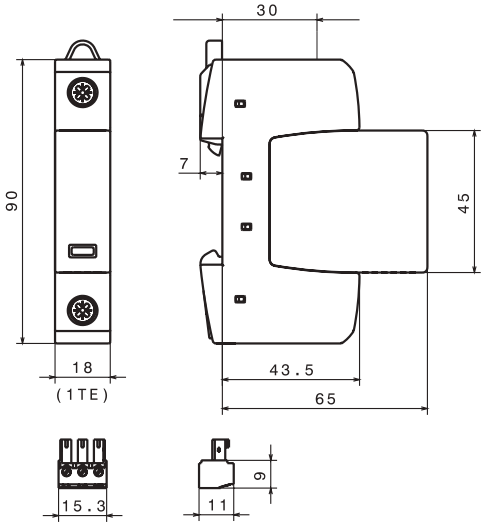

## Catalog numbers and specifications

| Ordering information — for 75 Vac/100 Vdc to 120 Vac/200 Vdc | | System volts/catalog no. | |
|---|---|---|---|
| System voltage | | 75 Vac/100 Vdc | 120 Vac/200 Vdc |
| Catalog no. (base + modules) | With remote signaling | BSPM1A75D100LVR | BSPM1A150D200LVR |
| Replacement modules | | BPMA75D100LV | BPMA150D200LV |
| **Specifications** | | | |
| Max. continuous operating AC voltage [$V_C$] | | 75 Vac | 150 Vac |
| Voltage protection level [VPL] | | ≤0.4 kV | ≤0.7 kV |
| Voltage protection level at 5 kA [VPL] | | ≤0.35 kV | ≤0.55 kV |
| Max. continuous operating DC voltage [$V_C$] | | 100 Vdc | 200 Vdc |
| Nominal discharge current (8/20µs) [$I_n$] AC | | 10 kA | 15 kA |
| Nominal discharge current (8/20µs) [$I_n$] DC | | 10 kA | 12.5 kA |
| Surge current capacity(8/20µs) [$I_{max}$] | | 40 kA | 40 kA |
| Temporary overvoltage (TOV) | | 90 V / 5 sec. | 175 V / 5 sec. |
| Agency information* | | UL / cUL, CSA, KEMA | UL / cUL, CSA, KEMA |
| **Specifications — all catalog numbers** | | | |
| SPD according to EN 61643-11 | | Type 2 | |
| SPD according to IEC 61643-1 | | Class II | |
| Response time [$t_A$] | | ≤25ns | |
| TOV characteristics | | Withstand | |
| Operating temperature range [$T_U$] | | -40°C to +80°C | |
| Operating state/fault indication | | Green (good) / red (replace) | |
| Number of ports | | 1 | |
| Cross-sectional area (minimum) | | 14 AWG solid/stranded | |
| Cross-sectional area (maximum) | | 1 AWG solid — 2 AWG stranded | |
| Mounting | | 35mm DIN-Rail per EN 60715 | |
| Enclosure material | | Thermoplastic, UL 94V0 | |
| Location category | | Indoor | |
| Degree of protection | | IP20 | |
| Capacity | | 1 module, DIN 43880 | |
| Warranty | | Five years** | |
| **Remote contact signaling** | | | |
| Remote contact signaling type | | Changeover contact | |
| AC switching capacity (volts/amps) | | 250 V/0.5 A | |
| DC switching capacity (volts/amps) | | 250 V/0.1 A; 125 V/0.2 A; 75 V/0.5 A | |
| Conductor ratings / cross-sectional area for remote contact signal terminals | | 60/75°C Max. 14 AWG solid/stranded | |
| Ordering information | | Order from catalog numbers above | |

* Agency information not applicable to DC ratings.
**See Limited Warranty Statement 3A1502 for details at Eaton.com/bussmannseries.

**Data sheet no. 2056**

## BSPH2A_ _ _ _LVR low voltage control SPDs

The Bussmann series UL Type 4 24 Vac/dc, 48 Vac/dc, 60 Vac/dc, 120 Vac/dc and 230 Vac/dc, two-pole, modular surge arresters feature local, *easy*ID visual indication and remote contact signaling. The unique module locking system fixes the protection module to the base part. Modules can be easily replaced without tools by simply depressing the release buttons. Integrated mechanical coding between the base and protection module ensures against installing an incorrect replacement module.

### LV system arresters

The features of these two-pole devices are for use in coordination with other upstream SPDs in UL 508A Applications*.

- Surge arrester according to UL 1449 4th Edition, Type 4 Component Assembly for use in Type 3 applications helps meet UL 508A requirements
- Proven MOV and GDT hybrid technology for reliable surge protection
- "Thermo Dynamic Control" SPD monitoring device ensures high reliability against surge events
- Module locking system with module release button make module replacement easy without tools
- Remote signaling on all protection modules make status monitoring easy and accurate in any monitoring scheme
- No additional upstream overcurrent protection needed so installation is easier and more economical
- Vibration and shock tested according to EN 60068-2 to withstand harsh environments

* UL 1449 4th Edition not applicable to DC voltages.

### Remote signaling Form C contact

Remote signaling has a floating changeover contact for use as a break or make contact for easy application in any monitoring system.

### Dimensions — mm

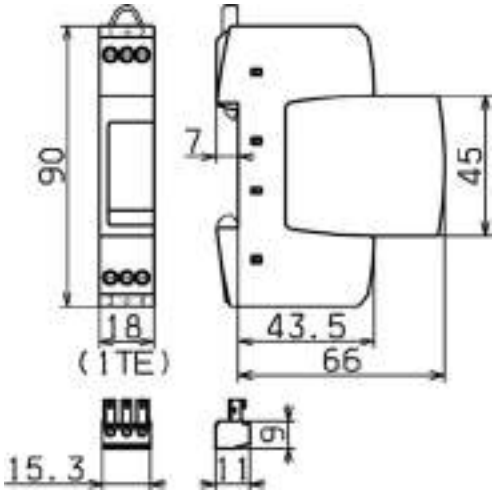

## Catalog numbers and specifications

| Ordering information | System volts/catalog no. | | |
|---|---|---|---|
| System voltage | 24 Vac/dc | 48 Vac/dc | 120 Vac/dc |
| Max. continuous operating AC voltage (MCOV) [$V_C$] | 30 Vac/dc | 60 Vac/dc | 150 Vac/dc |
| Catalog no.(base + modules) | BSPH2A24D24LVR | BSPH2A48D48LVR | BSPH2A150D150LVR |
| Replacement Modules | BPHA24D24LV | BPHA48D48LV | BPHA150D150LV |
| **Specifications** | | | |
| Nominal AC voltage [$V_o$] | 24 V | 48 V | 120 V |
| Max. continuous operating AC voltage [$V_C$] | 30 V | 60 V | 150 V |
| Max. continuous operating DC voltage [$V_C$] | 30 V | 60 V | 150 V |
| Nominal discharge current (8/20µs) [$I_n$] | 1 kA | 1 kA | 2 kA |
| Total discharge current (8/20µs) [L+N-Gnd] [$I_{total}$] | 2 kA | 2 kA | 4 kA |
| Nominal load current AC [$I_L$] | 25 A | 25 A | 25 A |
| Combined impulse [$U_{OC}$] | 2 kV | 2 kV | 4 kV |
| Combined impulse [L+N-Gnd] [$U_{OC}$ total] | 4 kV | 4 kV | 8 kV |
| Voltage protection level [L-N] [VPL] | ≤180 V | ≤350 V | ≤640 V |
| Voltage protection level [L/N-Gnd] [VPL] | ≤630 V | ≤730 V | ≤800 V |
| SPD according to EN 61643-11 | Type 3 | | |
| SPD according to IEC 61643-1 | Class III | | |
| Response time [L-N] [$t_A$] | ≤25ns | | |
| Response time [L/N-Gnd] [$t_A$] | ≤100ns | | |
| Operating temperature range [$T_U$] | -40°C to +80°C | | |
| Operating state/fault indication | Green (good) / red (replace) | | |
| Number of ports | 1 | | |
| Cross-sectional area (min.) | 18 AWG solid/stranded | | |
| Cross-sectional area (max.) | 10 AWG solid/12 AWG stranded | | |
| For mounting on | 35mm DIN-Rail per EN 60715 | | |
| Enclosure material | Thermoplastic, UL 94V0 | | |
| Location category | Indoor | | |
| Degree of protection | IP20 | | |
| Capacity | 1 Module, DIN 43880 | | |
| Agency information* | UL / cUL, CSA, KEMA | | |
| Product warranty | Five years** | | |
| **Remote contact signaling** | | | |
| Remote contact signaling type | Changeover contact | | |
| AC switching capacity (volts/amps) | 250 V/0.5 A | | |
| DC switching capacity (volts/amps) | 250 V/0.1 A; 125 V/0.2 A; 75 V/0.5 A | | |
| Conductor ratings and cross-sectional area for remote contact signal terminals | 60/75°C Max. 14 AWG solid/stranded | | |
| Ordering information | Order from catalog numbers above | | |

* Agency information not applicable to DC ratings.
**See Limited Warranty Statement 3A1502 for details at Eaton.com/bussmannseries.

**Data sheet no. 2057**

## BSPD48RJ45 DIN-Rail RJ45/Ethernet cable SPD

The Bussmann series DIN-Rail mount BSPD48RJ45 Surge Protective Device (SPD) is a UL Listed 497B universal DIN-Rail mount surge protective device for RJ45/Ethernet cable systems. It is easy to install or retrofit Ethernet cable systems with RJ connectors.

The BSPD48RJ45 is installed between the patch panel and the active component (a switch for example). The snap-in mechanism of the supporting foot allows the SPD to be safely grounded via the DIN-Rail. For single applications, the BSPD48RJ45 comes with a supplied mounting bracket with cable lug.

Fulfilling the requirements of Category 6, the BSPD48RJ45 can be universally used for all data services up to nominal voltages of 48 V. It is well suited for existing services such as Gigabit Ethernet, ATM, ISDN, Voice over IP and Power over Ethernet (PoE+ acc. to IEEE 802.3at up to 57 V) and similar applications in structured cabling systems according to Class E up to 250 MHz. Protection of all pairs by means of powerful gas discharge tubes and one adapter filter matrix per pair.

- UL 497B Listed
- Easy to install or retrofit for protection of all lines
- CAT 6 according to ISO/IEC 11801
- CAT 6 in the channel (Class E)
- Power over Ethernet (PoE+ according to IEEE 802.3at)

### DIN-Rail RJ45 SPDs applications

| Catalog no. | BSPD48RJ45 |
|---|---|
| **Bus systems, and measuring and control technology** | |
| Industrial Ethernet | X |
| **Data networks** | |
| ATM | X |
| Ethernet 10/100/1000 | X |
| FDDI, CDDI | X |
| Industrial Ethernet | X |
| Power over Ethernet (PoE) | X |
| Token Ring | X |
| VG any LAN | X |
| **Video systems** | |
| Video (2 wire) | X |

### Dimensions — mm

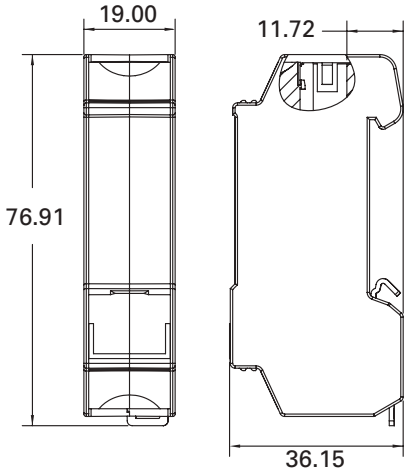


### Catalog numbers and specifications

| Catalog no. | BSPD48RJ45 |
|---|---|
| Nominal voltage ($U_N$) | 48 V |
| Max. continuous operating DC voltage ($U_C$) | 48 V |
| Max. continuous operating AC voltage ($U_C$) | 34 V |
| Max. continuous DC voltage pair-pair (PoE) ($U_C$) | 57 V |
| Nominal current ($I_L$) | 1 A |
| C2 Nominal discharge current (8/20µs) line-line ($I_n$) | 150 A |
| C2 Nominal discharge current (8/20µs) line-PG ($I_n$) | 2.5 kA |
| C2 Total nominal discharge current (8/20µs) line-PG ($I_n$) | 10 kA |
| C2 Nominal discharge current (8/20µs) pair-pair (PoE) ($I_n$) | 150 A |
| Voltage protection level line-line for In C2 ($U_P$) | ≤190 V |
| Voltage protection level line-PG for In C2 ($U_P$) | ≤600 V |
| Voltage protection level line-line for In C2 (PoE) ($U_P$) | ≤600 V |
| Voltage protection level line-line at 1 kV/µs C3 ($U_P$) | ≤180 V |
| Voltage protection level line-PG at 1 kV/µs C3 ($U_P$) | ≤500 V |
| Voltage protection level pair-pair at 1 kV/µs C3 (PoE) ($U_P$) | ≤600 V |
| Insertion loss at 250MHz | ≤3 dB |
| Capacitance line-line (C) | ≤30pF |
| Capacitance line-PG (C) | ≤25pF |
| Operating temperature range | -40°C to +80°C |
| Degree of protection | IP10 |
| Mounting | 35mm DIN-Rail per EN 60715 |
| Connection (input / output) | RJ45 socket / RJ45 socket |
| Pinning | 1 / 2, 3 / 6, 4 / 5, 7 / 8 |
| Grounding | Via 35mm DIN-Rail per EN 60715 |
| Enclosure material | Die cast zinc |
| Color | Bare surface |
| Test standards | IEC 61643-21 / EN 61643-21 |
| Agency information | UL 497B |
| Warranty | Five years* |

* See Limited Warranty Statement 3A1502 for details at Eaton.com/bussmannseries.

## BSPD_DING_ DIN-Rail 4 wire SPDs

The Bussmann series universal four-pole, DIN-Rail mounted surge arrester is UL Listed 497B DIN-Rail mount universal surge protective device. It requires minimum space, while providing effective protection for the stringent requirements of measuring and control circuits, and bus systems.

To ensure safe operation, the arrester provides protection against vibration and shock up to a 30-fold acceleration of gravity. The device's function-optimized design allows quick and easy protection module removal via "make-before-break" terminals that assure data signal continuity in the protected and unprotected state.

For IEC Applications - Instruction for Surge Protective Device Use In Zone 2 Explosive Atmospheres per ATEX.

1. When installed in potentially explosive atmospheres, the Data Signal SPD shall be installed into an enclosure which meets the requirements of a recognized type of protection, in accordance with EN 60079-0.
2. The Data Signal DIN SPD as transient suppressor. This approval applies to the following equipment types:
   - BSPD5DINLHF

### Ambient and temperature class

- -40°C to 80°C, T4: DEKRA 12ATEX0254 X: II 3 G Ex nA IIC T4 Gc
- Standards used for: ATEX: EN60079-0: 2009, EN 60079-15: 2005

- UL 497B Listed
- Function-optimized design for safe use and easy installation
- Four-pole and base mounts on grounded 35mm DIN-Rail
- Module removal without signal interruption via "make-before-break" circuitry

### Dimensions — mm

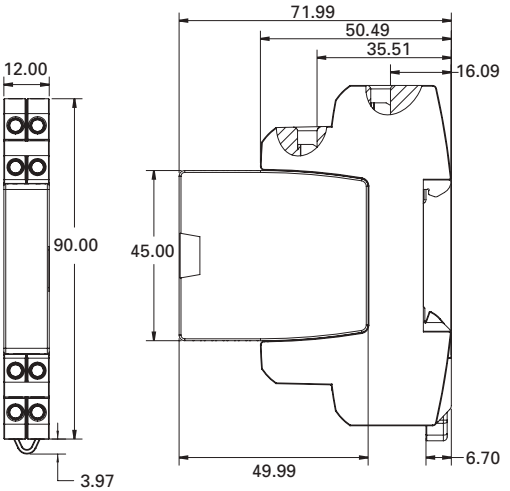


### DIN-Rail universal 4 wire data signal SPD applications

**Universal 4 wire data signal SPD is specified by communication technology.**

**The table below contains the specific technology to which the BSPD5DINLHF is suited to be used.**

| System type |
|---|
| Bus systems and measuring, and control technology |
| CAN-Bus (data line only) |
| C-Bus (Honeywell) |
| Device Net (data line only) |
| FSK |
| IEC-Bus (RS485) |
| Interbus INLINE, |
| LON - TP/XF 78 |
| MODBUS |
| MPI Bus |
| Procontic T200 (RS422) |
| PROFIBUS DP/FMS |
| PROFIBUS SIMATIC NET |
| PSM EG RS422 & RS485 |
| Rackbus (RS485) |
| R Bus |
| RS 485 |
| RS422, V11 |
| SafetyBUS p |
| Securilan LON Bus |
| SUCONET |

**The table below contains the specific technology to which the BSPD24DING is suited to be used.**

| System type |
|---|
| Bus systems and measuring, and control technology |
| 0-20mA, 4-20mA signals |
| Binary signals |
| TTYy 4-20mA |

**Data sheet no. 2161**

## Catalog numbers and specifications

| Catalog number | BSPD24DING | BSPD5DINLHF |
|---|---|---|
| Nominal voltage ($U_N$) | 24 V | 5 V |
| Nominal current at 45°C ($I_L$) | 0.75 A | 1.0 A |
| VPL line-line for limp D1 ($U_p$) | ≤102 V | ≤25 V |
| VPL line-PG for limp D1 ($U_p$) | ≤66 V | ≤550 V |
| VPL line-line at 1 kV/µs C3 ($U_p$) | ≤90 V | ≤11 V |
| VPL line-PG at 1 kV/µs C3 ($U_p$) | ≤45 V | ≤550 V |
| D1 Total lightning impulse current (10/350 µs) ($I_{imp}$) | 10 kA | 10 kA |
| D1 Lightning impulse current (10/350 µs) per line ($I_{imp}$) | 2.5 kA | 2.5 kA |
| C2 Total nominal discharge current (8/20µs) ($I_n$) | 20 kA | 20 kA |
| C2 Nominal discharge current (8/20µs) per line ($I_n$) | 10 kA | 10 kA |
| Series impedance per line | 1.8 Ω | 1.0 Ω |
| Max. continuous operating DC voltage ($U_C$) | 33 V | 6 V |
| Max. continuous operating AC voltage ($U_C$) | 23.3 V | 4.2 V |
| Cut-off frequency line-PG ($f_G$) | 6.8 MHz | 100 MHz |
| Capacitance line-line (C) | ≤0.5 nF | ≤25 pF |
| Capacitance line-PG (C) | ≤1.0 nF | ≤16 pF |
| ATEX Approvals | † | † |
| Agency information | †† | †† |
| IEC 61643-21 test category | D1, C2, C3 | |
| Operating temperature range | -40°C to +80°C | |
| Degree of protection | IP20 | |
| For mounting on | 35mm DIN-Rails per EN 60715 | |
| Grounding | Via base part | |
| Color / enclosure material | Grey / Polyamide PA 6.6 | |
| Test standards | IEC 61643-21 / EN 61643-21, UL 497B | |
| Connection (input / output) | Screw terminal | |
| Conductors | Solid: 12-28 AWG (4-0.08 mm²) | |
| | Flexible: 14-28A WG (2.5-0.08 mm²) | |
| Terminal torque | 3.5 Lb-In (0.4 N•m) | |
| Warranty | 5 Years* | |

* See Bussmann series SPD Limited Warranty Statement (3A1502) for details at Eaton.com/bussmannseries.
† DEKRA 12ATEX0254 X: II 3 G Ex nA IIC T4 Gc.
††ATEX, UL, CSA.

# The power of space

The revolutionary **Bussmann™ series Low-Peak™ CUBEFuse™** delivers the smallest footprint compared to any Class J, RK or T fuse solution — requiring up to 70% less space when combined with its unique fuse holder or UL® 98 Listed Compact Circuit Protector.

Freeing up space is powerful. And the CUBEFuse does just that, while packing a 300 kA interrupting rating and enabling higher panel SCCR. Plus, it features plug-in capability for easier installation.

What will you do with all that space?

**CUBEFuse.com**
The evolution continues. 2018.

EATON
*Powering Business Worldwide*

# Circuit protection for telecom applications

Complete portfolio of Bussmann series fuses, disconnects and holders specifically designed for telecom applications

## Contents


| Description | Poles | Volts DC | Amps | Section page |
|---|---|---|---|---|
| **Fused pullout disconnects and related fuses** | | | | |
| Compact TPCDS with TCP fuses | 1 | 80 | 3-125 | 2 |
| Miniature TPMDS with TPM fuses | 1 | 80 | 3-30 | 3 |
| TP1590-4 for TPA fuses | 4 | 145/80 | 40/50 | 4 |
| TP15914 for TPA fuses | 4 | 145 | 50 | |
| TPA (170 Vdc) and TPA-B (65 Vdc) fuses | — | 170/65 | 3-40 | 5 |
| 15800 for TPS fuses and GMT-A open fuse indicator | 1 | 60 | 3-70 | |
| TPS fuses and TP158HC for TPL-B power fuses and GMT-A open fuse indicator | 1 | 80 | 70-250 | 6 |
| 15100 for TPL fuses | 1 | 60 | 70-800 | 7 |
| TPHCS for TPL fuses | 1 | 80 | 70-800 | |
| TPL fuses | — | 170 | 70-800 | 8 |
| **Fuses and fuse holders** | | | | |
| TPN current-limiting DC fuses | — | 170 | 1-600 | 9 |
| 70 Type indicating fuses | — | 125 AC 300 DC | 1/10-10 | 10 |
| 15087 holders for 70 Type fuses | 1 | 300 | 12 | |
| HLS, HLT and PCT holders for GMT fuses | Up to 25 | 125 AC 60 DC | 15 | 11 |
| GMT fast-acting fuses | — | 125 AC 60 DC | 18/100 to 3 | |
| GMT-A fast-acting open fuse indicator for use with 15800 and TP158HC disconnects | | | | |

## TPC fuses and TPCDS pullout disconnects

Telpower TPC compact current-limiting fuses mount in the TPCDS compact fused pullout disconnect that's available in two disconnect profiles and a variety of terminal styles. Recommended 0.75" center-to-center product spacing.

### Ratings

- Volts 80 Vdc
- Amps 3-125 A
- IR 100 kA

### Agency information

- UL Recognized (investigated to UL 1801) as a disconnect switch for the interruption of load current by means of withdrawing the fuse pullout
- Recognized to US and Canadian requirements under the component recognition program of Underwriters Laboratories Inc. Files E219046 and E56412
- CE

### Typical applications

- Telecommunications DC power circuit protection
- Replacement of DC telecom circuit breakers
- Applications where venting of arc or molten metals and gases during opening would pose a problem to surrounding devices

### Features

- Highest interrupting rating (100 kA) available and complete system coordination for DC circuit protection for compact footprint providing a superior protection solution for replacement of existing DC telecom circuit breakers
- AmpColor ID™ system makes fuse replacement easy
- Local and remote open fuse indication. Local alarm indication provided by LED on TPC fuse
- Remote alarm terminal available in three positions common to DC circuit protection devices

### TPC fuses

| Catalog no. (amps) | | | |
|---|---|---|---|
| TPC-3 | TPC-8 | TPC-25 | TPC-75 |
| TPC-4 | TPC-10 | TPC-30 | TPC-90 |
| TPC-5 | TPC-12 | TPC-40 | TPC-100 |
| TPC-6 | TPC-15 | TPC-50 | TPC-125 |
| TPC-7 | TPC-20 | TPC-60 | |

### TPCDS catalog number system

| Catalog no. prefix | | | |
|---|---|---|---|
| TPCDS- | | TPCDS-D- | |
| Terminal style | | Terminal style | |
| BB - | Bullet contact on the line, bullet contact on the load | CC - | Screw Clamp terminal on the line, screw Clamp terminal on the load |
| BS - | Bullet contact on the line, stud terminal on the load | BC - | Bullet contact on the line, screw Clamp terminal on the load |
| SS - | Stud terminal on the line, stud terminal on the load | SEC - | Stud terminal on the line, English threads for stud (10-32), screw Clamp terminal on the load |
| — | | SMC - | Stud terminal on the line, metric threads for stud (M5), screw Clamp terminal on the load |
| Thread | | N/A | |
| M - | Metric threads for panel mount fasteners (M3) and stud (M5) | — | |
| E - | English threads for panel mount fasteners (6-32) and stud (10-32) | | |
| Remote alarm terminal distance | | Remote alarm terminal distance | |
| 1 - | 0.645 inch from line terminal | 1 - | Side ouput (available on CC and BC terminal styles) |
| 2 - | 0.970 inch from line terminal | 2 - | Bottom output, .970 inch from line terminal (available on BC terminal style only) |
| 3 - | 1.285 inch from line terminal | — | |

| Catalog no. | | | |
|---|---|---|---|
| TPCDS-BBE-1 | TPCDS-BSE-2 | TPCDS-SSE-3 | TPCDS-D-SEC1* |
| TPCDS-BBE-2 | TPCDS-BSE-3 | TPCDS-SSM-1 | TPCDS-D-SEC2* |
| TPCDS-BBE-3 | TPCDS-BSM-1 | TPCDS-SSM-2 | TPCDS-D-SMC1* |
| TPCDS-BBM-1 | TPCDS-BSM-2 | TPCDS-SSM-3 | TPCDS-D-SMC2* |
| TPCDS-BBM-2 | TPCDS-BSM-3 | TPCDS-D-BC1* | |
| TPCDS-BBM-3 | TPCDS-SSE-1 | TPCDS-D-BC2* | |
| TPCDS-BSE-1 | TPCDS-SSE-2 | TPCDS-D-CC1* | |

* Not investigated to Canadian requirements.

### Dimensions

- See data sheet no. 5023

**Data sheet no. 5023**

## TPM fuse and TPMDS pullout disconnect

Telpower TPM miniature current-limiting fusses mount in the miniature TPMDS pullout disconnect. The TPM fuses feature local open fuse indication and TPMDS is easily integrated into remote indication systems.

### Ratings

- Volts 80 Vdc
- Amps 3-30 A
- IR 20 kA

### Agency information

- UL Recognized (investigated to UL 1801) as a disconnect switch for the interruption of load current by means of withdrawing the fuse pullout
- Recognized to US and Canadian requirements under the component recognition program of Underwriters Laboratories Inc. Files E219046 and E56412
- CE

### Typical applications

- Telecommunications DC power circuit protection
- Applications with restricted space, or mounting in 1 U (1.75"/44.5mm) panels

### Features

- Smallest and most versatile fused disconnect switch available allowing for assembly into 1 U (1.75"/44.5mm) panel. Easy to connect:
  - Load: 1/4" quick-connect or bolted connection with 10-32 (M5) captive nut
  - Line: 1/4" quick-connect or screw connection with clearance hole for #10 (M5) bolt
- AmpColor ID™ System makes fuse replacement easy
- Switch design provides for easy panel mounting by single captive 4-40 (M3) nut and panel notch integral to switch footprint
- Complete system coordination capability with local and remote open fuse indication. Local alarm indication provided by LED on TPM fuse (maximum alarm circuit current: 20 mA)

### TPM fuses

| Catalog no. (amps) | | | |
|---|---|---|---|
| TPM-3 | TPM-6 | TPM-10 | TPM-20 |
| TPM-4 | TPM-7 | TPM-12 | TPM-25 |
| TPM-5 | TPM-8 | TPM-15 | TPM-30 |

### TPMDS pullout disconnects (accept all TPM fuse amp ratings)

| Catalog no. | Description |
|---|---|
| TPMDS-E | Pullout fused disconnect, English hardware |
| TPMDS-M | Pullout fused disconnect, metric hardware |

**Dimensions — see data sheet no. 5022**

### TPMDS alarm schematic

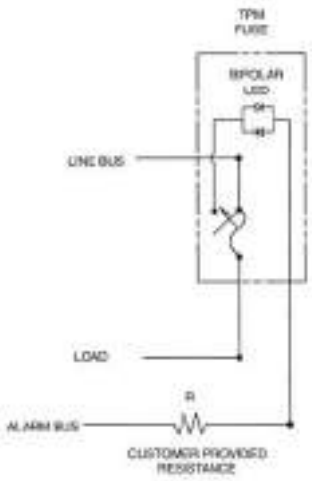


### Notes:

1. The resistance (R) must be provided by the end-user to limit the open fuse indication output current to a maximum of 20mA. The "R" value should be calculated using the system voltage value. If remote indication functionality is not required, the END-USER CIRCUITRY must still be supplied to provide a resistance path to the return for the local indication to properly function.
2 The fuse is polarized to maintain proper orientation with the switch housing. The line and load terminals are identified on the switch housing.



Data sheet no. 5022

## TP15900-4 fused pullout disconnect for TPA fuses

4-pole fused pullout disconnect for use with Telpower TPA and TPA-B fuses. Pullout disconnects feature remote open fuse indication capability.

### Ratings

- Volts
  - 145 Vdc@40 A per pole
  - 80 Vdc@50 A per pole

### Agency information

- UL Recognized File E97649 as a disconnect switch for interruption of load current by means of withdrawing the fuse carrier
- UL Recognized as a component for telecommunication power distribution equipment (UL category QPQY2)
- UL Recognized fuses for branch circuit protection
- CSA Component Acceptance for the system
- CE

### Typical applications

- Telecommunications DC power circuit protection

### Features

- Easy installation, connects directly to busbar, reduces external wiring per pole. Rear accessibility for line and load terminations
- LED alarm signaling (LED current 30 mA max)
- Local and remote open-fuse indication along with fuse orientation rejection feature and fuse presence indication
- Alarm test probe point allows on-site alarm circuit checking

| Catalog no. | Description |
|---|---|
| TP15900-4 | 4-pole common disconnect |
| TP15900-41 | 4-pole common disconnect w/ split alarm, split line |

### Available fuses

| Catalog symbol | Amps | Volts DC | IR |
|---|---|---|---|
| TPA | 3, 5, 10, 15, 20, 25, 30, 40, 50 | 170 | 100 kA |
| TPA-B | 20, 25, 30 | 65 | 20 kA |

### Accessories

- Spare fuse holders: catalog numbers 5TPH and TPSFH-AS

### Dimensions — mm (in)

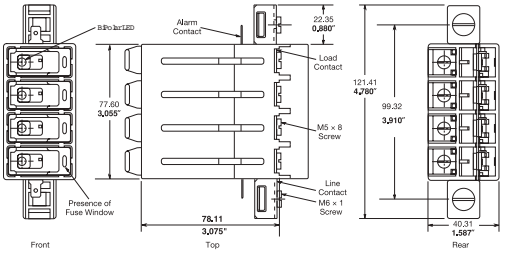


**Data sheet no. 5001**

## TP15914 fused pullout disconnect

Modular 4-pole fused pullout disconnect for us with TPA fuses. 4-poles per module can be ganged up to four modules for a total of 16 poles. The TP15914 features open fuse indication and fuse presence indication along with fuse orientation rejection.

### Ratings

- Volts 145 Vdc
- Amps 50 A max per pole

### Agency information

- UL Recognized, Guide JFHR2, File E56412
- UL Recognized as a disconnect switch for interruption of load current by means of withdrawing the fuse carrier
- UL Recognized as a component for telecommunication power distribution equipment (UL category QPQYZ)
- UL Recognized fuses for branch circuit protection
- CSA Certified, Class 1422-30, File 53787
- CSA Component Acceptance for the system

### Typical applications

- Telecommunications DC power circuit protection

### Features

- Easy installation with totally enclosed module that connects directly to busbar to reduce external per-pole wiring.
- Standard front access load and line double lug connection for 8 AWG wire
- LED alarm signaling (LED current 30 mA max)
- Remote alarm with alarm test probe point to allow on-site alarm circuit checking

| Catalog no. | Description |
|---|---|
| TP15914 | English hardware |
| TP15914-1 | Metric hardware |

### Accessories

- Spare fuse holders: catalog numbers 5TPH and TPSFH-AS

### Dimensions — mm (in)

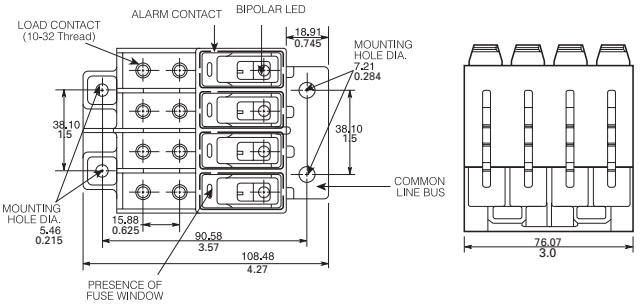


**Data sheet no. 5011**

## TPA and TPA-B indicating fuses

Indicating DC power distribution fuse for use in TP15900-4 and TP15914 fused pullout disconnects.

RoHS 2011/65/EU

### Ratings

- Volts
  - 170 Vdc (TPA)
  - 65 Vdc (TPA-B)
- Amps
  - 3-50 A (TPA)
  - 20-30 A (TPA-B)
- IR
  - 100 kA (TPA)
  - 20 kA (TPA-B)

### Agency information

- UL Recognized, Guide JFHR2, File E56412
- CSA Certified, Class 1422-30, File 53787
- CE, RoHS compliant

### Typical applications

- Telecommunications DC power circuit protection

### Features

- Indication pin provides for local and remote indication when used with Bussmann series TP15900-4 and TP15914 disconnect switches
- Patented "orange ring" fuse orientation features assures correct fuse position
- The UL Recognized ratings and current-limiting capability make this fuse ideal for cable protection on existing DC power distribution systems
- A unique blue label is used on all Telpower fuses to designate their DC capability

| Catalog no. (amps) | | | | |
|---|---|---|---|---|
| **170 Vdc** | | | | |
| TPA-3 | TPA-10 | TPA-20 | TPA-30 | TPA-50 |
| TPA-5 | TPA-15 | TPA-25 | TPA-40 | |
| **65 Vdc** | | | | |
| TPA-B-20 | TPA-B-25 | TPA-B-30 | | |

### Accessories

- Spare fuse holders: 5 position holder; 5TPH; 6 position holder; TPSFH-AS

### Dimensions — in (mm)

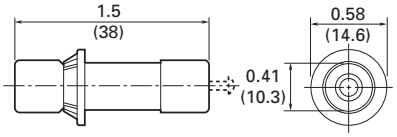


## 15800 fused pullout disconnect for the TPS fuse

Fused pullout disconnect switch for use only with the TPS main fuses (1 to 70 amp) and GMT-A indicating fuse (see page 14-11). It is recommend to also use the GMT-X cover for the GMT-A fuse.

### Ratings

- Volts 60 Vdc
- Amps 3-70 A
- SCCR 100 kA

### Agency information

- UL Recognized, Guide QPQY2, File E97649
- CE

### Typical applications

- Telecommunications DC power circuit protection

### Features

- Alarm output with wire wrap terminal or connection to 0.063" thick common alarm bus
- Spare alarm and power fuse compartment
- Mounting hardware included

| Catalog no. | Description |
|---|---|
| 15800-R-200 | Rear access panel mounting |
| 15800-F-200 | Front access panel mounting |

### Accessories

- Spare fuse holders: catalog numbers TPSFH-AS (TPS fuses) and TPSFH-T (GMT fuses)

### Dimensions — in (mm)

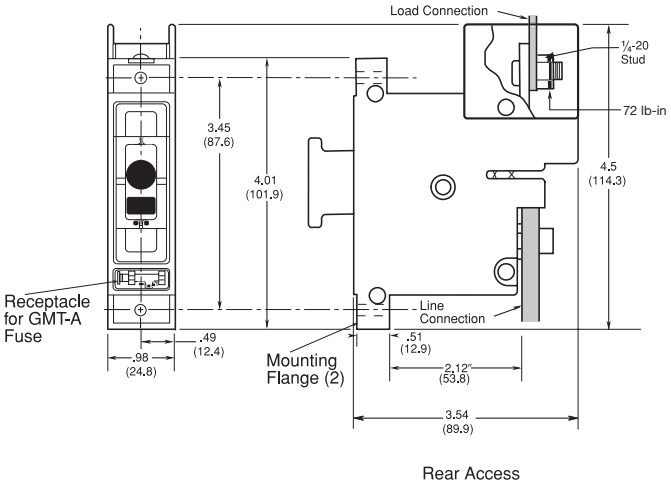


Data sheet no. 5012
Data sheet no. 5002

## TPS main power fuse

Non-indicating DC power distribution ferrule fuses specifically designed to meet the unique needs of DC power distribution systems. For use with Bussmann series 15800 fused pullout disconnect. Vertical and horizontal PCB tab versions available for circuit board applications.

### Ratings

- Volts 170 Vdc
- Amps 1-80 A
- IR 100 kA

### Agency information

- UL Recognized, Guide JFHR2, File E56412, RoHS compliant, CE

### Typical applications

- Telecommunications DC power circuit protection
- Applications requiring printed circuit board mounting

### Features

- The UL Recognized ratings and current-limiting capability make this fuse ideal for cable protection on existing DC power distribution systems
- A unique blue label is used on all Telpower fuses to designate their DC capability
- PCB tab versions eliminate the need for fuseclips when mounting the fuse on a circuit board

| Catalog no. (amps) | | | |
|---|---|---|---|
| **Ferrule** | | | |
| TPS-1 | TPS-6 | TPS-25 | TPS-50 |
| TPS-2 | TPS-10 | TPS-30 | TPS-60 |
| TPS-3 | TPS-15 | TPS-35 | TPS-70 |
| TPS-5 | TPS-20 | TPS-40 | TPS-80 |
| **Horizontal PCB tabs** | | | |
| TPS-1L | TPS-6L | TPS-25L | TPS-50L |
| TPS-2L | TPS-10L | TPS-30L | TPS-60L |
| TPS-3L | TPS-15L | TPS-35L | TPS-70L |
| TPS-5L | TPS-20L | TPS-40L | TPS-70LB* |
| **Vertical PCB tabs** | | | |
| TPS-40V | TPS-50V | TPS-80V | |

* LB = Bolt tag

### Accessories

- Spare fuse holder TPSFH-AS, see page 15-4

### Dimensions — in (mm)

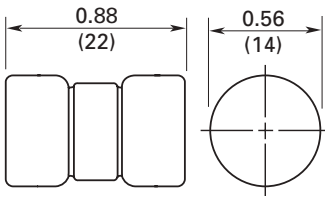


**Data sheet no. 5009**

## TP158HC fused pullout disconnect

High amp panel mount, rear access fused pullout disconnect for use only with Telpower TPL-B main fuses (70-250 A) and GMT-A indicating fuse (see page 14-11). It is recommend to also use the GMT-X cover for the GMT-A fuse.

### Ratings

- Volts 80 Vdc
- Amps 70-250 A
- SCCR 100 kA

### Agency information

- UL Recognized (investigated to UL 1801) as a disconnect switch for the interruption of load current by means of withdrawing the fuse pullout, Guide QPQY2, File E97649

### Typical applications

- Telecommunications DC power circuit protection

### Features

- Similar profile, mounting method, and backplane configuration as 15800. The TP158HC can be installed into existing 15800 panels using the space of two 15800 pullout disconnects
- Innovative new fuse pullout design eliminates need for tools to replace the Telpower type TPL-B fuse
- Alarm output with wire wrap terminal or connection to 0.063 inch (1.6mm) thick common alarm bus
- Hardware included: Load: washer, split lockwasher, and 5/16 - 18 nut (metric M8 x 1.25)

| Catalog no. | Hardware type |
|---|---|
| TP158HC | English |
| TP158HC-M | Metric |

### Accessories

- Spare fuse holders: TPSFH-LB (TPL-B fuses) and TPSFH-T (GMT fuses)

### Dimensions

- See data sheet no. 5021

### Application notes

The line connection uses a 1/4-20 bolt (metric M6 x 1) that threads into the line terminal. The line terminal is designed with a float of ±0.02" (±0.50mm) to allow for variation in the distance between the TP158HC mounting flange and the line busbar (see dimensions). Equipment should be designed to eliminate any relative movement between the TP158HC mounting flange and the line busbar.

The alarm circuit is not intended for pre-charging capacitive circuits. Maximum alarm circuit current 1 A.

**Data sheet no. 5021**

## 15100 fused pullout disconnect

Fused pullout disconnect system for use with TPL Telpower fuses.

### Ratings

- Volts 60 Vdc
- Amps 70-800 A
- SCCR 100 kA

### Agency information

- UL Recognized, Guide QPQY2, File E97649
- CE

### Typical applications

- Telecommunications DC power circuit protection

### Features

- Single-pole fusible disconnect switch for primary DC power distribution
- Robust housing and terminal construction for demanding applications
- Panel mounting
- Easily connected to line or load bus

| Catalog no. | TPL fuse amp range |
|---|---|
| 15100-401 | 70-400 |
| 15100-601 | 300-800 |

### Dimensions — in (mm)

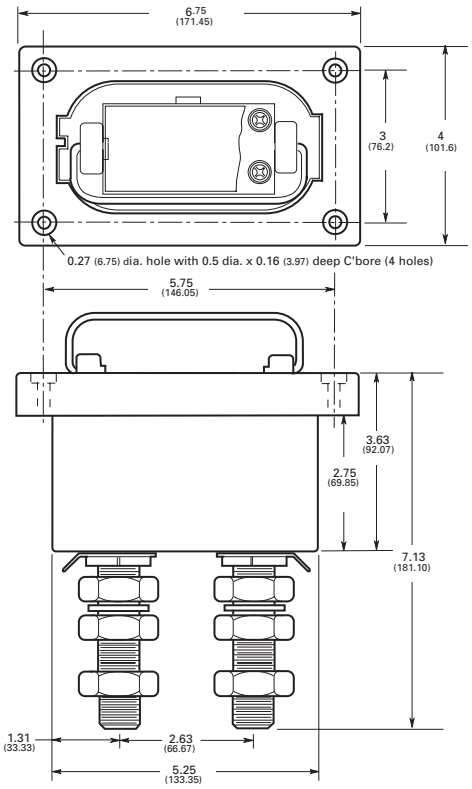


## TPHCS high current fused pullout disconnect

High current fused pullout disconnect for use with TPL-B, TPL-C and TPH Telpower fuses. Available as a complete pullout disconnect or just the pullout. Base may be purchased separately.

### Ratings

- Volts 80 Vdc
- Amps 70-800 A
- SCCR 100 kA

### Agency information

- UL Recognized (investigated to UL 1801) as a disconnect switch for the interruption of load current by means of withdrawing the fuse carrier
- UL Recognized to meet the requirements for Canadian Standards

TPHCS800-MAV shown

### Typical applications

- Telecommunications DC power circuit protection

### Features

- Innovative design eliminates needing tools to replace the TPL-B, TPL-C or TPH fuses
- Easy to install with captive fasteners for direct busbar mounting (bolts not included). Standard 1/4" quick-connect for easy remote alarm connection
- Optional electronic alarm eliminates needing parallel indicating fuses while providing local and remote open-fuse indication (maximum remote alarm current: 20 mA); Bipolar alarm: designed for both central office and Radio applications, Local LED open fuse indication for easy viewing.
- Carrier window allows easy viewing of installed fuse amp rating
- Compact design is ideal for today's high power, high-density cabinets

| Catalog no. (pullout and base) | Hardware (option) | For fuse symbol | Fuse amp range |
|---|---|---|---|
| TPHCS250-M | Metric | TPL-B | 70-250 |
| TPHCS250-E | English | TPL-B | 70-250 |
| TPHCS250-ML | Metric, LED | TPL-B | 70-250 |
| TPHCS250-EL | English, LED | TPL-B | 70-250 |
| TPHCS250-MAV | Metric, alarm | TPL-B | 70-250 |
| TPHCS250-EAV | English, alarm | TPL-B | 70-250 |
| TPHCS800-M | Metric | TPL-C or TPH | 300-800 |
| TPHCS800-E | English | TPL-C or TPH | 300-800 |
| TPHCS800-ML | Metric, LED | TPL-C or TPH | 300-800 |
| TPHCS800-EL | English, LED | TPL-C or TPH | 300-800 |
| TPHCS800-MAV | Metric, alarm | TPL-C or TPH | 300-800 |
| TPHCS800-EAV | English, alarm | TPL-C or TPH | 300-800 |



Data sheet no. 5003
Data sheet no. 5020

| Catalog no. (components) | Description rating/ hardware/option | For fuse symbol | Amp range |
|---|---|---|---|
| TPHCS250-P | Pullout only (250 A) | TPL-B | 70-250 |
| TPHCS800-P | Pullout only (800 A) | TPL-C or TPH | 300-800 |
| TPHCS-B-M | Base only, metric | — | 800 max |
| TPHCS-B-E | Base only, English | — | 800 max |
| TPHCS-B-ML | Base only, metric, LED | — | 800 max |
| TPHCS-B-EL | Base only, English, LED | — | 800 max |
| TPHCS-B-MAV | Base only, metric, alarm | — | 800 max |
| TPHCS-B-EAV | Base only, English, alarm | — | 800 max |

### Notes

1. TPHCS250 and TPHCS800 pullouts and bases are the same with exception to the fuse type the pullout will hold (TPL-B, TPL-C or TPH).
2. Plastic rated UL 94V0, 140°C RTI.

### Dimensions — mm (in)

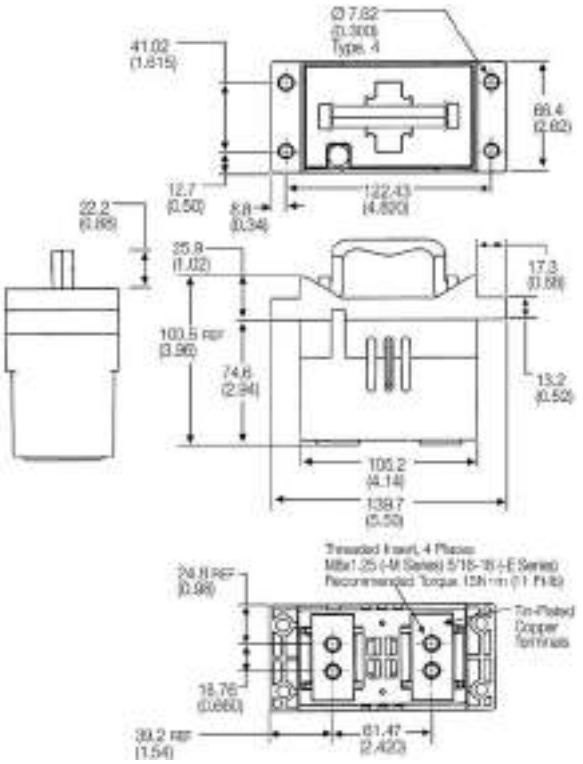

## TPL high amp DC fuses

High amp DC power distribution fuses for use with Telpower 15100, 15200, TP158HC and TPHCS fused pullout disconnects. TPL-TA adapter kit is necessary when replacing a UBO fuse.

### Ratings

- Volts 170 Vdc
- Amps 70-800 A
- IR 100 kA

### Agency information

- UL Recognized Guide JFHR2, File E56412 Bellcore
- CE

### Typical applications

- Telecommunications power circuit protection

### Features

- Current-limiting design for DC power distribution systems
- UL Recognized branch circuit protection
- Complete system coordination capability
- Energy savings with low watts loss, low operating temperatures, and minimum $I^2t$ levels

| Catalog no. | Amps | Catalog no. | Amps |
|---|---|---|---|
| TPL-BA | 70 | TPL-BL | 250 |
| TPL-BB | 80 | TPL-CN | 300 |
| TPL-BC | 90 | TPL-CO | 350 |
| TPL-BD | 100 | TPL-CR | 400 |
| TPL-BE | 125 | TPL-CU | 450 |
| TPL-BF | 150 | TPL-CV | 500 |
| TPL-BG | 175 | TPL-CZ | 600 |
| TPL-BH | 200 | TPL-CZH | 800 |
| TPL-BK | 225 | | |

### Accessories

- Spare fuse holders: TPSFH-LB (for TPL-B fuses) TPSFH-LC (for TPL-C fuses)

### Dimensions — in (mm)

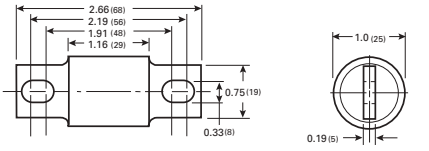


TPL-BA, TPL-BD, TPL-BF, TPL-BH, TPL-BK and TPL-BL

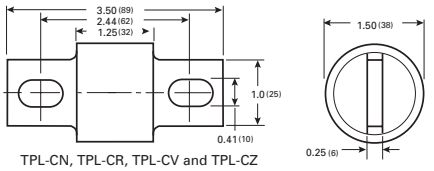


TPL-CN, TPL-CR, TPL-CV and TPL-CZ

**Data sheet no. 5020**

**Data sheet no. 5005**

## TPN high amp current limiting DC fuses

The TPN fuse is a current-limiting DC power distribution fuse that's dimensionally similar to UL Class R branch circuit fuses making them easy to install using standard RM60_ modular Class R fuse blocks.

### Ratings

- Volts 170 Vdc
- Amps 1-600 A
- IR 100 kA

### Agency information

- UL Recognized, Guide JFHR2, File E56412

### Typical applications

- Telecommunications power circuit protection

### Features

- Current-limiting design for DC power distribution systems
- Recognized branch circuit protection
- Complete system coordination capability
- Energy savings with low watts loss, low operating temperatures, and minimum $I^2t$ levels

| Catalog no. (amps) | | | |
|---|---|---|---|
| TPN-1 | TPN-30 | TPN-90 | TPN-250 |
| TPN-3 | TPN-35 | TPN-100 | TPN-300 |
| TPN-5 | TPN-40 | TPN-110 | TPN-350 |
| TPN-6 | TPN-45 | TPN-125 | TPN-400 |
| TPN-10 | TPN-50 | TPN-150 | TPN-450 |
| TPN-15 | TPN-60 | TPN-175 | TPN-500 |
| TPN-20 | TPN-70 | TPN-200 | TPN-600 |
| TPN-25 | TPN-80 | TPN-225 | |

### Accessories

- Spare fuse holders:TPSFH-N30 (for TPN 1-30) TPSFH-N60 (for TPN 35-60)

### Recommended modular* Class R fuse blocks

| Catalog no. | Amps |
|---|---|
| RM25030-1CR | 30 |
| RM25060-1CR | 60 |
| RM25100-1CR | 100 |
| RM25200-1CR | 200 |
| RM25400-1CR | 400 |
| RM25600-1CR | 600 |

* Blocks can be snapped together to create the number of required poles. Optional indicating and non-indicating finger-safe covers available for all blocks.

### Dimensions — in (mm)

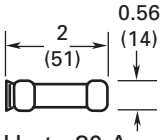


Up to 30 A

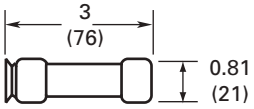


35 A to 60 A

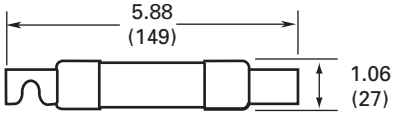


70A to 100A

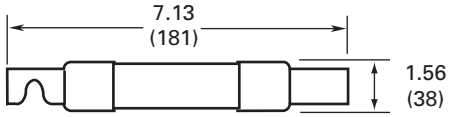


110A to 200A

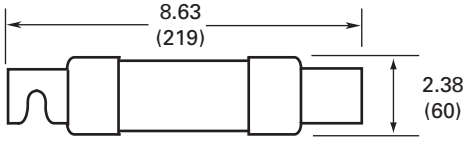


225A to 400A

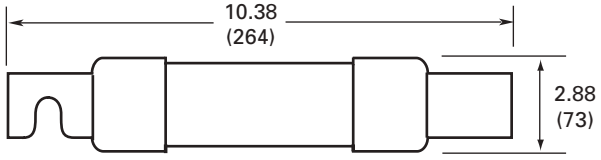


450A to 600A

## 70 Type pin indicating fuses

Pin indicating fuse for use in the 15087 panel-mount fuse holder.

### Ratings

- Volts
  - 125 Vac
  - 300 Vdc
- Amps 1/10-10 A
- IR 1 kA @ 300 Vdc

### Agency information

- UL Recognized, Guide JDYX2, File E19180 Bellcore
- CE

| Catalog no. (amps) | Color code | Lucent comcode ref. no. | Code/list no. |
|---|---|---|---|
| 70P-1/10A* | Gray/White | 100203413 | KS23751-L10 |
| 70R-15/100A* | Red/White | 101384550 | KS23751-L11 |
| 70E-18/100A* | Yellow | 100203363 | KS23751-L5 |
| 70X-2/10A | Black | — | — |
| 70F-1/4A* | Violet | 100203371 | KS23751-L6 |
| 70K-1/4A* | Violet/White | 100203405 | KS23751-L9 |
| 70G-1/2A* | Red | 100203389 | KS23751-L7 |
| 70H-3/4A* | Brown | 100203397 | KS23751-L8 |
| 70I-1A | Pink | — | — |
| 70A-1-1/3A*† | White | 100203322 | KS23751-L1 |
| 70B-2A* | Orange | 100203330 | KS23751-L2 |
| 70C-3A* | Blue | 100203348 | KS23751-L3 |
| 70J-3-1/2A | Black/White | — | — |
| 70D-5A* | Grn/Black | 100203355 | KS23751-L4 |
| 70L-6A | Grn/White | — | — |
| 70M-8A | Brown/White | — | — |
| 70N-10A | Violet/Yellow | — | — |
| 72A Plastic Case (dummy) | | 100203421 | — |
| 72B Blister Pack (dummy) | | 103757977 | — |

* Product designed to comply with Bellcore Technical Reference TR-TSY-000799 Issue 1, December 1988.
† Not UL Recognized.

## 15087 fuse holder

Panel mount fuse holder for use with 70 Type fuses.

### Ratings

- Volts 300 Vdc
- Amps 12 A

### Agency information

- UL Recognized, Guide IZLT2, File E14853
- CE

### Flammability rating

- UL 94V0

### Catalog number 15087

### Typical applications

- Telecommunications DC power circuit protection

### Features

- Panel mount fuse holder for 70 type fuses supplied with two screws
- Remote alarm capability

### Optional color-code eyelets

Color-coded eyelets are used with the fuse holder to indicate its fuse amp rating.

| Catalog no. | Amps | Color coding |
|---|---|---|
| 1A1706-17 | 15/100 | Red/White |
| 1A1706-01 | 18/100 | Yellow |
| 1A1706-15 | 1/10 | Gray/White |
| 1A1706-02 | 2/10 | Black |
| 1A1706-03 | 1/4 | Violet |
| 1A1706-04 | 1/4 | Violet/White |
| 1A1706-05 | 1/2 | Red |
| 1A1706-06 | 3/4 | Brown |
| 1A1706-07 | 1 | Pink |
| 1A1706-08 | 1-1/3 | White |
| 1A1706-09 | 2 | Orange |
| 1A1706-10 | 3 | Blue |
| 1A1706-16 | 3-1/2 | Black/White |
| 1A1706-11 | 5 | Green/Black |
| 1A1706-12 | 6 | Green/White |
| 1A1706-13 | 8 | Brown/White |
| 1A1706-14 | 10 | Violet/Yellow |


Data sheet no. 5007

## HLS, HLT, PCT holders for GMT indicating fuses

Configurable fuse holders for use with GMT indicating fuses:

- PCT single-pole
- HLS 1-25 pole without flanges
- HLT 1-25 pole with flanges

### Ratings

- Volts 60 Vdc/125 Vac
- Amps 15 A per pole
- Poles Up to 25 (HLT, HLS)

### Agency information

- UL Recognized, Guide IZLT2, File E14853, 15 A (60 Vdc)
- CE

### Flammability rating

- UL 94V0

### Typical applications

- Telecommunications DC power circuit protection

### Features

- Multiple configurations provide application flexibility
- Compact size saves space

| Catalog symbol | Number of poles |
|---|---|
| PCT | 1 |
| HLS | 1-25 |
| HLT | 1-25 |

To order, see data sheet no. 5010 for build-a-code to determine:

- Body style (HLT or HLS)
- Number of poles
- Busbar type
- Busbar position
- Termination location

**Data sheet no. 5010**

## GMT indicating fuses for HLS, HLT, PCT holders

Fast-acting indicating fuses for HLT, HLS and PCT fuse holders.

### Ratings

- Volts
  - 60 Vdc
  - 125 Vac
- Amps 18/100 to 15 A
- IR
  - 450 A@60 Vdc
  - 300 A@125 Vac

RoHS 2011/65/EU

GMT - Dummy

### Agency information

- UL Recognized, Guide JFHR2, File E56412
- RoHS compliant, CE

### Typical applications

- Telecommunications DC power circuit protection

### Features

- Local and remote indication capability
- Color coded for easy amp rating identification

| Catalog no. (amps)* | Color code | Catalog no. (amps) | Color code |
|---|---|---|---|
| GMT-18/100A | Yellow | GMT-3-1/2A | White/Blue |
| GMT-1/4A | Violet | GMT-4A | White/Brown |
| GMT-3/8A | Green/Gray | GMT-5A | Green |
| GMT-1/2A | Red | GMT-7-1/2A | Black/White |
| GMT-65/100A | Black | GMT-10A | Red/White |
| GMT-3/4A | Brown | GMT-12A | Yellow/Green |
| GMT-1A | Gray | GMT-15A | Red/Blue |
| GMT-1-1/3A | White | GMT-Dummy | Gray body |
| GMT-1-1/2A | White/Yellow | GMT-X | Clear cover |
| GMT-2A | Orange | GMT-Y | Clear cover w/tab |
| GMT-3A | Blue | | |

* Some GMT ratings may be sold only in bulk pack.

### Accessories

- Spare fuse holder, catalog number TPSFH-T

## GMT-A fast-acting, open fuse indicator

Fast-acting GMT-A open fuse indicator is designed specifically for use in the Telpower 15800 and TP158HC fused pullout disconnects as a means of providing main fuse open indication.

### Agency information

RoHS 2011/65/EU

- UL Recognized, Guide JFHR2, File E56412
- RoHS compliant
- CE

**Catalog no./color code: GMT-A/Yellow**

**Data sheet no. 5008**

BUSSMANN
SERIES

# Selective coordination has never been easier.

With the Bussmann™ series **Quik-Spec™ Coordination Panelboard** (QSCP), it's simple and cost-effective to selectively coordinate using published circuit breaker/fuse and fuse/fuse ratio tables.

What's more, the compact panelboard features a footprint equal to circuit breaker panels but 40% smaller than traditional fusible panels. Its safety-focused design includes finger-safe branches, branch fuse interlock and fuse ampacity rejection.

And with up to 200 kA short-circuit current rating (SCCR), the QSCP easily withstands high fault currents.

Learn more at Eaton.com/bussmannseries.

EATON
Powering Business Worldwide

Follow us on social media to get the latest product and support information.

# Bussmann series accessories to fit your needs

## Contents


| Description | Section page |
|---|---|
| SAMI™ fuse covers — Class CC, G, H(K), J, R, T and UL supplemental (midget) | 2 |
| Fuse reducers — Class J, H(K) and R | |
| Dummy fuse "neutrals" — 1/4" x 1-1/4", UL supplemental (midget), Class CC, H(K) and R | 3 |
| Fuse pullers | |
| Fuse testers | |
| Spare fuse holders | 4 |
| Spare fuse cabinet | |
| Tron™ clip clamps | |
| DIN-Rail adapter | |

## SAMI™ fuse covers

SAMI (Safety And Maintenance Improvement) fuse covers help improve electrical safety by shielding a fuse that's mounted in an open style block. They are available in indicating and non-indicating versions for fuse Classes CC, G, H(K), J, RK1, RK5 and T, as well as UL supplemental (midget-type) fuses. Indicating feature requires a minimum of 90 V to illuminate lamp.

One cover required for each pole. WARNING: To avoid electrical shock, turn power off before installing, removing or servicing.

### Agency information

- UL Listed; SAMI-1I through SAMI-6I and SAMI-9I, SAMI-1N through SAMI-6N and SAMI-9N
- UL Recognized; Guide JDVS2, File E58836, SAMI-7I and SAMI-7N
- CSA Certified, Class 6225-01, File LR47235
- CE

### Features

- Insulated cover isolate fuses mounted in open blocks
- Optional open fuse indicating light aids in system troubleshooting
- Units are re-usable
- Allows visual marking of lineside and loadside of fuses

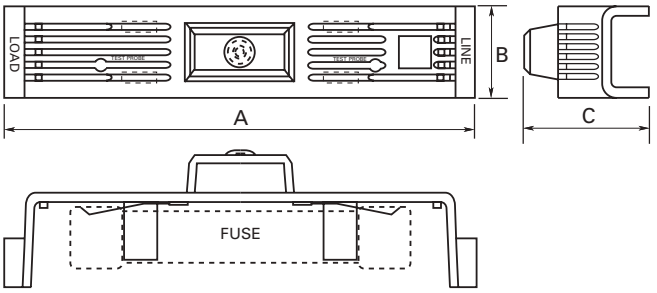


| Catalog no.* | Volts/fuse class/amp range | Dimensions — in A | B | C |
|---|---|---|---|---|
| SAMI-1N** | 600 V, J (0-30 A), 600 V, T (35-60 A)<br>250 V, RK, K5, H (35-60 A) | 5.02 | 1.03 | 1.94 |
| SAMI-2_ | 600 V, RK, K5, H (0-30 A) | 7.03 | 1.30 | 2.07 |
| SAMI-3_ | 600 V, J (65-100 A) | 7.03 | 1.30 | 2.33 |
| SAMI-5_ | 600 V, RK, K5, H (35-60 A) | 8.20 | 1.30 | 2.18 |
| SAMI-6_ | 600 V, J (35-60 A) | 4.98 | 1.17 | 2.14 |
| SAMI-7_ | 600 V, Midget, Class CC, G (0-30 A) | 3.82 | 0.75 | 1.72 |
| SAMI-9_ | 250 V, RK, K5, H (0-30 A)<br>600 V T (0-30 A) | 3.82 | 0.75 | 1.72 |

* For indicating cover, add suffix "I", for non-indicating cover, add suffix "N," example: SAMI-7I = Indicating, SAMI-7N = Non-indicating.
**Available only as non-indicating.

Trimming guides, no. 12041, 12042, 12043, 12045, 12046, 12049

## Fuse reducers and dummy "neutrals"

### Reducers for Class J fuses (DFJ, JKS, LPJ)

**Carton quantity: 10 pair**

| Catalog no. | Fuse amp range | Equipment/block amps |
|---|---|---|
| J-63 | 1-30 | 60 |
| J-13 | 1-30 | 100 |
| J-16 | 35-60 | 100 |
| J-26 | 35-60 | 200† |
| J-21 | 70-100 | 200† |
| J-41 | 70-100 | 400† |
| J-42†† | 110-200 | 400† |
| J-62 | 110-200 | 600† |
| J-64 | 225-400 | 600† |

† Not for bolt-on applications.
††Not compatible with JKS fuses.

### Reducers for Class H(K) and R fuses

### Agency information

- UL Listed, Guide IZZR, File E12853
- CSA Certified, Class 6225-01, File 47235

**Carton quantity: 10 pair**

| Catalog no. 250 V | 600 V | Fuse amp range | Equip./block amps |
|---|---|---|---|
| **Class R reducers (FRN-R, FRS-R, KTN-R, KTS-R, LPN-RK, LPS-RK)** | | | |
| NO.263-R | NO.663-R | Up to 30 | 60 |
| NO.213-R | NO.216-R | Up to 30 | 100 |
| NO.216-R | NO.616-R | 35-60 | 100 |
| NO.226-R | NO.626-R | 35-60 | 200 |
| NO.2621-R† | NO.2621-R† | 70-100 | 200 |
| NO.2641-R† | NO.2641-R† | 70-100 | 400 |
| NO.242-R† | NO.642-R† | 110-200 | 400 |
| NO.2661-R† | NO.2661-R† | 70-100 | 600 |
| NO.2662-R† | NO.2662-R† | 110-200 | 600 |
| NO.2664-R*† | NO.2664-R*† | 225-400 | 600 |
| **Class H(K) reducers (NON, NOS, REN, RES)** | | | |
| NO.263 | NO.663 | Up to 30 | 60 |
| NO.213 | NO.216 | Up to 30 | 100 |
| NO.216 | NO.616 | 35-60 | 100 |
| NO.226 | NO.626 | 35-60 | 200 |
| NO.2621 | NO.2621 | 70-100 | 200 |
| NO.2641† | NO.2641† | 70-100 | 400 |
| NO.2642 | NO.2642 | 110-200 | 400 |
| NO.2661† | NO.2661† | 70-100 | 600 |
| NO.2662† | NO.2662† | 110-200 | 600 |
| NO.2664† | NO.2664† | 225-400 | 600 |

* Single reducer only, pair not required.
† Not CSA Certified.

**Data sheet no. 1204**

**Data Sheet: 1118**

## Dummy fuse "neutrals"

**Note: These are not fuses**

| Catalog no. | Volts | Fuse equivalent | |
|---|---|---|---|
| | | Dimension | Amp range |
| NNB | — | 13/32" x 1-1/2" | — |
| NNB-R | — | Class CC | — |
| NNC | — | 1/4" x 1-1/4" | — |
| NTN-R-30 | 250 | Class R/H | Up to 30 |
| NTN-R-60 | 250 | Class R/H | 35-60 |
| NTN-R-100 | 250 | Class R/H | 70-100 |
| NTN-R-200 | 250 | Class R/H | 110-200 |
| NTN-R-400 | 250 | Class R/H | 225-400 |
| NTN-R-600 | 250 | Class R/H | 450-600 |
| NTS-R-30 | 600 | Class R/H | Up to 30 |
| NTS-R-60 | 600 | Class R/H | 35-60 |
| NTS-R-100 | 600 | Class R/H | 70-100 |
| NTS-R-200 | 600 | Class R/H | 110-200 |
| NTS-R-400 | 600 | Class R/H | 225-400 |
| NTS-R-600 | 600 | Class R/H | 450-600 |

## Fuse pullers

Fuse pullers are available in various sizes to help safely and easily extract fuses from blocks and holders. They are only to be used when the associated circuit has been de-energized.

| Catalog no. | Application |
|---|---|
| FP-2 | 13/32" to 13/16" diameter fuses |
| FP-3 | 1" to 1-3/4" diameter. fuses |
| FP-4 | 1-3/4" to 2-1/2" diameter. fuses |
| FP-6 | Up to 60 A Class T fuses |
| FP-A3 | Glass tube and ATC fuses |
| CFP-30 | CUBEFuse up to 30 A |
| CFP-60 | CUBEFuse 35-60 A |
| CFP-100 | CUBEFuse 70-100 A |

## Fuse testers

Fuse testers for automotive blade, and, glass tube and ferrule fuses up to 1-7/8" length. Probes slide to appropriate fuse length. Batteries are included and replaceable.

**WARNING:** DO NOT test fuses while they are in the fuse panel.

| Catalog no. | Description |
|---|---|
| FT-2* | Glass tube and ferrule fuse tester |
| FT-3 | Blade fuse tester |

* Replacement battery is Rayovac 364 or equivalent.

## Spare fuse holders

**TPSFH** spare fuse holders are durably constructed using thermoplastic and feature common mounting using #6 screws or bolts on 5-inch centers. With built-in retaining clips to secure fuses, these dovetailed/interlocking holders simplify installation and reduce hardware needs. Common footprint allows for any combination of holders to be mounted together.

**5TPH** spare fuse holder for Class CC and 13/32" diameter fuses is constructed of thermoplastic with adhesive tape on back for easy mounting on cabinet doors without the need for extra hardware.

**Flammability rating: UL 94V0**

| Catalog no. | Fuse capacity | For use with: |
|---|---|---|
| TPSFH-CW | 4 | TPC and/or TPW fuses |
| TPSFH-M | 4 | TPM fuses |
| TPSFH-LC | 1 | TPL-C series fuses |
| TPSFH-LB | 1 | TPL-B series fuses |
| TPSFH-N60 | 1 | TPN (35-60 A) fuses |
| TPSFH-N30 | 4 | TPN (1-30 A) fuses |
| TPSFH-AS | 6 | TPA and TPS fuses |
| TPSFH-T | 10 | GMT fuses |
| 5TPH | 5 | Class CC and 13/32" diameter fuses |

**Data sheet no. 5014**

## Spare fuse cabinet

SFC locking spare fuse cabinet measures 24" W x 30" H x 12" D and has five cubic feet of storage space. It's constructed of heavy 16 gauge steel with durable baked ASA 61 grey enamel finish. Cabinet door is equipped with locking handle for security. Mounting holes are 16 inches on center with key slots.

| Catalog no. | Description |
|---|---|
| SFC-FUSE-CAB | Cabinet and one shelf |
| SFC-SHELF* | Extra shelf for cabinet |
| 2A1910-1 | Replacement key |
| 2A1910-3 | Replacement lock |

**Data sheet no. 1119**

## TRON™ clip clamps

Clip clamps are constructed with a phenolic knob and plated-steel jaws. They provide a means of tightening the contact between fuse block clips and the fuse and are available in various sizes for both ferrule and blade-type cartridge fuse clips.

| Catalog no. | Volts | For fuse amps |
|---|---|---|
| NO.1 | 250 | Up to 30 |
| NO.2 | 250 | 35-60 |
| | 600 | Up to 30 |
| NO.4 | 600 | 35-60 |
| NO.5 | 250/600 | 70-100 |
| NO.6 | 250/600 | 110-200 |
| NO.7 | 250/600 | 225-400 |
| NO.8 | 250/600 | 450-600 |

## DIN rail adapter

A DIN-Rail adapter permits secure, positive snap-on mounting of up to 30 amps fuse blocks (1-, 2-, or 3-pole) onto various size rails to eliminates costly and time consuming drilling, tapping, and fastener mounting. The adapter mechanically locks into mounting holes of fuse blocks to form an integral part. One adapter is required for 1- and 2-pole blocks. Two adapters are required for 3-pole blocks.

With the exception of the 32mm DIN-Rail, all block/adapter assemblies can be removed from a rail simply by pulling up on the release tab.

Use of rail end-stops on both sides of adapters is recommended.

| Catalog no. | Block fuse class/size* | Fits rail sizes | Color |
|---|---|---|---|
| DRA-1 | CC | 15mm (Sym.)<br>32mm (Asym.)<br>DIN 35mm (Sym.) | Black |
| | 13/32" x 1-1/2" | | |
| | 10x38mm | | |
| | G | | |
| | H (250 V)† | | |
| | J (30 A, 60 A*) | | |
| | R (250 V)† | | |

* Not applicable for new modular fuse blocks that have built-in 35mm DIN-Rail mount capability.
† Mounting on 15mm rails is not recommended.

**Package quantities**

- Standard 10
- Bulk 100 (Cat. No. BK/DRA-1)

# We make what matters work*

*Horseless carriages. World War II aircraft. NASA space shuttles. Electric vehicles.

Over the past 100 years, Bussmann series products have protected the things that have propelled our world forward.

And they'll continue to protect for the next 100 years. Because we never lose sight of what matters. And it's our job to make sure it works.

## Contents


| Description | Section page |
|---|---|
| Fuse sizing for 600 V building electrical systems | 2-3 |
| Selective coordination | 4 |
| Low voltage, branch circuit fuse types and classes | 5 |
| Glossary of common electrical terms | 6-7 |
| Electrical formulas | 7 |
| FuseFinder fuse and fuse block cross reference | 8-9 |
| Catalog number index | 10-14 |


For information on products not contained in this catalog, contact Customer Satisfaction, toll-free, at 855-287-7626 (855-BUSSMANN) between 7:00 a.m. — 6:00 p.m. Central time, M-F, or email BussCustSat@Eaton.com.

## Fuse sizing for 600 V building electrical systems

General guidelines are given for selecting fuse amp ratings for most circuits. For specific applications warranting other fuse sizing, the load characteristics and appropriate NEC sections should be considered. The selections shown here are not, in all cases, the maximum or minimum amp ratings permitted by the NEC. Demand factors as permitted by the NEC are not included. Study the pertinent NEC sections noted by "()" and reference pertinent footnotes.

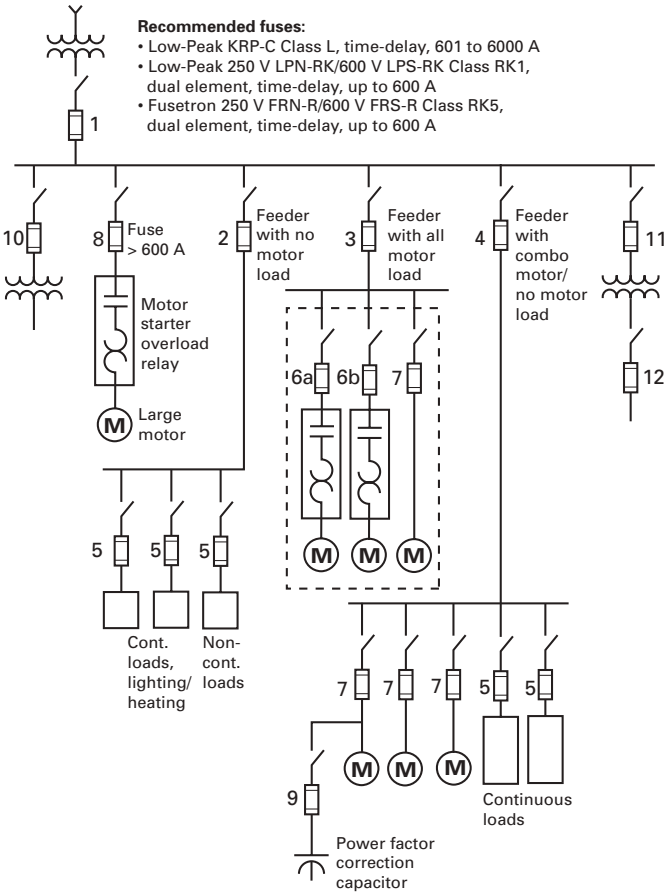


### Dual-element, time-delay fuses

#### Class CF (up to 400 A), and J, RK1 and RK5 ( up to 600 A)

For fuses above 600 A, use Class L time-delay fuses with ratings from 601-6000 A. While these fuses are not dual-element construction, the Bussmann series KRP-C-SP is a time-delay fuse.

1. **Main service.** Size fuse according to method in 4 below.
2. **Feeder circuit with no motor loads.** (215.3) The fuse size must be at least 125% of the continuous load† plus 100% of the non-continuous load. Do not size larger than the conductor's ampacity*.
3. **Feeder circuit with all motor loads.** (430.62) Size the fuse at 150% to 175% of the largest motor's full load current** plus the full-load current** of all other motor'sΔ.
4. **Feeder circuit with mixed loadsΔ.** (430.63) Size fuse at sum of:
   a. 150% to 175%†† of the largest motor's full-load current**, plus
   b. 100% of all other motors' full-load current**, plus
   c. 125% of the continuous, non-motor load†, plus
   d. 100% of the non-continuous, non-motor load
5. **Branch circuit with no motor load.** (210.20) The fuse size must be at least 125% of the continuous load† plus 100% of the non-continuous load. Do not size larger than the conductor's ampacity*.
6. **Motor branch circuit with overload relays.** Where overload relays are sized per 430.32 for motor running overload protection, there are various alternatives:

   **6a. Motor branch circuit short-circuit and ground fault protection. (430.52) (most common).** Size the fuse between 150 to 175%†† of the full load current.** Provides branch circuit short-circuit and ground fault protection only.

   **6b. Motor branch circuit short-circuit and ground fault protection (430.52) as well as backup overload protection.** Size FRN-R and FRS-R Class RK5 dual-element, time-delay fuses at 125% and LPN-RK-SP and LPS-RK-SP Class RK1 dual-element, time-delay fuses at 130% of motor full-load current or next higher size. This results in closer fuse sizing and provides some backup running overload protection. In addition, it provides motor branch circuit short-circuit and ground fault protection. Sizing in this manner may result in better motor protection if the overload relays are not properly sized or calibrated.
7. **Motor branch circuit with only fuse protection.** Where the fuse is the only motor protection, the following FRS-R and FRN-R, Class RK5, fuses provide motor running overload protection (430.32) and short-circuit protection (430.52):
   - Motor 1.15 service factor or 40°C rise. Size the fuse at 110% to 125% of the motor full-load current on the name plate [430.6(a)(2)].
   - Motor less than 1.15 service factor or over 40°C rise. Size fuse at 100% to 115% of motor full-load current on the name plate [430.6(a)(2)].
8. **Large motor branch circuit.** Fuse larger than 600 A. [436.52(c) and 430.52(c)(1) Exceptions 2(d)]. For large motors, size Low-Peak KRP-C-SP time-delay fuse at 175% to 300% of the motor full-load current**, depending on the starting method; i.e., part-winding starting, reduced voltage starting, etc.
9. **Power factor correction capacitors.** [460.8(b)]. Size dual-element fuses as low as practical, typically 150% to 175% of capacitor rated current.
10. **Transformer primary fuse (without secondary fuse protection).** [450.3(b)] When transformer primary current is equal to or greater than 9 amps, the dual-element, time-delay fuse should be sized at 125% of transformer primary current or the next size larger if 125% does not correspond to a standard fuse size. Note: Secondary conductors must be protected from overcurrent damage per Article 240.
11. **Transformer primary fuse (with secondary fuse protection).** [450.3(b)] May be sized at 250% of transformer primary current if the secondary is fused per 12 below.
12. **The secondary fuse is sized at no more than 125% of secondary full-load current.** [450.3(b)] Note: Secondary conductors must be protected at their ampacities per Article 240.

### Non-time delay and all Class CC fuses

**(FCF, JKS, KTN-R, KTS-R, JJN, JJS, LP-CC, KTK-R and FNQ-R)**

1. **Main service.** Size fuse according to method in 4.
2. **Feeder circuit with no motor loads.** (215.3) The fuse size must be at least 125% of the continuous load† plus 100% of the non-continuous load. Do not size larger than the conductor's ampacity.*
3. **Feeder circuit with all motor loads.** (430.62) Size the fuse at 300% of the largest motor's full-load current** plus the full-load current** of all other motors.
4. **Feeder circuit with mixed loads.** (430.62) Size fuse at sum of:
   a. 300% of the full-load current** of the largest motor, plus
   b. 100% of the full-load current** of all other motors, plus
   c. 125% of the continuous, non-motor load†, plus
   d. 100% of the non-continuous, non-motor load
5. **Branch circuit with no motor loads.** (210.20) The fuse size must be at least 125% of the continuous load† plus 100% of the non-continuous load. Do not size larger than the conductor's ampacity.*

**6a. Motor branch circuit with overload relays.** (430.52) Size the fuse at 300% of the full load current**. Provides branch circuit short-circuit and ground fault protection only. Other means must be utilized to provide motor overload protection (see 430.32). (If 300% is not a standard fuse amp rating, 430.52(C)(1) Exception 1 permits the next standard fuse amp rating. If the motor cannot start with this size fuse, 430.52(C)(1) Exception 2 permits increasing the fuse size up to 400% provided the fuse rating does not exceed 600 A.)

**6b. Motor branch circuit short-circuit and ground fault protection (430.52) as well as backup overload protection.** Not applicable for non-time-delay fuses; use FRN-R and FRS-R, Class RK5, dual-element time-delay fuses or LPN-RK-SP and LPS-RK-SP Class RK1, dual-element, time-delay fuses (see 6b under dual-element time-delay fuse selection). Non-time-delay fuses cannot be sized close enough to provide motor running backup overload protection. If sized for motor overload backup protection, non-time-delay fuses would open due to motor starting current.

7. **Motor branch circuit with only fuse protection.** Not applicable for non-time-delay fuses; use FRN-R and FRS-R, Class RK5, dual-element time-delay fuses (see 7 under dual-element time-delay fuse selection). Non-time-delay fuses cannot be sized close enough to provide motor running overload protection. If sized for motor overload protection, non-time-delay fuses would open due to motor starting current.
8. **Power factor correction capacitors.** [460.8(B)] Size non-time-delay fuses as low as practical, typically 250% to 300% of capacitor rated current.

### Conductor ampacity selection

1. **Feeder circuit and main circuit with mixed loads.** (430.24) conductor ampacity at least sum of:
   a. 100%†† of the full-load current** of the largest motor, plus
   a. 100% of the full-load current** of all other motors, plus
   c. 125% of the continuous, non-motor load†, plus
   d. 100% of the non-continuous, non-motor load
2. **Feeder circuit with no motor load.** [215.2(a)(1)] Conductor ampacity at least 125% of the continuous load plus 100% of the non-continuous load.
3. **Feeder circuit with all motor loads.** (430.24) Conductor ampacity at least 125% of the largest motor full-load amps plus 100% of all other motors' full-load amps.
4. **Feeder circuit with mixed loads.** (430.24) Size according to method 1 above.
5. **Branch circuit with no motor load.** [210.19(a)(10] Conductor ampacity at least 125% of the continuous load plus 100% of the non-continuous load.

**6, 7 and 8. Motor branch circuits.** (430.22) Conductor ampacity at least 125% of the motor full-load current.

9. **Capacitor connected to motor branch circuit.** (460.8) Conductor ampacity at least 135% of capacitor rated current, and at least 1/3 the motor circuit conductors' ampacity.

**10, 11. Conductor ampacity minimum 125% of transformer full-load current.**

**12. Conductor ampacity per 1 above.**

† 100% of the continuous load can be used rather than 125% when the switch and fuse are listed for 100% continuous operation as an assembly (e.g., 215.3 Exc 1). Some bolted pressure switches and high pressure contact switches 400 A to 6000 A with Class J and L fuses in specified assemblies are listed for 100% continuous operation.

* Where conductor ampacity does not correspond to a standard fuse amp rating, the next higher amp rating fuse is permitted when 800 A or less [(240.4(B)]. Above 800 A the conductor ampacity must be equal or greater than the fuse amp rating [(240.4(C)]. However, per 240.91(B), when above 800 A for supervised industrial installations, the conductor ampacity is permitted to be 95% of the fuse amp rating as long as the equipment is listed for that size conductor and the conductor is protected within its time vs. current limits [240.4 Informational Note].

Δ In many motor feeder applications dual-element fuses can be sized at ampacity of feeder conductors.

• Available short-circuit current and the clearing time of the overcurrent device must be considered so that the conductor's ICEA (P32.382) withstand rating is not exceeded.

** On general motor applications, motor full load amps for calculating conductor ampacity and for calculating fuse amp ratings for motor branch circuit short-circuit and ground fault protection (430.52) are selected from NEC Tables 430.247 through 430.250 per 430.6(A)(1). However, the motor nameplate current rating is used for sizing motor overload protection (430.32) per 430.6(A)(2).

†† 430.52(C)(1) allows a maximum of 175% for time-delay fuses, for all but wound rotor and DC motors. A range of 150% to 175% was used for these guidelines, even though 430.52(C)(1) allows a maximum of 175% for time-delay fuses as stated above. The reason for showing this range is to highlight the possibility for application selection. In some situations, there may be a difference in the switch amp rating or fuse block amp rating in selecting 150% versus 175%. Using 175% is permitted and is suggested for heavy starting current or longer starting time applications.
Further note: the NEC permits larger sizing via two exceptions. 430.52(C)(1) Exception 1 permits the next standard size if 175% does not correspond with a standard fuse amp rating. If the motor cannot start with this size fuse, 430.52(C)(1) Exception 2 permits increasing a time-delay fuse size up to 225%.
(Note that while a time-delay fuse may not exceed 225% when using Exception 2, using a time-delay fuse could exceed 225% when applying Exception 1. For example, assume a motor with a FLA of 1.0 amp. 430.52(C)(1) would allow a 1.75 amp fuse. Exception 1 would allow a 3 amp time-delay fuse per 240.6(A). Exception 2 limits the time-delay fuse to 2.25 amps as a maximum, but Exception 2 is not utilized or needed if Exception 1 is adequate.)

*** The conductor ampacity may have to be greater due to using adjustment or correction factors per 210.(19)(A)(1) and 215.2(A)(1).

## Selective coordination

While important, selecting overcurrent protective devices (OCPDs) based solely on their ability to carry system load current and interrupting the maximum fault current at their respective application points is not enough. As the demand for power system reliability increases, the OCPD's performance in the system becomes more and more critical as its function should, ideally, limit a power system outage to only that portion of the circuit which is faulted. The selected OCPD types and ratings (or settings) determine whether they are selectively coordinated upstream and downstream in a system so that only the nearest upstream OCPD will open for the full range of overcurrents and opening times, and leave the remainder of the system undisturbed to preserve service continuity.

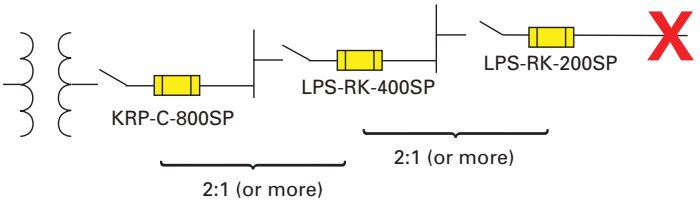


**Figure 1** Low-Peak fuses applied with a simple 2:1 amp rating ratio achieves selective coordination.

Figure 1 shows the minimum amp rating ratios for Bussmann series Low-Peak fuses required to provide "selective coordination" (discrimination) between upstream and downstream fuses.

It's a simple matter to selectively coordinate a system using published fuse amp rating ratio tables and maintaining the minimum ratios between an upstream and downstream fuse. This will ensure selective coordination is achieved for all fault currents up to the fuse's interrupting rating. These selectivity ratios are for all overcurrent levels up to the fuse interrupting or 200 kA, whichever is lower.

For an in-depth examination of this subject, see selective coordination in Section 4 of the Selecting Protective Devices handbook, publication number 3002.

### Coordination, Selective (selective coordination)

Localization of an overcurrent condition to restrict outages to the circuit or equipment affected, accomplished by the selection and installation of overcurrent protective devices and their ratings or settings for the full range of available overcurrents, from overload to the maximum available fault current, and for the full range of overcurrent protective device opening times associated with those overcurrents.

Selective coordination is mandatory per the NEC for the circuit paths of some vital loads on specific systems including:

- Elevator circuits — 620.62
- Critical operations data systems — 645.27
- Campus style fire pumps — 695.3
- Emergency systems — 700.32
- Legally required standby systems — 701.27
- Critical operations power systems — 708.54

### Bussmann series fuse selectivity ratios

This selectivity ratio table identifies the fuse amp rating ratios that ensure selective coordination.

| Circuit | | | | Downstream / loadside fuse | | | | | | | | | | | |
|---|---|---|---|---|---|---|---|---|---|---|---|---|---|---|---|
| Amp rating range → | | | | 601-6000 A | 601-4000 A | 1-100 A | 0-600 A | | | 601-6000 A | 0-600 A | 0-1200 A | 0-600 A | 0-60 A | 0-30 A |
| | Fuse type → | | | Time-delay | Time-delay | Time-delay | Dual-element, time-delay | | | Fast-acting | Fast-acting | Fast-acting | Fast-acting | Time-delay | |
| | | Trade name (fuse class) → | | Low-Peak (L) | Limitron (L) | CUBEFuse (CF[2]) | Low-Peak (J) | Low-Peak (RK1) | Fusetron (RK5) | Limitron (L) | Limitron (RK1) | Limitron (T) | Limitron (J) | SC (G) | (CC) |
| | | | Bussmann fuse symbol | KRP-C_SP | KLU | TCF | LPJ-SP | LPN-RK-SP LPS-RK-SP | FRN-R FRS-R | KTU | KTN-R KTS-R | JJN JJS | JKS | SC | LP-CC FNQ-R KTK-R |
| Upstream / lineside fuse: 601 to 6000 A | Time-delay | Low-Peak (L) | KRP-C-SP | 2:1 | 2.5:1 | 2:1 | 2:1 | 2:1 | 4:1 | 2:1 | 2:1 | 2:1 | 2:1 | 2:1 | 2:1 |
| 601 to 4000 A | Time-delay | Limitron (L) | KLU | 2:1 | 2:1 | 2:1 | 2:1 | 2:1 | 4:1 | 2:1 | 2:1 | 2:1 | 2:1 | 2:1 | 2:1 |
| 0 to 600 A | Dual-element | Low-Peak (RK1) | LPN-RK-SP LPS-RK-SP | — | — | 2:1 | 2:1 | 2:1 | 8:1 | — | 3:1 | 3:1 | 3:1 | 4:1 | 2:1 |
| 0 to 600 A | Dual-element | Low-Peak (J) | LPJ-SP | — | — | 2:1 | 2:1 | 2:1 | 8:1 | — | 3:1 | 3:1 | 3:1 | 4:1 | 2:1 |
| 0 to 100 A | Dual-element | CUBEFuse (CF[2]) | TCF | — | — | 2:1 | 2:1 | 2:1 | 8:1 | — | 3:1 | 3:1 | 3:1 | 4:1 | 2:1 |
| 0 to 600 A | Dual-element | Fusetron (RK5) | FRN-R FRS-R | — | — | 1.5:1 | 1.5:1 | 1.5:1 | 2:1 | — | 1.5:1 | 1.5:1 | 1.5:1 | 1.5:1 | 2:1 |
| 601 to 6000 A | Fast-acting | Limitron (L) | KTU | 2:1 | 2.5:1 | 3:1 | 3:1 | 3:1 | 6:1 | 2:1 | 2:1 | 2:1 | 2:1 | 2:1 | 2:1 |
| 0 to 600 A | Fast-acting | Limitron (RK1) | KTN-R KTS-R | — | — | 3:1 | 3:1 | 3:1 | 8:1 | — | 3:1 | 3:1 | 3:1 | 4:1 | — |
| 0 to 1200 A | Fast-acting | Limitron (T) | JJN JJS | — | — | 3:1 | 3:1 | 3:1 | 8:1 | — | 3:1 | 3:1 | 3:1 | 4:1 | — |
| 0 to 600 A | Fast-acting | Limitron (J) | JKS | — | — | 3:1 | 3:1 | 3:1 | 8:1 | — | 3:1 | 3:1 | 3:1 | 4:1 | — |
| 0 to 60 A | Time-delay | SC (G) | SC | — | — | 3:1 | 3:1 | 3:1 | 4:1 | — | 2:1 | 2:1 | 2:1 | 2:1 | — |

**General notes:** Ratios given in this table apply to only Bussmann fuses. When fuses are within the same case size, consult Bussmann.

1. Where applicable, ratios are valid for indicating and non-indicating versions of the same fuse. At some values of fault current, specified ratios may be lowered to permit closer fuse sizing. Consult Bussmann.
2. Time-delay Class CF TCF CUBEFuse OCPDs are 1 to 100 A Class J performance; dimensions and construction are a unique, finger-safe design.

## Low voltage, branch circuit fuse types and classes

The NEC defines the branch circuit OCPD as capable of providing protection for service, feeder and branch circuits, and equipment over the full range of overcurrents between its rated current and its interrupting rating. They're also the only OCPDs the NEC permits to be installed in a building's electrical system. The definition found in Article 100 is as follows:

"Overcurrent Protective Device, Branch Circuit. A device capable of providing protection for service, feeder, and branch-circuits and equipment over the full-range of overcurrents between its rated current and its interrupting rating. Such devices are provided with interrupting ratings appropriate for the intended use but no less than 5,000 amperes."

Per this definition, branch circuit OCPDs are suitable to protect branch or feeder circuits and service conductors at any point in the electrical system, and must be capable of protecting against the full range of overcurrents, including overloads and faults. In addition, the OCPD must have an interrupting rating sufficient for the application per NEC 110.9. Branch circuit OCPDs meet common, minimum standard requirements for spacing and operating time-current characteristics defined by UL.

The table below contains the acceptable fuses that can be used for branch circuit protection.

| Device type | Acceptable devices | Bussmann series fuses |
|---|---|---|
| UL 248 branch circuit fuses | Class CC | LP-CC, FNQ-R, KTK-R |
| | Class CF | TCF, FCF |
| | Class G | SC |
| | Class H(K) | NON, NOS |
| | Class J | LPJ-, JKS, DFJ |
| | Class L | KRP-C, KLU, KTU |
| | Class RK1 | LPN-RK, LPS-RK, KTN-R, KTS-R |
| | Class RK5 | FRN-R, FRS-R |
| | Class T | JJN, JJS |
| | Plug fuses | W, T, TL, S, SL |

The UL 248 fuse standards cover distinct low-voltage (600 volts or less) fuse classes. Of these, modern current-limiting fuse Classes CC, CF, G, J, L, R and T are the most important. The branch circuit current-limiting fuses' rejection feature helps ensure electrical system safety over its life because it prevents installing other fuse types or larger case sizes. Thus, fuses that cannot provide a comparable minimum protection level for critical ratings and performance cannot be inadvertently installed.

This is inherent in all current-limiting fuse classes. Each fuse class must meet:

- Maximum let-through limits ($I_p$ and $I^2t$) during fault conditions
- Minimum voltage ratings
- Minimum 200 kA interrupting ratings for Class CC, CF, J, L, R and T
- Physical rejection of
  - Different fuse classes and case sizes*
  - Non current-limiting fuses

* Branch circuit fuse blocks and holders are made to hold a fuse class case size that corresponds to a particular amp range. This prevents fuses from the same class with a larger case size from being installed and helps prevent overfusing. There are instances where it is desirable to install a class fuse with a smaller case size than the block or holder. For these situations, it is permitted to use fuse reducers.

These product standards ensure branch circuit fuses provide specific, minimum circuit protection when current-limiting fuses and equipment are used. A given fuse class will ensure the voltage and interrupting rating, and degree of current limitation for the electrical system's life.

For example, by using Class J fuses and equipment, only Class J fuses can be installed. This ensures the voltage rating is always 600 V (whether the system is 120, 208, 480, or 575 V), the interrupting rating is at least 200 kA, and the fault current protection provided by its current-limiting, let-through characteristics. If the fuse needs replacing, only a Class J fuse can be installed.

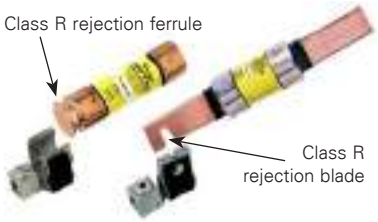


Class R fuse rejection clips (restriction on the ferrule or notch on the blade) that will only accept Class R fuses.

### Common current-limiting Bussmann series fuses

**FRN-R** — Class RK5, 250 V, 200 kA IR up to 600 A

**LPN-RK** — Class RK1, 250 V, 300 kA IR up to 600 A

**FRS-R** — Class RK5, 600 V, 200 kA IR up to 600 A

**LPS-RK** — Class RK1, 600 V, 300 kA IR up to 600 A

**LPJ** — Class J, 600 V, 300 kA IR up to 600 A

**LP-CC, FRQ-R, KTK-R** — Class CC, 600 V, 200 kA IR up to 30 A

**JJN** — Class T, 300 V, 200 kA IR up to 1200 A

**JJS** — Class T, 600 V, 200 kA IR up to 800 A

## Glossary of common electrical terms

**Ampere (amp) —** The measurement of intensity of rate of flow of electrons in an electrical circuit. An amp is the amount of current that will flow through a resistance of one ohm under a pressure of one volt.

**Amp rating —** The current-carrying capacity of a fuse. When a fuse is subjected to a current above its amp rating, it will open the circuit after a predetermined period of time.

**Amp squared seconds, $I^2t$ —**The measure of heat energy developed within a circuit during the fuse's clearing. It can be expressed as "Melting $I^2t$", "Arcing $I^2t$" or the sum of them as "Clearing $I^2t$". "I" stands for effective let-through current (RMS), which is squared, and "t" stands for time of opening, in seconds.

**Arcing time —** The amount of time from the instant the fuse link has melted until the overcurrent is interrupted, or cleared.

**Breaking capacity —** (See Interrupting rating)

**Cartridge fuse —** A fuse consisting of a current responsive element inside a fuse tube with terminals on both ends.

**Class CC fuse —** 600 V, 200 kA amp interrupting rating, branch circuit fuses with overall dimensions of 13/32" x 1-1/2". Their design incorporates a rejection feature that allows them to be inserted into rejection fuse holders and fuse blocks that reject all lower voltage, lower interrupting rating 13/32" x 1-1/2" fuses. They are available from 1/10 through 30 amps.

**Class CF fuse —** A finger-safe UL Listed branch circuit rated fuse. Available in time-delay or fast-acting versions, the Class CF fuse has Class J electrical performance and is available in ratings from 1 to 100 A in 30, 60 and 100 A case sizes.

**Class G fuse —** A size rejecting branch circuit fuse in ratings from 1/2 through 20 amps (600 Vac) and 25 through 60 amps (480 Vac) with a 100 kA interrupting rating. The size rejecting feature helps to eliminate overfusing. The fuse diameter is 13/32" while the length varies from 1-5/16" to 2-1/4".

**Class H fuse —** 250 V and 600 V, 10 kA interrupting rating branch circuit fuses that may be renewable or non-renewable. These are available in ratings from 70 through 600 amps.

**Class J fuse —** These rejection style fuses are rated to interrupt a minimum of 200 kA AC. They are labeled as "current-limiting", are rated for 600 Vac and are not interchangeable with other classes. They are available from 1 through 600 amps.

**Class K fuses —** These are fuses listed as K-1, K-5, or K-9 fuses. Each subclass has designated $I^2t$ and $I_p$ maximums. These are dimensionally the same as Class H fuses, and they can have interrupting ratings of 50 kA, 100 kA, or 200 kA. While these fuses are current-limiting, they are not marked "current-limiting" on their label since they do not have a rejection feature.

**Class L fuse —** These fuses are rated for 601 through 6000 amps, and are rated to interrupt a minimum of 200 kA AC. They are labeled "current-limiting" and are rated for 600 Vac. They are intended to be bolted into their mountings and are not normally used in clips. Some Class L fuses have designed-in time-delay features for all purpose use.

**Class R fuse —** These are high performance fuses rated 1/10 through 600 amps in 250 V and 600 V ratings. All are marked "current-limiting" on their label and all have a minimum of 200 kA interrupting rating. They have identical outline dimensions with the Class H fuses but have a rejection feature that prevents the user from mounting a fuse of lesser capabilities (lower interrupting capacity) when used with special Class R Clips. Class R fuses will fit into either rejection or non-rejection clips.

**Class T fuse —** An industry class of 300 V and 600 V fuses in ratings from 1 through 1200 amps (300 V) and 1 through 800 amps (600 V). They are physically very small and can be applied where space is at a premium. They are fast-acting fuses, with an interrupting rating of 200 kA RMS.

**Classes of fuses —** The industry has developed basic physical specifications and electrical performance requirements for fuses with voltage ratings of 600 V or less. These are known as standards. If a type of fuse meets the requirements of a standard, it can fall into that class. Typical UL branch circuit fuse classes are CC, CF, G, H, J, K, L, RK1, RK5 and T.

**Clearing time —** The total time between the beginning of the overcurrent and the final opening of the circuit at rated voltage by an overcurrent protective device. Clearing time is the total of the melting time and the arcing time.

**Current limitation —** A fuse operation relating to short-circuits only. When a fuse operates in its current-limiting range, it will clear a short-circuit in less than 1/2 cycle. Also, it will limit the instantaneous peak let-through current to a value substantially less than that obtainable in the same circuit if that fuse were replaced with a solid conductor of equal impedance.

**Dual-element fuse —** A fuse with a special design that utilizes two individual-elements in series inside the fuse tube. One element, the spring actuated trigger assembly, operates on overloads up to 5 - 6 times the fuse current rating. The other element, the short-circuit section, operates on short-circuits up to its interrupting rating.

**Electrical load —** The part of the electrical system that actually uses the energy or does the work required.

**Fast-acting fuse —** A fuse that opens on overload and short-circuits very quickly. This type of fuse is not designed to withstand temporary overload currents associated with some electrical loads, when sized near the full load current of the circuit.

**Fault current —** Fault currents can be short-circuit currents, ground fault currents or arcing fault currents.

**Fuse —** An overcurrent protective device with a fusible link that operates and opens the circuit on an overcurrent condition.

**High speed fuse —** A fuse with no intentional time-delay in the overload range and designed to open as quickly as possible in the short-circuit range. These fuses are often used to protect solid-state devices.

**Inductive load —** An electrical load which pulls a large amount of current – an inrush current – when first energized. After a few cycles or seconds, the current "settles down" to the full-load running current.

**Interrupting rating —** The rating which defines a fuse's ability to safely interrupt and clear short-circuits. This rating is much greater than the amp rating of a fuse. The NEC defines interrupting rating as "The highest current at rated voltage that an overcurrent protective device is intended to interrupt under standard test conditions."

**Melting time —** The amount of time required to melt the fuse link during a specified overcurrent. (See arcing time and clearing time.)

**"NEC" Dimensions —** These are dimensions once referenced in the NEC. They are common to Class H and K fuses and provide interchangeability between manufacturers for fuses and fusible equipment of given amp and voltage ratings.

**Ohm —** The unit of measure for electric resistance. An ohm is the amount of resistance that will allow one amp to flow under a pressure of one volt.

**Ohm's Law —** The relationship between voltage, current, and resistance, expressed by the equation E = IR, where E is the voltage in volts, I is the current in amps, and R is the resistance in ohms.

**One time fuse —** Generic term used to describe a Class H non-renewable cartridge fuse, with a single-element.

**Overcurrent —** Any current in excess of the rated current of equipment or the ampacity of a conductor. It may result from overload, short-circuit or ground fault. (Ref. NEC Article 100.)

**Overload —** Operation of equipment in excess of normal, full load rating, or of a conductor in excess of rated ampacity that, when it persists for a sufficient length of time, would cause damage or dangerous overheating. A fault, such as a short-circuit or ground fault, is not an overload. (Ref. NEC Article 100.)

**Peak let-through current, $I_p$ —** The instantaneous value of peak current let-through by a current-limiting fuse, when it operates in its current-limiting range.

**Renewable fuse (600 V and below) —** A fuse in which the element, typically a zinc link, may be replaced after the fuse has opened, and then reused. Renewable fuses are made to Class H standards.

**Resistive load —** An electrical load which is characteristic of not having any significant inrush current. When a resistive load is energized, the current rises instantly to its steady-state value, without first rising to a higher value.

**RMS current —** The RMS (root-mean-square) value of any periodic current is equal to the value of the direct current which, flowing through a resistance, produces the same heating affect in the resistance as the periodic current does.

**Semiconductor fuse —** Fuses used to protect solid-state devices. See "high speed fuse."

**Short-circuit —** Can be classified as an overcurrent which exceeds the normal full load current of a circuit by a factor many times (tens, hundreds or thousands greater). Also characteristic of this type of overcurrent is that it leaves the normal current carrying path of the circuit – it takes a "short cut" around the load and back to the source.

**Short-circuit current rating (SCCR) —** This term applies to components (single devices) and assemblies (equipment). For the component, it is the maximum fault current it can sustain without the occurrence of excessive damage. For equipment, it is the assembly's rating, generally limited by the lowest component SCCR in the circuit as determined by an approved method such as UL 508A, Supplement SB.

**Short-circuit withstand —** The maximum current that an unprotected electrical component can sustain for a specified period of time without the occurrence of extensive damage. Typically applies to devices or components that do not have a marked short-circuit current rating, such as conductors, transfer switches or semiconductor devices.

**Single-phasing —** The condition that occurs when one phase of a three-phase system opens, either in a low voltage (secondary) or high voltage (primary) distribution system. Primary or secondary single-phasing can be caused by any number of events. This condition results in unbalanced currents in polyphase motors and unless protective measures are taken, may cause overheating and failure.

**Threshold current —** The symmetrical RMS (root mean square) available current at the threshold of the current-limiting range, where the fuse becomes current-limiting when tested to the industry standard. This value can be read off a peak let-through chart where the fuse curve intersects the A—B line. A threshold ratio is the relationship of the threshold current to the fuse's continuous current rating.

**Time-delay fuse —** A fuse with a built-in delay that allows temporary and harmless inrush currents to pass without opening, but is so designed to open on sustained overloads and short-circuits.

**Voltage rating —** The maximum open circuit voltage in which a fuse can be used, yet safely interrupt an overcurrent. Exceeding the voltage rating of a fuse impairs its ability to clear an overload or short-circuit safely.

## Electrical formulas

| To find | Single-phase | Two-phase | Three-phase | Direct current |
|---|---|---|---|---|
| Amps when kVA is known | $\frac{\text{kVA x 1000}}{\text{E}}$ | $\frac{\text{kVA x 1000}}{\text{E x 2}}$ | $\frac{\text{kVA x 1000}}{\text{E x 1.73}}$ | Not applicable |
| Amps when horsepower is known | $\frac{\text{Hp x 746}}{\text{E x \% eff. x pf}}$ | $\frac{\text{Hp x 746}}{\text{E x 2 x \% eff. x pf}}$ | $\frac{\text{Hp x 746}}{\text{E x 1.73 x \% eff. x pf}}$ | $\frac{\text{Hp x 746}}{\text{E x \% eff.}}$ |
| Amps when kilowatts are known | $\frac{\text{kW x 1000}}{\text{E x pf}}$ | $\frac{\text{kW x 1000}}{\text{E x 2 pf}}$ | $\frac{\text{kW x 1000}}{\text{E x 1.73 x pf}}$ | $\frac{\text{kW x 1000}}{\text{E}}$ |
| Kilowatts | $\frac{\text{I x E x pf}}{1000}$ | $\frac{\text{I x E x 2 x pf}}{1000}$ | $\frac{\text{I x E x 1.73 x pf}}{1000}$ | $\frac{\text{I x E}}{1000}$ |
| Kilovolt-amps | $\frac{\text{I x E}}{1000}$ | $\frac{\text{I x E x 2}}{1000}$ | $\frac{\text{I x E x 1.73}}{1000}$ | Not applicable |
| Horsepower | $\frac{\text{I x E \% eff. x pf}}{746}$ | $\frac{\text{I x E x 2 x \% eff. x pf}}{746}$ | $\frac{\text{I x E x 1.73 x \% eff. x pf}}{746}$ | $\frac{\text{I x E x \% eff.}}{746}$ |
| Watts | E x I x pf | I x E x 2 x pf | I x E x 1.73 x pf | E x I |
| Energy efficiency | | $\frac{\text{Load horsepower x 746}}{\text{Load input kVA x 1000}}$ | | |
| Power factor (pf) | $\frac{\text{Power consumed}}{\text{Apparent power}}$ = | $\frac{\text{W}}{\text{VA}}$ or | $\frac{\text{kW}}{\text{kVA}}$ = cosØ | |

Where: I = Amps, E = Volts, Hp = Horsepower, kVA = Kilovolt-amps, kW = Kilowatts, pf = Power factor, % eff. = Percent efficiency

## FuseFinder fuse and fuse block cross reference

Eaton, the leader in circuit protection, power management and electrical safety offers an extensive selection of Bussmann series fuses and fuse blocks to meet your overcurrent protection needs.

If you need to find a replacement to another manufacturer's glass tube, low voltage branch and supplemental or high speed fuse, or fuse block or holder, use this quick cross reference FuseFinder to identify the Bussmann series replacement.

If you cannot find a product cross, more extensive listings are available online at Eaton.com/bussmannseries/FuseFinder.

Or email our Application Engineers at FuseTech@Eaton.com.

### Fuse cross reference

| Competitor | Bussmann series | Competitor | Bussmann series | Competitor | Bussmann series |
|---|---|---|---|---|---|
| 0481(amp) | GMT-(amp)A | 413(amp) | MDM-(amp) | ATMR(amp) | KTK-R(amp) |
| 211(amp) | GDC-(amp) | 414(amp) | ABS-(amp) | ATQ(amp) | FNQ-(amp) |
| 212(amp) | GDB-(amp) | 417(amp) | ABS-(amp) | ATQR(amp) | FNQ-R-(amp) |
| 213(amp) | GDC-(amp) | 418(amp) | TR/3216FF-(amp) | BBC(amp) | ABC-(amp) |
| 215(amp) | S505-(amp) | 429(amp) | 3216FF(amp) | BDB(amp) | GDB-(amp) |
| 216(amp) | GDA-(amp) | 431(amp) | 0603FA(amp) | BDC(amp) | GDC-(amp) |
| 217(amp) | GDB-(amp) | 5140(amp) | BAF-(amp) | BDL(amp) | MDL-(amp) |
| 218(amp) | GDC-(amp) | 5170(amp) | AGU-(amp) | BGC(amp) | AGC-(amp) |
| 221(amp) | S505-V-(amp) | 523(amp) | FNM-(amp) | BGX(amp) | AGX-(amp) |
| 226(amp) | GDA-V-(amp) | 5HF(amp) | GDA-(amp) | BLF(amp) | BAF-(amp) |
| 227(amp) | GDB-V-(amp) | 5HFP(amp) | GDA-V-(amp) | BLN(amp) | BAN-(amp) |
| 228(amp) | GDC-V-(amp) | 5HT(amp) | S505-(amp)A | BLS(amp) | BBS-(amp) |
| 230(amp) | C515-(amp) | 5MF(amp) | GMA-(amp) | BMA(amp) | GDA-(amp) |
| 235(amp) | GMA-(amp) | 5MFP(amp) | GMA-V-(amp) | CBO(amp) [4-160A] | HBO-(amp) |
| 236(amp) | GMA-V-(amp) | 5SF(amp) | GDB-(amp) | CCK(amp) [1-300A] | ACK-(amp) |
| 238(amp) | GMD-V-(amp) | 5ST(amp) | GDC-(amp) | CCL(amp) [30-100A] | ACL-(amp) |
| 239(amp) | GMD-(amp) | 6J(amp)X | KTK-(amp) | CCLB(amp) [20-250A] | KGJ-E-(amp) |
| 257(amp) | ATC-(amp) | 6R(amp)D | LPS-RK-(amp)SP | CCLW(amp) [1-300A] | KGJ-(amp) |
| 297(amp) [auto fuse] | ATM-(amp) | 702(amp) | HVJ-(amp) | CCMR [1-30A Only] | LP-CC(amp) |
| 299(amp) | MAX-(amp) | 703(amp) | HVL-(amp) | CDNC(amp) | CDN(amp)†† |
| 2AG220 | C517-(amp) | 81200(amp)ST | CBS-(amp) | CDSC(amp) | CDS(amp)††† |
| 2AG230 | C515-(amp) | A70P(amp)-1 or Type 1 | FWP-(amp)A14F | CNL(amp) | ANL-(amp) |
| 301(amp) | AGA-(amp) | A70P(amp)-4 or Type 4 | FWP-(amp)A orB | CNN(amp) | ANN-(amp) |
| 303(amp) | AGW-(amp) | A70Q(amp)-4 or Type 4 | FWP-(amp)A or B | DCT [1-15A] | PV-(amp)A10F |
| 307(amp) | SFE-(amp) | A70QS(amp)-14F | FWP-(amp)A14F | E(amp)FC | (amp)FC |
| 311(amp) | AGC-(amp) | A70QS(amp)-22F | FWP-(amp)A22F | E(amp)FE | (amp)FE |
| 312(amp) | AGC-(amp) | A70QS [35-200]-4 | FWP-(amp)A or B | E(amp)FET | (amp)FET |
| 313(amp) | MDL-(amp) | A70QS [225-400]-4 or 4K | FWP-(amp)A or B | E(amp)FM | (amp)FM |
| 314(amp) | ABC-(amp) | A70QS [450-600]-4K | FWP-(amp)A or B | E(amp)FMM | (amp)FMM |
| 315(amp) | MDL-V-(amp) | A70QS [700-800]-4 | FWP-(amp)A or B | E(amp)LCT [6-20A] | (amp)LCT |
| 318(amp) | AGC-V-(amp) | A50P(amp)-1 | FWH-(amp)A14F | E(amp)LET [25-180A] | (amp)LET |
| 322(amp) | GBB-(amp) | A50P(amp)-4 | FWH-(amp)A or B | E(amp)LMMT [315-900A] | (amp)LMMT |
| 323(amp) | MDA-(amp) | A50QS(amp)-4 or Type 4 | FWH-(amp)A or B | E(amp)LMT [160-450A] | (amp)LMT |
| 324(amp) | ABC-V-(amp) | A30QS(amp)-1 or Type 1 | FWX-(amp)A14F | E100SF(amp) [20-30A] | FWJ-(amp)A14F |
| 325(amp) | MDA-V-(amp) | A30QS [35-700]-4 or Type 4 | FWX-(amp)A | E100S(amp) [40-2000A] | FWJ-(amp) |
| 326(amp) | MDA-(amp) | A30QS [1000-1200]-128 | FWX-(amp)AH | E15S(amp) [35-3000A] | FWA-(amp)A |
| 334(amp) | GLD-(amp) | A15QS [1-30]-2 | FWA-(amp)A10F | E15SF(amp) [5, 10, 15, 20, 25, 30A] | FWA-(amp)A10F |
| 336(amp) | GBA-(amp) | A15QS [35-60]-1 | FWA-(amp)A21F | E25S(amp) [1000-2500A] | FWX-(amp)AH |
| 361(amp) | AGX-(amp) | A15QS [70-400]-4 | FWA-(amp)B | E25S(amp) [35-800A] | FWX-(amp)A |
| 362(amp) | AGX-(amp) | A2D(amp)R | LPN-RK(amp)SP | E25SFX(amp) [5-30A] | FWX-(amp)14F |
| 3770(amp) | SL-(amp) | A2K(amp) | KTN-R(amp) | E50S(amp) | FWH-(amp) |
| 3780(amp) | S-(amp) | A3T(amp) | JJN(amp) | E50SF(amp) [5-30A] | FWH-(amp)14F |
| 3785(amp) | T-(amp) | A4BQ [225-600] | KRP-CL-(amp) | E70S(amp) | FWP-(amp) |
| 3AB(amp) | ABC-(amp) | A4BQ [601-6000] | KRP-C-(amp)SP | ECK(amp) [1-300A] | ACK-(amp) |
| 3ABP(amp) | AGC-V-(amp) | A4BT [601-4000] | KLU [601-4000] | ECL(amp) [30-100A] | ACL-(amp) |
| 3AG(amp) | AGC-(amp) | A4BY(amp) | KLU(amp) | ECN(amp) | FRN-R-(amp) |
| 3AG311(amp) | AGC-(amp) | A4J(amp) | JKS(amp) | ECNR(amp) | FRN-R-(amp) |
| 3AG312(amp) | AGC-(amp) | A6D(amp)R | LPS-RK(amp)SP | ECS(amp) | FRS-R-(amp) |
| 3AG313(amp) | MDL-(amp) | A6K(amp) | KTS-R(amp) | ECSR(amp) | FRS-R-(amp) |
| 3AG315(amp) | MDL-V-(amp) | A6T(amp) | JJS(amp) | ELR(amp) | GLR-(amp) |
| 3AG318(amp) | AGC-V-(amp) | AG(amp) | SC(amp) | ENLE(amp) | ANL-(amp) |
| 3SB(amp) | MDL-(amp) | AJT(amp) | LPJ(amp)SP | ENNE(amp) | ANN-(amp) |
| 3SBP(amp) | MDL-V-(amp) | AM10/(amp) | LP-CC-(amp) | ERN(amp) | REN-(amp)* |
| 401(amp) | GMT-(amp)A | AOK(amp) | ALS-(amp) | ERS(amp) | RES-(amp)** |
| 411(amp) | ABS-(amp) | ATDR(amp) | LP-CC-(amp) | ESA(amp) | S-(amp) |
| 412(amp) | ABS-(amp) | ATM(amp) | KLM(amp) | FA(amp) | SA(amp) |

* >60 A use FRN-R (250 V) ** >60 A use FRS-R (600 V) † >12 A use TL †† <10 A use FRN-R (600 V) ††† <10 A use FRS-R (600 V)

## Fuse cross reference

| Competitor fuse family | Bussmann series | Competitor fuse family | Bussmann series | Competitor fuse family | Bussmann series |
|---|---|---|---|---|---|
| FII(amp) | CGL-(amp) | KLH(amp) [225-600A] | FWH-(amp)A | MEN(amp) | FNM-(amp) |
| FIIC(amp) | CGL-(amp) | KLH(amp) [35-200A] | FWH-(amp)B | MEQ(amp) | FNQ-(amp) |
| FIIM(amp) [125-200A] | (amp)M14CB | KLK(amp) | KTK-(amp) | MJS(amp) | C515-(amp) |
| FIIM(amp) [80-100A] | (amp)L09CB | KLKR(amp) | KTK-R-(amp) | MOL(amp) | BAF-(amp) |
| FLA(amp) | FNA-(amp) | KLLU(amp) | KLU-(amp) | NCL(amp) | KTN-R-(amp) |
| FLM(amp) | FNM-(amp) | KLMR(amp) | LP-CC-(amp) | NCLR(amp) | KTN-R-(amp) |
| FLN(amp) | FRN-R-(amp) | KLNR(amp) | KTN-R-(amp) | NLN(amp) | NON-(amp) |
| FLNR(amp) | FRN-R-(amp) | KLPC(amp) | KRP-C-(amp)SP | NLS(amp) | NOS-(amp) |
| FLQ(amp) | FNQ-(amp) | KLSR(amp) | KTS-R-(amp) | OT(amp) | NON(amp) |
| FLS(amp) | FRS-R-(amp) | KLW(amp) | FWA-(amp)10F | OTM(amp) | BAF-(amp) |
| FLSR(amp) | FRS-R-(amp) | KON(amp) | NON-(amp) | OTS(amp) | NOS(amp) |
| GFN(amp) | FNA-(amp) | KOS(amp) | NOS-(amp) | RF(amp) | REN(amp)* |
| GGU(amp) | AGU(amp) | L(amp)TD | KRP-C-(amp)SP | RFS(amp) | RES(amp)** |
| GL10/(amp) | KTK-(amp) | L15S(amp) [1-30A] | FWA-(amp)A10F | RLN(amp) | REN-(amp)* |
| HCLR(amp) | KTK-R-(amp) | L15S(amp) [35-60A] | FWA-(amp)A21F | RLS(amp) | RES(amp)** |
| HCTR(amp) | FNQ-R-(amp) | L15S(amp) [70-400A] | FWA-(amp)A | SAO(amp) | SA-(amp) |
| HSJ(amp) | DFJ(amp) | L25S(amp) [1-30A] | FWX-(amp)A14F | SBS(amp) | BBS-(amp) |
| IDSR[6-60A Only] | FRS-R-(amp)ID | L50S(amp) [1-30A] | FWH-(amp)A14F | SCL(amp) | KTS-R-(amp) |
| J(amp) | JKS-(amp) | L70S(amp) [1-30A] | FWP-(amp)A14F | SCLR(amp) | KTS-R-(amp) |
| JDL(amp) | LPJ-(amp)SP | LCU(amp) | KTU-(amp) | SEC(amp) | SC-(amp) |
| JFL(amp) | JKS-(amp) | LEN(amp) | FRN-R-(amp) | SLC(amp) | SC-(amp) |
| JLLN(amp) | JJN-(amp) | LENRK(amp) | LPN-RK-(amp)SP | SLO(amp) | SL-(amp) |
| JLLS(amp) | JJS-(amp) | LES(amp) | FRS-R-(amp) | SOO(amp) | S-(amp) |
| JLS(amp) | JKS-(amp) | LESR(amp) | FRS-R-(amp) | TLO(amp) | TL-(amp) |
| JTD(amp) | LPJ-(amp)SP | LESRK(amp) | LPS-RK-(amp)SP | TOO(amp) | T-(amp) |
| KLA(amp) [5, 10, 15, 20, 25, 30A] | FWA-(amp)A10F | LGR(amp) | GLR-(amp) | TR(amp) | FRN-R-(amp) |
| KLB(amp) [1-30A] | FWX-(amp)A14F | LHR(amp) | HLR(amp) | TRM(amp) | FNM-(amp) |
| KLC(amp) | KAC-(amp) | LKU(amp) | KLU-(amp) | TRS(amp) | FRS-R(amp) |
| KLDR(amp) | FNQ-R-(amp) | LLNRK(amp) | LPN-RK-(amp)SP | WOO(amp) | W-(amp) |
| KLH(amp) [1-30A] | FWH-(amp)A14F | LLSRK(amp) | LPS-RK-(amp)SP | | |

* >60 A use FRN-R (250 V) ** >60 A use FRS-R (600 V) † >12 A use TL. †† <10 A use FRN-R (600 V) ††† <10 A use FRS-R (600 V)

## Fuse block and holder cross reference

| Competitor | Bussmann series | Competitor | Bussmann series | Competitor | Bussmann series |
|---|---|---|---|---|---|
| LFJ60030(X)/(X)ID | JM60030-(X)CR | 6030(X)J | JM60030-(X)CR | (R)6J30A(X)S | JM60030-(X)CR |
| LFJ60060(X)/(X)ID | JM60060-(X)CR | 6060(X)J | JM60060-(X)CR | (R)6J60A(X)B | JM60060-(X)CR |
| LFJ60100(X)/(X)ID | JM60100-(X)CR*** | 610(XX)J | JM60100-(X)CR*** | R6J100A(X)B | JM60100-(X)CR*** |
| LFJ60200(X)/(X)ID | JM60200-(X)CR*** | 620(XX)J | JM60200-(X)CR*** | 6J200A(X)BFBD | JM60200-(X)CR*** |
| LFJ60400(X)/(X)ID | JM60400-(X)CR*** | 640(XX)J | JM60400-(X)CR*** | 6J400A(X)BFBD | JM60400-(X)CR*** |
| LFJ60600(X)/(X)ID | JM60600-(X)CR*** | 66(XX)J | JM60600-(X)CR*** | 6J600A(X)BFBD | JM60600-(X)CR*** |
| LFR25030(X)/(X)ID | RM25030-(X)CR | 203(XX) | HM25030-(X)CR | R30A(X)(XX) | RM25030-(X)CR |
| LFR25060(X)/(X)ID | RM25060-(X)CR | 206(XX) | HM25060-(X)CR | R60A(X)(XX) | RM25060-(X)CR |
| LFR25100(X)/(X)ID | RM25100-(X)CR*** | 210(XX) | HM25100-(X)CR*** | R100A(X)B | RM25100-(X)CR*** |
| LFR25200(X)/(X)ID | RM25200-(X)CR*** | 220(XX) | HM25200-(X)CR*** | R200A(X)BE | RM25200-(X)CR*** |
| LFR25400(X)/(X)ID | RM25400-(X)CR*** | 240(XX) | HM25400-(X)CR*** | R400A(X)B | RM25400-(X)CR*** |
| LFR25600(X)/(X)ID | RM25600-(X)CR*** | 26(XX) | HM25600-(X)CR*** | R600A(X)B | RM25600-(X)CR*** |
| LFR60030(X)/(X)ID | RM60030-(X)CR | 603(XX) | HM60030-(X)CR | 6R30A(X)(XX) | RM60030-(X)CR |
| LFR60060(X)/(X)ID | RM60060-(X)CR | 606(XX) | HM60060-(X)CR | 6R60A(X)(XX) | RM60060-(X)CR |
| LFR60100(X)/(X)ID | RM60100-(X)CR*** | 610(XX) | HM60100-(X)CR*** | 6R100A(X)B | RM60100-(X)CR*** |
| LFR60200(X)/(X)ID | RM60200-(X)CR*** | 620(XX) | HM60200-(X)CR*** | 6R200A(X)BE | RM60200-(X)CR*** |
| LFR60400(X)/(X)ID | RM60400-(X)CR*** | 640(XX) | HM60400-(X)CR*** | 6R400A(X)B | RM60400-(X)CR*** |
| LFR60600(X)/(X)ID | RM60600-(X)CR*** | 66(XX) | HM60600-(X)CR*** | 6R600A(X)B | RM60600-(X)CR*** |
| LFH25030(X)/(X)ID | HM25030-(X)CR | 203(XX)R | RM25030-(X)CR | (R)F30A(X)(XX) | HM25030-(X)CR |
| LFH25060(X)/(X)ID | HM25060-(X)CR | 206(XX)R | RM25060-(X)CR | (R)F60A(X)(XX) | HM25060-(X)CR |
| LFH25100(X)/(X)ID | HM25100-(X)CR*** | 210(XX)R | RM25100-(X)CR*** | RF100A(X)B | HM25100-(X)CR*** |
| LFH25200(X)/(X)ID | HM25200-(X)CR*** | 220(XX)R | RM25200-(X)CR*** | F200A(X)BE | HM25200-(X)CR*** |
| LFH25400(X)/(X)ID | HM25400-(X)CR*** | 240(XX)R | RM25400-(X)CR*** | RF400A(X)B | HM25400-(X)CR*** |
| LFH25600(X)/(X)ID | HM25600-(X)CR*** | 26(XX)R | RM25600-(X)CR*** | F600A(X)B | HM25600-(X)CR*** |
| LFH60030(X)/(X)ID | HM60030-(X)CR | 603(XX)R | RM60030-(X)CR | (R)6F30A(X)(XX) | HM60030-(X)CR |
| LFH60060(X)/(X)ID | HM60060-(X)CR | 606(XX)R | RM60060-(X)CR | (R)6F60A(X)(XX) | HM60060-(X)CR |
| LFH60100(X)/(X)ID | HM60100-(X)CR*** | 610(XX)R | RM60100-(X)CR*** | R6F100A(X)B | HM60100-(X)CR*** |
| LFH60200(X)/(X)ID | HM60200-(X)CR*** | 620(XX)R | RM60200-(X)CR*** | 6F200A(X)BE | HM60200-(X)CR*** |
| LFH60400(X)/(X)ID | HM60400-(X)CR*** | 640(XX)R | RM60400-(X)CR*** | R6F400A(X)B | HM60400-(X)CR*** |
| LFH60600(X)/(X)ID | HM60600-(X)CR*** | 66(XX)R | RM60600-(X)CR*** | 6F600A(X)B | HM60600-(X)CR*** |
| LFPSJ30(X)/(X)ID | CH30J(X)/(X)I | US3J(X)/(X)I | CH30J(X)/(X)I | 6SJ30A(X)/(X)I | CH30J(X)/(X)I |
| LFPSJ60(X)/(X)ID | CH60J(X)/(X)I | US6J(X)/(X)I | CH60J(X)/(X)I | 6SJ60A(X)/(X)I | CH60J(X)/(X)I |
| LPHV | CHPV | USPV | CHPV | 6SC30A(X)-C/(X)I-C | CHCC(X)DU/(X)DIU |
| LPSC00(X)/(X)ID | CHCC(X)DU/(X)DIU | USCC(X)/(X)I | CHCC(X)DU/(X)DIU | 6SM30A(X)-C/(X)I-C | CHM(X)DU/CHM(X)DIU |
| LPSM00(X)/(X)ID | CHM(X)DU/CHM(X)DIU | USM(X)/(X)I | CHM(X)DU/CHM(X)DIU | | |

*** Finger-safe covers are available for this block along with optional open fuse indication.

1. Some competitor blocks are adder blocks and/or have multiple terminal offerings for Cu/Al or Cu only conductors.
2. Wire ranges are not always the same. Please assure wire range is suitable for the application.
3. All blocks listed have a box lug for wire termination. Alternate connection types are available in the 30 and 60 amp range. If an alternate type is required, please see the appropriate Bussmann series product data sheet for catalog number and ordering information.

## Catalog number index

For information on products not contained in this catalog, contact Customer Satisfaction, toll-free, at 855-287-7626 (855-BUSSMANN) between 7:00 a.m. — 6:00 p.m. Central time, M-F, or email BussCustSat@Eaton.com.


| Catalog no. | Page |
|---|---|
| _CIF06 | 5-4 |
| _CIF21 | 5-4 |
| _CIH07 | 5-5 |
| _CIK07 | 5-5 |
| _CIL14 | 5-5 |
| _CT | 4-17 |
| _D125 | 5-9 |
| _D16 | 5-9 |
| _D27 | 5-9 |
| _D33 | 5-9 |
| _EET | 4-17 |
| _ET | 4-17 |
| _FE | 4-17 |
| _FEE | 4-17 |
| _FM | 4-19 |
| _FMM | 4-19 |
| _H07C | 5-6 |
| _K07CR | 5-6 |
| _L09C | 5-6 |
| _L14C | 5-6 |
| _LCT | 4-15 |
| _LET | 4-15 |
| _LMMT | 4-16 |
| _LMT | 4-16 |
| _M09C | 5-6 |
| _M14C | 5-6 |
| _MMT | 4-19 |
| _MT | 4-19 |
| _NHG000B | 5-10 |
| _NHG000B-690 | 5-11 |
| _NHG00B | 5-10 |
| _NHG00B-690 | 5-11 |
| _NHG01B | 5-10 |
| _NHG02B | 5-10 |
| _NHG03B | 5-10 |
| _NHG0B | 5-10 |
| _NHG1B | 5-10 |
| _NHG1B-690 | 5-11 |
| _NHG2B | 5-10 |
| _NHG2B-690 | 5-11 |
| _NHG3B | 5-10 |
| _NHG3B-690 | 5-11 |
| _NHG4B | 5-10 |
| _NHG4B-690 | 5-11 |
| _NZ01 | 5-9 |
| _NZ02 | 5-9 |
| _P11C | 5-6 |
| _R11C | 5-6 |
| 11675-_ | 9-17 |
| 11725-_ | 9-17 |
| 12ABCNA_ | 7-26 |
| 12CAV_ | 7-26 |
| 12TDLEJ | 7-32 |
| 12THLEJ | 7-32 |
| 12TKLEJ | 7-32 |
| 12TXLEJ | 7-32 |
| 14002-_ | 9-17 |
| 14004-_ | 9-17 |
| 15.5CAV_E | 7-26 |
| 15.5CAVH_E | 7-26 |
| 15087 | 14-10 |
| 15100-_ | 14-7 |
| 15188 | 10-6 |
| 15188J-2-J | 10-6 |
| 155GXQSJ_E | 7-21 |
| 15800-_ | 14-5 |
| 15BHLE-_E | 7-18 |
| 15CLE-_E | 7-15 |
| 15CLE-_E-D | 7-15 |
| 15CLE-_M-C | 7-15 |
| 15CLE-_M-D | 7-15 |
| 15CLE-_M-E | 7-15 |
| 15CLPT-_E | 7-26 |
| 15CLPT-_M-A | 7-29 |
| 15CLPT-_M-B | 7-29 |
| 15HCL-_E | 7-18 |
| 15HLE-_E | 7-15 |
| 15HLE-_M-C | 7-15 |
| 15HLE-_M-D | 7-15 |
| 15HLE-_M-E | 7-15 |
| 15KU_ | 7-33 |
| 15LHLE-_E | 7-15 |
| 15NCLPT-_E-A | 7-26 |
| 15NCLPT-_E-B | 7-26 |
| 15SBR_ | 7-33 |
| 15TB_ | 7-33 |
| 15XAD_ | 7-33 |
| 160_ | 9-9, 15 |
| 162_ | 9-9, 13, 15 |
| 163_ | 9-9, 13, 15 |
| 164_ | 9-9 |
| 165_ | 9-9, 13, 15 |
| 17.5ABGNA_ | 7-26 |
| 17.5CAV_ | 7-26 |
| 17.5TDLSJ | 7-32 |
| 17.5TDMEJ | 7-32 |
| 17.5TFLSJ | 7-32 |
| 17.5THMEJ | 7-32 |
| 17.5TKMEJ | 7-32 |
| 170H0069 | 4-78 |
| 170H023_ | 8-40 |
| 170H0235 | 4-78 |
| 170H0236 | 4-78, 6-5, 11 |
| 170H0237 | 4-78 |
| 170H0238 | 4-78, 6-5, 11 |
| 170H1007 | 4-76 |
| 170H1013 | 4-76 |
| 170H3003 | 4-77 |
| 170H3004 | 4-77 |
| 170H3005 | 4-77 |
| 170H3006 | 4-77 |
| 170M_ | † |
| 175GDMSJ_E | 7-21 |
| 175GFMSJ_E | 7-21 |
| 175GXMSJ_E | 7-21 |
| 175GXQSJ_E | 7-21 |
| 1A0065 | 7-3, 7, 11, 22, 23, 25, 36 |
| 1A1119-_ | 3-15 |
| 1A1120-_ | 3-15 |
| 1A1706-_ | 14-10 |
| 1A1837 | 7-26 |
| 1A1907-_ | 3-15 |
| 1A2294 | 8-47 |
| 1A3398-07-R | 3-15 |
| 1A3399-_ | 3-14 |
| 1A3400-_ | 3-16 |
| 1A4533-_ | 3-15 |
| 1A4534-_ | 3-15 |
| 1A5018-_ | 3-14 |
| 1A5600 | 2-14 |
| 1A5601 | 3-14 |
| 1A5602 | 3-14 |
| 1A5778 | 2-14 |
| 1A5779 | 2-14 |
| 1A5780 | 2-14 |
| 1BS10_ | 4-14, 8-39 |
| 20BS | 5-15 |
| 20LSC | 5-15 |
| 24ABGNA_ | 7-26 |
| 24CAV_ | 7-26 |
| 24TDMEJ | 7-32 |
| 24TFMEJ | 7-32 |
| 24THMEJ | 7-32 |
| 24TXMEJ | 7-32 |
| 258GDQSJ_E | 7-21 |
| 258GXQSJ_E | 7-21 |
| 258GXZSJ_E | 7-21 |
| 25CLPT-_E | 7-26 |
| 25CLPT-_M-A | 7-29 |
| 25KU_ | 7-33 |
| 25SBR_ | 7-33 |
| 25TB_ | 7-33 |
| 25XAD_ | 7-33 |
| 270303 | 7-20, 36 |
| 2778 | 2-2 |
| 2837 | 2-2 |
| 2838 | 2-2 |
| 2A066_ | 8-49, 51, 53 |
| 2A1910-_ | 15-4 |
| 2ACLS-_R | 7-22 |
| 2BCLS-_R | 7-22 |
| 2CLE-_E | 7-3 |
| 2CLE-_M-C | 7-3 |
| 2CLE-_M-D | 7-3, 22 |
| 2CLE-_M-E | 7-3, 22 |
| 2CLS-_R | 7-22 |
| 2HCLS-_R | 7-22 |
| 2NCLPT-_ | 7-26 |
| 3.6ABCNA_ | 7-26 |
| 3.6ABWNA_ | 7-26 |
| 3.6ADLSJ | 7-32 |
| 3.6ADOSJ | 7-32 |
| 3.6CAV_ | 7-26 |
| 3.6WDFHO | 7-31 |
| 3.6WDLSJ | 7-31 |
| 3.6WDOH6 | 7-31 |
| 3.6WDOSJ | 7-32 |
| 3.6WFFHO | 7-31 |
| 3.6WFLSJ | 7-31 |
| 3.6WFOH6 | 7-31 |
| 3.6WFOSJ | 7-32 |
| 3.6WJON6 | 7-31 |
| 3.6WKFHO | 7-31 |
| 3.6WKLSJ | 7-32 |
| 32BS | 5-15 |
| 32LSCC | 5-15 |
| 36ABGNA_ | 7-26 |
| 36CAV_ | 7-26 |
| 36TDQSJ | 7-32 |
| 36TFQSJ | 7-32 |
| 36TXQEJ | 7-32 |
| 3723 | 8-14 |
| 3742 | 8-14 |
| 3743 | 8-14 |
| 3828-_ | 8-5 |
| 38CAV_E | 7-26 |
| 38CAVH_E | 7-26 |
| 38CLPT-_E | 7-26 |
| 38CLPT-_M-A | 7-29 |
| 38GFZSJ_E | 7-21 |
| 4164 | 2-4 |
| 4164-FR | 2-4 |
| 4393-_ | 8-5 |
| 4421 | 8-14 |
| 4515 | 8-14 |
| 4520-_ | 8-5 |
| 46KU_ | 7-33 |
| 46SBR_ | 7-33 |
| 46TB_ | 7-33 |
| 46XAD_ | 7-33 |
| 5.5ABWNA_E | 7-26 |
| 5.5AMWNA_E | 7-26 |
| 5.5CAV_E | 7-26 |
| 5.5CAVH_E | 7-26 |
| 5.5VFNHA | 7-31 |
| 5.5VKNHA | 7-31 |
| 51215 | 1-2 |
| 51235 | 1-2 |
| 5592-01 | 3-16 |
| 55GDMSJ_E | 7-21 |
| 55GFMSJ_E | 7-21 |
| 5674-_ | 3-16 |
| 5681-01 | 3-16 |
| 5682-_ | 3-16 |
| 5960-_ | 3-16 |
| 5ACLS-_R | 7-23 |
| 5ACLS-30 | 7-23 |
| 5AHLE-_E | 7-8 |
| 5BCLS-_R | 7-23 |
| 5BCLS-30 | 7-23 |
| 5BHCL-_E | 7-8 |
| 5BHLE-_E | 7-8 |
| 5CLE-_E | 7-5, 8 |
| 5CLE-_E-D | 7-5 |
| 5CLE-_M-C | 7-5 |
| 5CLE-_M-D | 7-5, 23 |
| 5CLE-_M-E | 7-5, 23 |
| 5CLPT-_E | 7-26 |
| 5CLPT-_M-A | 7-29 |
| 5CLS-_R | 7-23 |
| 5CLS-30 | 7-23 |
| 5HCL-_E | 7-8 |
| 5HCLS-_R | 7-23 |
| 5HCLS-30 | 7-23 |
| 5HLE-_E | 7-5 |


† Due to the many sizes, AC and DC voltage ratings, amp ratings and standards associated with the 170M high speed fuse catalog number prefix, please see the high speed fuse section table of contents to locate your specific fuse.

## Catalog number index

For information on products not contained in this catalog, contact Customer Satisfaction, toll-free, at 855-287-7626 (855-BUSSMANN) between 7:00 a.m. — 6:00 p.m. Central time, M-F, or email BussCustSat@Eaton.com.


| Catalog no. | Page |
|---|---|
| 5HLE-_M-C | 7-5 |
| 5HLE-_M-D | 7-5, 23 |
| 5HLE-_M-E | 7-5, 23 |
| 5LCLS-_R | 7-23 |
| 5MCLS-_R-_A | 7-23 |
| 5MCLS-_R-_B | 7-23 |
| 5NCLPT-_E | 7-26 |
| 5NCLPT-_E-A | 7-26 |
| 5TPH | 15-4 |
| 60/100BS | 5-15 |
| 63/100LSC | 5-15 |
| 64200 | 2-3 |
| 64300 | 2-3 |
| 68300 | 2-3 |
| 68600 | 2-3 |
| 7.2ABCNA_ | 7-26 |
| 7.2ABWNA_ | 7-26 |
| 7.2AMWNA_E | 7-26 |
| 7.2CAV_ | 7-26 |
| 7.2TDLSJ | 7-32 |
| 7.2TFLSJ | 7-32 |
| 7.2WFMSJ | 7-31 |
| 7.2WFNHO | 7-31 |
| 7.2WKMSJ | 7-31 |
| 7.2WKNHO | 7-31 |
| 70_-_A | 14-10 |
| 72_ | 14-10 |
| 72KU_ | 7-33 |
| 72SBR_ | 7-33 |
| 72TB_ | 7-33 |
| 72XAD_ | 7-33 |
| 7BCLS-_R | 7-25 |
| 8ACLS-_R | 7-25 |
| 8AHLE-_E | 7-13 |
| 8BHLE-_E | 7-13 |
| 8CLE-_E | 7-11 |
| 8CLE-_M-C | 7-11 |
| 8CLE-_M-D | 7-5, 23 |
| 8CLE-_M-E | 7-11 |
| 8CLPT-_E-A | 7-26 |
| 8CLPT-_M-A | 7-29 |
| 8CLPT-_M-B | 7-29 |
| 8CLS-_R | 7-25 |
| 8HCL-_E | 7-13 |
| 8HLE-_E | 7-11 |
| 8HLE-_M-C | 7-11 |
| 8HLE-_M-D | 7-5, 25 |
| 8HLE-_M-E | 7-11 |
| 8NCLPT-_E | 7-26 |
| 8NCLPT-_E-A | 7-26 |
| 8NCLPT-_E-B | 7-26 |
| 9078A67G04 | 7-3, 7, 11, 22, 23, 25, 36 |
| 9435-1/2 | 8-42 |
| 9732 | 8-42 |
| 9838 | 8-48 |
| 9841 | 8-48 |
| A | 2-11 |
| A3354710 | 7-3, 7, 11, 36 |
| A3354730 | 7-3, 7, 11, 22, 23, 25, 36 |
| A3354745 | 7-20, 36 |
| AAO-_ | 5-7 |
| ABC-_-R | 3-9 |
| ABC-V-_-R | 3-9 |
| AC-_ | 5-8 |
| AD-_ | 5-8 |
| AGA-_ | 3-7 |
| AGC-_-R | 3-9 |
| AGC-V-_-R | 3-9 |
| AGW-_ | 3-8 |
| AGX-_ | 3-8 |
| AL-D | 4-37 |
| ANL-_ | 2-4 |
| ANN-_ | 2-4 |
| AT512 | 10-4 |
| ATC-_ | 2-13 |
| ATC-FHID | 2-14 |
| ATM-_ | 2-12 |
| ATM-_LP | 2-12 |
| ATM-FHID | 2-14 |
| ATR-_ | 2-12 |
| B | 10-11, 13, 15 |
| B221-_ | 12-6 |
| B222-_ | 12-6 |
| BAC01 | 11-53, 62, 68, 70 |
| BAC02 | 11-53, 62, 68, 70 |
| BAC03 | 11-55, 57, 68 |
| BAC04 | 11-55, 57, 68 |
| BAC05 | 11-36, 38, 40, 42, 44, 47, 49, 66 |
| BAC06 | 11-36, 38, 40, 42, 44, 47, 49, 66 |
| BAC11 | 11-55, 57, 68 |
| BAC12 | 11-55, 57, 68 |
| BAC-HOLDER2 | 11-36 |
| BAF-_ | 2-5 |
| BAO-_ | 5-7 |
| BB1P100M_ | 8-10 |
| BB3P100M_ | 8-10 |
| BBS-_ | 2-7 |
| BC-_ | 5-8 |
| BCCMM603-3_ | 8-6 |
| BCM603-_ | 8-6 |
| BD-_ | 5-8 |
| BG301_ | 8-15 |
| BG302_ | 8-15 |
| BG303_ | 8-15 |
| BH-0_ | 4-14, 8-39 |
| BH-1_ | 4-14, 8-39 |
| BH-2_ | 4-14, 8-39 |
| BH-3-_ | 4-14, 8-39 |
| BK/1A4287 | 8-42 |
| BK/1A4806-2 | 8-42 |
| BK/9789-Y2 | 8-44 |
| BK/9987SA | 8-43 |
| BMM603-_ | 8-6 |
| BNQ21-_ | 10-8 |
| BOOT-KCM | 2-3 |
| BOOT-KDM | 2-3 |
| BPVM-_ | 6-9 |
| BQE | 10-8 |
| BQQ41-_ | 10-8 |
| BRKT-ANGL | 10-20 |
| BRKT-FLT | 10-20 |
| BRKT-ND | 10-20 |
| BRKT-NDSCRW | 10-20 |
| BRKT-NDSCRW2 | 10-20 |
| BRKT-NDSCRW3 | 10-20 |
| BS | 10-13, 15 |
| BSPA_ | 13-6 |
| BSPA-FLUSHPLT_ | 13-7 |
| BSPD_ | 13-10 |
| BSPD_DING_ | 13-28 |
| BSPD48RJ45 | 13-27 |
| BSPH2A_ _ _ _LVR | 13-25 |
| BSPM1A_ _ _ _LV(R) | 13-23 |
| BSPMA1_S2GR | 13-15 |
| BSPMA2_S3GR | 13-17 |
| BSPMA3_DLGR | 13-19 |
| BSPMA3_WYGR | 13-19 |
| BSPMA4_WYNGR | 13-21 |
| BVL50 | 6-5, 11, 8-40 |
| C10G_ | 5-13 |
| C10M_ | 5-14 |
| C14G_ | 5-13 |
| C14M_ | 5-14 |
| C22G_ | 5-13 |
| C22M_ | 5-14 |
| C30BS | 5-15 |
| C30F | 5-15 |
| C30FBS | 5-15 |
| C515-_-R | 3-2 |
| C517-3-R | 3-3 |
| C518-_-R | 3-2 |
| C519-_-R | 3-2 |
| C520-_-R | 3-2 |
| C5268-_ | 4-14, 8-39 |
| C60BS | 5-15 |
| C60F | 5-15 |
| C60FBS | 5-15 |
| C7021-_ | 10-9 |
| CCP2-_-100CF | 11-6, 25 |
| CCP2-_-30CC | 11-2, 17 |
| CCP2-_-30CF | 11-6, 21 |
| CCP2-_-30M | 11-2, 17 |
| CCP2-_-60CF | 11-6, 21 |
| CCP2-1-DCC | 11-2 |
| CCP2-1-DCM | 11-2 |
| CCP2-AUX | 11-16 |
| CCP2-AUX-100 | 11-16 |
| CCP2B-1-_CF | 11-29 |
| CCP2B-2-_CF | 11-29 |
| CCP2B-3-_CF | 11-29 |
| CCP2-H4X-_ | 11-12 |
| CCP2-MW1-3 | 11-13 |
| CCP2-MW1-6 | 11-13 |
| CCP2-PLC-100 | 11-14 |
| CCP2-PLC-IND | 11-14 |
| CCP2R-_-100CF | 11-6, 26 |
| CCP2R-_-30CC | 11-2, 18 |
| CCP2R-_-30CF | 11-6, 22 |
| CCP2R-_-30M | 11-2, 18 |
| CCP2R-_-60CF | 11-6, 22 |
| CCP2RL-_-100CF | 11-6, 26 |
| CCP2RL-_-30CC | 11-2, 18 |
| CCP2RL-_-30CF | 11-6, 22 |
| CCP2RL-_-30M | 11-2, 18 |
| CCP2RL-_-60CF | 11-6, 22 |
| CCP2S-_-100CF | 11-6, 26 |
| CCP2S-_-30CC | 11-2, 18 |
| CCP2S-_-30CF | 11-6, 22 |
| CCP2S-_-30M | 11-2, 18 |
| CCP2S-_-60CF | 11-6, 22 |
| CCP2-SH1-_ | 11-12 |
| CCP2SL-_-100CF | 11-6, 28 |
| CCP2SL-_-30CC | 11-2, 20 |
| CCP2SL-_-30CF | 11-6, 24 |
| CCP2SL-_-30M | 11-2, 20 |
| CCP2SL-_-60CF | 11-6, 24 |
| CCP2-TS1-3 | 11-13, 17, 19, 20, 21, 23, 24 |
| CCP2-TS1-6 | 11-13, 25, 26, 28 |
| CCPLP-_-20G-_ | 11-32 |
| CCPLP-_-30CC-_ | 11-32 |
| CCPLP-_-30M-_ | 11-32 |
| CD-_ | 5-8 |
| CDN-_ | 5-2 |
| CDS-_ | 5-2 |
| CEO-_ | 5-7 |
| CFP-_ | 15-3 |
| CGL-_ | 5-3 |
| CH_J_ | 8-28 |
| CH14_ | 8-16 |
| CH14_DIU | 4-37 |
| CH14_DMSU-F | 4-37 |
| CH14_DNIU | 4-37 |
| CH14_DNU | 4-37 |
| CH14_DU | 4-37 |
| CH14-_PS | 8-16 |
| CH141DNXU | 4-37 |
| CH143DNMSU-F | 4-37 |
| CH14-CTP | 8-16 |
| CH14-IP20 | 4-37 |
| CH14-L | 4-37 |
| CH14-MS1 | 4-37 |
| CH14-MS3 | 4-37 |
| CH14-P | 4-37 |
| CH22_ | 8-17 |
| CH22_DIU | 4-37 |
| CH22_DMSU-F | 4-37 |
| CH22_DNIU | 4-37 |
| CH22_DNU | 4-37 |
| CH22_DU | 4-37 |
| CH22-_PS | 8-17 |
| CH221DNXU | 4-37 |
| CH223DNMSU-F | 4-37 |
| CH22-CTP | 8-17 |
| CH22-IP20 | 4-37 |
| CH22-L | 4-37 |
| CH22-MS1 | 4-37 |
| CH22-MS3 | 4-37 |
| CHCC_D_U | 8-8 |
| CHCC1DI-48U | 8-8 |
| CHM_D_U | 8-8 |
| CHM_DIU | 4-36 |
| CHM_DN_U | 8-8 |
| CHM_DNU | 4-36 |
| CHM_DU | 4-36 |
| CHM1DNXU | 4-36 |
| CH-PLC2 | 8-11 |
| CHPV_U | 6-8, 8-8 |
| CHPV14_ | 8-16 |

## Catalog number index

For information on products not contained in this catalog, contact Customer Satisfaction, toll-free, at 855-287-7626 (855-BUSSMANN) between 7:00 a.m. — 6:00 p.m. Central time, M-F, or email BussCustSat@Eaton.com.


| Catalog no. | Page |
|---|---|
| CHPV15L85 | 6-10 |
| CHSF-_ | 4-3 |
| CL1 | 4-21 |
| CLE-_-C | 7-3, 5, 11, 15 |
| CLE-_-D | 7-3, 5, 11, 15 |
| CLE-_-E | 7-3, 5, 11, 15 |
| CLPT-_E-B | 7-26 |
| CLPT-_L | 7-29 |
| CM_CF | 5-15 |
| CPB160-_ | 9-9 |
| CPB162-_ | 9-6, 9, 13 |
| CPDB-_ | 9-6, 9, 13 |
| CPDB165 | 9-9, 13 |
| CVR_-CCM | 8-6 |
| CVR_-CCM-QC | 8-6 |
| CVR_-J-60030 | 8-32 |
| CVR_-J-60060 | 8-18, 32, 34 |
| CVR_-J-60100-M | 8-32, 34 |
| CVR_-J-60200-M | 8-32, 34 |
| CVR_-J-60400-M | 8-32, 34 |
| CVR_-J-60600-M | 8-32 |
| CVR_-RH-25030 | 8-19 |
| CVR_-RH-25060 | 8-19, 25, 27 |
| CVR_-RH-25100 | 8-20, 23 |
| CVR_-RH-25200 | 8-20, 23 |
| CVR_-RH-25400 | 8-20, 23 |
| CVR_-RH-25600 | 8-20, 23 |
| CVR_-RH-60030 | 8-19, 22 |
| CVR_-RH-60060 | 8-19, 22, 25, 27 |
| CVR_-RH-60100 | 8-20, 23 |
| CVR_-RH-60200 | 8-20, 23 |
| CVR_-RH-60400 | 8-20, 23 |
| CVR_-RH-60600 | 8-20, 23 |
| CVR-CCM | 6-9, 8-6 |
| CVRI-CCM | 6-9, 8-6 |
| DD-_ | 5-8 |
| DD1-J | 10-16 |
| DD2HB-J | 10-16 |
| DD2-J | 10-16 |
| DD3-J | 10-16 |
| DEO-_ | 5-7 |
| DFJ-_ | 4-4 |
| DIR-01 | 11-61 |
| DIR-02_ | 11-53 |
| DIR-03_ | 11-55 |
| DIR-04 | 11-57 |
| DIR-05 | 11-36 |
| DIR-06 | 11-36 |
| DIR-07 | 11-38, 40, 42, 44, 46 |
| DIR-08 | 11-49 |
| DOOR-508 | 11-61 |
| DRA-1 | 15-4 |
| DRL35MM_ | 10-20 |
| EC-250 | 4-21 |
| EC-600 | 4-21 |
| ECAP1P | 8-10 |
| ED-_ | 5-8 |
| EF-_ | 5-8 |
| EFS-_ | 5-8 |
| ER_-100J3PB | 11-65 |
| ER_-100N3PB | 11-67 |
| ER_-1200N3PB | 11-67 |
| ER_-16N3PB | 11-69 |
| ER_-16N6SB | 11-69 |
| ER_-200J3PB | 11-65 |
| ER_-200N3PB | 11-67 |
| ER_-25N3PB | 11-69 |
| ER_-25N6SB | 11-69 |
| ER_-30J3PB | 11-65 |
| ER_-30N3PB | 11-67 |
| ER_-400J3PB | 11-65 |
| ER_-400N3PB | 11-67 |
| ER_-40N3PB | 11-69 |
| ER_-40N6SB | 11-69 |
| ER_-600J3PB | 11-65 |
| ER_-600N3PB | 11-67 |
| ER_-60J3PB | 11-65 |
| ER_-60N3PB | 11-67 |
| ER_-63N3PB | 11-69 |
| ER_-63N6SB | 11-69 |
| ER_-800L3PB | 11-65 |
| ER_-800N3PB | 11-67 |
| ER_-80N3PB | 11-69 |
| ER_-80N6SB | 11-69 |
| ESD-_ | 5-7 |
| FBI | 3-13 |
| FBM | 3-13 |
| FCF_RN | 1-9 |
| FEH | 5-12, 6-11, 8-40 |
| FEH1500 | 6-10 |
| FF-_ | 5-8 |
| FG-_ | 5-8 |
| FL11H_ | 7-34 |
| FL11K_ | 7-34 |
| FL11T_ | 7-34 |
| FL12K_ | 7-34 |
| FL3K_ | 7-34 |
| FL3T_ | 7-34 |
| FLC_ | 11-38, 40, 42, 44, 46 |
| FLCM | 11-38, 40, 42, 44, 46 |
| FLH1 | 11-38, 40, 42, 44, 46 |
| FLH2 | 11-38, 40, 42, 44, 46 |
| FLRM | 11-38, 40, 42, 44, 46 |
| FNA-_ | 2-9 |
| FNM-_ | 2-6 |
| FNQ-_ | 2-7 |
| FNQ-R-_ | 1-6 |
| FP-_ | 15-3 |
| FRN-R-_ | 1-23 |
| FRS-R-_ | 1-23 |
| FSCVR | 8-10 |
| FT-_ | 15-3 |
| FWA-_A | 4-6 |
| FWA-_A10F | 4-22 |
| FWA-_A21F | 4-22 |
| FWA-_AH | 4-5 |
| FWA-_B | 4-6 |
| FWC-_A10F | 4-26 |
| FWH-_A | 4-8 |
| FWH-_A14F | 4-25 |
| FWH-_A6F | 4-24 |
| FWH-_B | 4-8 |
| FWH5-_A6F | 4-24 |
| FWJ-_A | 4-13 |
| FWJ-_A14F | 4-33 |
| FWK-_20F | 4-32 |
| FWK-_A25F | 4-32 |
| FWL-_A20F | 4-34 |
| FWL-_A20FI | 4-34 |
| FWP-_A | 4-11 |
| FWP-_A14F | 4-28 |
| FWP-_A14FI | 4-28 |
| FWP-_A22F | 4-30 |
| FWP-_A22FI | 4-30 |
| FWP-_B | 4-11 |
| FWP-_G10F | 4-27 |
| FWP-_G14F | 4-29 |
| FWP-_G14FI | 4-29 |
| FWP-_G22F | 4-31 |
| FWP-_G22FI | 4-31 |
| FWS-_A20F | 4-35 |
| FWS-_A20FI | 4-35 |
| FWX-__AH | 4-7 |
| FWX-_A | 4-7 |
| FWX-_A14F | 4-23 |
| G30060-_ | 8-15 |
| GBA-_ | 2-8 |
| GBB-_-R | 3-10 |
| GBB-V-_-R | 3-10 |
| GDA-_ | 3-4 |
| GDB-_ | 3-3 |
| GDC-_ | 3-5 |
| GF-_ | 5-8 |
| GG-_ | 5-8 |
| GH-_ | 5-8 |
| GLD-_ | 2-8 |
| GLP | 5-15 |
| GLQ-_ | 2-10 |
| GLR-_ | 2-11 |
| GMA-_-R | 3-6 |
| GMA-V-_-R | 3-6 |
| GMC-_-R | 3-6 |
| GMC-V-_-R | 3-6 |
| GMD-_-R | 3-7 |
| GMD-V-_-R | 3-7 |
| GMF-_ | 2-11 |
| GMQ-_ | 2-10 |
| GMT-_A | 14-11 |
| GMT-A | 14-11 |
| GND-_-_ | 11-62 |
| GRF-_ | 2-11 |
| H12-03_ | 11-42, 44, 46, 55 |
| H12-05_ | 11-36, 38, 40 |
| H15-H-1 | 3-12 |
| H15-V-1 | 3-12 |
| H4X-01_ | 11-53, 61 |
| H4X-02_ | 11-61 |
| H4X-03_ | 11-53, 61 |
| H4X-04_ | 11-36 |
| H4X-05_ | 11-36, 38, 40 |
| H4X-06_ | 11-42, 44, 46, 55 |
| H4X-07_ | 11-49, 57 |
| H79-1 | 11-36 |
| H79-2 | 11-38, 40, 42, 44, 46, 47 |
| H79-3 | 11-46, 47 |
| H79-4 | 11-49 |
| HBH-I | 3-13 |
| HBH-M | 3-13 |
| HBV-I | 3-13 |
| HBV-M | 3-13 |
| HBW-I | 3-13 |
| HBW-M | 3-13 |
| HCL-NL-1 | 7-8, 13, 18 |
| HEB-_ | 8-51 |
| HEC-_ | 8-49 |
| HEG-_ | 8-49 |
| HEH-_ | 8-49 |
| HEJ-_ | 8-49 |
| HET | 8-49, 51, 53 |
| HEX-_ | 8-53 |
| HEY-_ | 8-53 |
| HEZ-_ | 8-52 |
| HFA-_ | 8-46 |
| HFB-_ | 8-47 |
| HH_ | 8-48 |
| HH2 | 2-14 |
| HHB-_ | 8-47 |
| HHC | 2-14 |
| HHD | 2-14 |
| HHF | 2-14 |
| HHG | 2-14 |
| HHL | 2-14 |
| HHM | 2-14 |
| HHR | 2-14 |
| HHS | 2-14 |
| HHT | 8-46 |
| HHU | 2-14 |
| HHV | 2-14 |
| HHX | 2-14 |
| HJL | 8-42 |
| HK_ | 8-42 |
| HKP-_ | 8-42 |
| HLD-_ | 8-43 |
| HLQ-_ | 2-10 |
| HLR | 2-11 |
| HLR-2A | 2-11 |
| HLS_ | 14-11 |
| HLT_ | 14-11 |
| HM_ | 8-48 |
| HM25030-_ | 8-19 |
| HM25060-_ | 8-19 |
| HM25060-_MW_ | 8-25 |
| HM25100-_ | 8-20 |
| HM25200-_ | 8-20 |
| HM25400-_ | 8-20 |
| HM25600-_ | 8-20 |
| HM60030-_ | 8-19 |
| HM60060-_ | 8-19 |
| HM60060-_MW_ | 8-25 |
| HM60100-_ | 8-20 |
| HM60200-_ | 8-20 |
| HM60400-_ | 8-20 |
| HM60600-_ | 8-20 |
| HPC-D | 8-43 |
| HPD | 8-44 |
| HPF-_ | 8-43 |
| HPG-_ | 8-44 |
| HPM-_ | 8-44 |
| HPS-_ | 8-45 |
| HPS2 | 8-45 |

## Catalog number index

For information on products not contained in this catalog, contact Customer Satisfaction, toll-free, at 855-287-7626 (855-BUSSMANN) between 7:00 a.m. — 6:00 p.m. Central time, M-F, or email BussCustSat@Eaton.com.


| Catalog no. | Page |
|---|---|
| HPV-D15V-4A | 6-4 |
| HPV-DV-_A | 6-4 |
| HR_ | 8-48 |
| HR60060-_MW_ | 8-27 |
| HRK-R | 8-48 |
| HTB-_- | 8-41 |
| HTC-140M | 3-14 |
| HTC-150M | 3-14 |
| HTC-15M | 3-14 |
| HTC-200M | 3-14 |
| HTC-210M | 3-14 |
| HTC-60M | 3-12 |
| HVA_ | 7-30 |
| HVB_ | 7-30 |
| HVJ_ | 7-30 |
| HVL_ | 7-30 |
| HVR | 7-30 |
| HVT_ | 7-30 |
| HVU_ | 7-30 |
| HVW_ | 7-30 |
| HVX_ | 7-30 |
| J101 | 10-11 |
| J-13 | 15-2 |
| J15188 | 10-6 |
| J-16 | 15-2 |
| J201 | 10-13 |
| J-21 | 15-2 |
| J-26 | 15-2 |
| J301 | 10-15 |
| J-41 | 15-2 |
| J-42 | 15-2 |
| J-62 | 15-2 |
| J-63 | 15-2 |
| J-64 | 15-2 |
| JCH-_R | 7-22 |
| JCK-_R | 7-22 |
| JCK-A-_R | 7-22 |
| JCK-B-_R | 7-22 |
| JCL-_R | 7-23 |
| JCL-A-_R | 7-23 |
| JCL-B-_R | 7-23 |
| JCW-_ | 7-26 |
| JCX-_E | 7-3 |
| JCY-_E | 7-5 |
| JF1 | 8-11 |
| JJN-_ | 1-25 |
| JJS-_ | 1-25 |
| JKS-_ | 1-14 |
| JKS-_-700 | 5-11 |
| JM60030-_ | 8-32 |
| JM60030-_MW_ | 8-34 |
| JM60060-_ | 8-32 |
| JM60060-_MW_ | 8-34 |
| JM60100-_ | 8-32 |
| JM60100-_MW_ | 8-34 |
| JM60200-_ | 8-32 |
| JM60200-_MW_ | 8-34 |
| JM60400-_ | 8-32 |
| JM60400-_MW_ | 8-34 |
| JM60600-_ | 8-32 |
| JM70100-_ | 8-18 |
| JM70100-_CR | 4-36 |
| JM70100-_MW14 | 8-18 |
| JN1 | 10-2, 3, 6 |
| JN2 | 10-4 |
| JN3 | 10-4, 6, 7 |
| JN4 | 10-2, 7 |
| JN512 | 10-4 |
| JNDN3 | 10-2 |
| JNSE3 | 10-5 |
| JNSS3 | 10-5 |
| JP60030-3_ | 8-30 |
| JT60030 | 8-29 |
| JT60060 | 8-29 |
| JTN60030 | 8-29 |
| JTN60060 | 8-29 |
| JU12 | 10-19 |
| JV-L | 8-16, 17 |
| KAC-_ | 4-9 |
| KAD | 10-7 |
| KAZ | 2-9 |
| KBC-_ | 4-10 |
| KCA | 2-3 |
| KCB | 2-3 |
| KCC | 2-3 |
| KCD | 2-3 |
| KCE | 2-3 |
| KCF | 2-3 |
| KCH | 2-3 |
| KCJ | 2-3 |
| KCM | 2-3 |
| KCR | 2-3 |
| KCS | 2-3 |
| KCV | 2-3 |
| KCY | 2-3 |
| KCZ | 2-3 |
| KDA | 2-3 |
| KDB | 2-3 |
| KDC | 2-3 |
| KDD | 2-3 |
| KDE | 2-3 |
| KDF | 2-3 |
| KDH | 2-3 |
| KDJ | 2-3 |
| KDM | 2-3 |
| KDP | 2-3 |
| KDR | 2-3 |
| KDT | 2-3 |
| KDU | 2-3 |
| KDY | 2-3 |
| KEW | 2-3 |
| KEX | 2-3 |
| KFH-A | 2-3 |
| KFM | 2-3 |
| KFT | 2-3 |
| KFZ | 2-3 |
| KIG | 2-3 |
| KIT-6POLE | 11-62 |
| KLM-_ | 2-6 |
| KLU-_ | 1-18 |
| KPF | 2-3 |
| KQO | 2-3 |
| KQT | 2-3 |
| KQV | 2-3 |
| KRP-C_SP | 1-16 |
| KRP-CL-_ | 1-17 |
| KT_ | 10-7 |
| KTK-_ | 2-5 |
| KTK-R-_ | 1-7 |
| KTN-R-_ | 1-21 |
| KTS-R-_ | 1-21 |
| KTU-_ | 1-17 |
| KU_ | 10-19 |
| LP-CC-_ | 1-5 |
| LPJ-_ | 1-13 |
| LPN-RK_ | 1-18 |
| LPS-RK_ | 1-18 |
| LUG1-_ | 11-46, 55 |
| LUG2-_ | 11-46, 55 |
| LUG3-_ | 11-55 |
| LUG5-_ | 11-49, 57 |
| LUG6-_ | 11-57 |
| MAI | 4-21 |
| MAX-_ | 2-13 |
| MAX-FHID | 2-14 |
| MB-_ | 1-29 |
| MBI | 4-21 |
| MC-250 | 4-21 |
| MC-600 | 4-21 |
| MDA-_-R | 3-11 |
| MDA-V-_-R | 3-11 |
| MDL-_-R | 3-10 |
| MDL-V-_-R | 3-10 |
| MDQ–R | 3-11 |
| MDQ-V-_-R | 3-11 |
| MIC-_ | 2-8 |
| MIS-_ | 2-9 |
| MT12-1-2 | 10-2, 3, 4, 5, 6, 7 |
| MTC6 | 10-2, 7 |
| MTMU_ | 10-19 |
| MV055F_ | 7-5 |
| MV155F_ | 7-15 |
| N512-_ | 10-4 |
| NC3-_ | 10-5 |
| NDN_ | 10-2, 3 |
| NDNF1-WH | 8-11 |
| NFT_ | 10-4 |
| NFTA | 10-20 |
| NITD-_ | 5-7 |
| NNB | 15-3 |
| NNB-R | 15-3 |
| NNC | 15-3 |
| NO.1 | 15-4 |
| NO.2 | 15-4 |
| NO.213 | 15-2 |
| NO.213-R | 15-2 |
| NO.216 | 15-2 |
| NO.216-R | 15-2 |
| NO.226 | 15-2 |
| NO.226-R | 15-2 |
| NO.242-R | 15-2 |
| NO.2621 | 15-2 |
| NO.2621-R | 15-2 |
| NO.263 | 15-2 |
| NO.263-R | 15-2 |
| NO.2641 | 15-2 |
| NO.2641-R | 15-2 |
| NO.2642 | 15-2 |
| NO.2661 | 15-2 |
| NO.2661-R | 15-2 |
| NO.2662 | 15-2 |
| NO.2662-R | 15-2 |
| NO.2664 | 15-2 |
| NO.2664-R | 15-2 |
| NO.4 | 15-4 |
| NO.5 | 15-4 |
| NO.6 | 15-4 |
| NO.616 | 15-2 |
| NO.616-R | 15-2 |
| NO.626 | 15-2 |
| NO.626-R | 15-2 |
| NO.642-R | 15-2 |
| NO.663 | 15-2 |
| NO.663-R | 15-2 |
| NO.7 | 15-4 |
| NO.8 | 15-4 |
| NON-_ | 1-15 |
| NOS-_ | 1-15 |
| NRA | 10-20 |
| NSD-_ | 5-7 |
| NSE3-_ | 10-5 |
| NSS3-_ | 10-5 |
| NTN-R-_ | 15-3 |
| NTRL-_-_ | 11-62 |
| NTS-R-_ | 15-3 |
| NUC | 10-19 |
| NUE | 10-19 |
| NUM_ | 10-19 |
| OJ_ | 10-11, 13, 15, 18 |
| OPM-1038_ | 8-12 |
| OPM-NG-S_ | 8-13 |
| OSD-_ | 5-7 |
| P | 10-13 |
| P-_ | 1-28 |
| PCT | 14-11 |
| PDB_ | 9-6 |
| PDBFS_ | 9-3 |
| PF1-_ | 8-11, 15 |
| PLU_ | 10-6 |
| PMP-_ | 12-5 |
| POLE-_ | 11-62, 70 |
| POLE98-_ | 11-53 |
| PON-_ | 5-2 |
| PS_ | 12-5 |
| PSU1-_ | 10-7 |
| PTFB-2500-JCD | 7-26 |
| PV-_A-01XL | 6-7 |
| PV-_A-01XL-15 | 6-7 |
| PV-_A-01XL-B | 6-7 |
| PV-_A-01XL-B-15 | 6-7 |
| PV-_A10F85L | 6-6 |
| PV-_A14F | 6-4 |
| PV-_A-1XL | 6-7 |
| PV-_A-1XL-15 | 6-7 |
| PV-_A-1XL-B | 6-7 |
| PV-_A-1XL-B-15 | 6-7 |
| PV-_A-2XL | 6-7 |
| PV-_A-2XL-15 | 6-7 |
| PV-_A-2XL-B | 6-7 |
| PV-_A-2XL-B-15 | 6-7 |

## Catalog number index

For information on products not contained in this catalog, contact Customer Satisfaction, toll-free, at 855-287-7626 (855-BUSSMANN) between 7:00 a.m. — 6:00 p.m. Central time, M-F, or email BussCustSat@Eaton.com.


| Catalog no. | Page |
|---|---|
| PV-_A-3L | 6-7 |
| PV-_A-3L-15 | 6-7 |
| PV-_A-3L-B | 6-7 |
| PV-_A-3L-B-15 | 6-7 |
| PV-_ANH1 | 6-5 |
| PV-_ANH1-B | 6-5 |
| PV-_ANH2 | 6-5 |
| PV-_ANH2-B | 6-5 |
| PV-_ANH3 | 6-5 |
| PV-_ANH3-B | 6-5 |
| PV15M-4A-CT | 6-6 |
| PV-1A10-1P | 6-3 |
| PV-1A10-2P | 6-3 |
| PV-1A10F | 6-3 |
| PV-1A10F-CT | 6-3 |
| PV-1A10-T | 6-3 |
| PVM-_ | 6-2 |
| PVS-R-_ | 6-2 |
| PWR1PLP | 8-10 |
| PWR35MM | 8-10 |
| PWR50MM | 8-10 |
| QC_ | 10-11, 13, 15 |
| QC_-J | 10-11, 13, 15 |
| QSCP | 12-2 |
| RD1000-3 | 11-51, 52, 57 |
| RD1000-4 | 11-51, 52, 57 |
| RD100-3 | 11-51, 52, 53 |
| RD100-3-SCCR | 11-51, 52, 55 |
| RD1200-3 | 11-51, 52, 57 |
| RD1200-4 | 11-51, 52, 57 |
| RD16-3-508 | 11-59, 60, 61 |
| RD200-3 | 11-51, 52, 55 |
| RD200-4 | 11-51, 52, 55 |
| RD25-3-508 | 11-59, 60, 61 |
| RD30-3 | 11-51, 52, 53 |
| RD400-3 | 11-51, 52, 55 |
| RD400-4 | 11-51, 52, 55 |
| RD40-3-508 | 11-59, 60, 61 |
| RD600-3 | 11-51, 52, 57 |
| RD600-4 | 11-51, 52, 57 |
| RD60-3 | 11-51, 52, 53 |
| RD63-3-508 | 11-59, 60, 61 |
| RD800-3 | 11-51, 52, 57 |
| RD800-4 | 11-51, 52, 57 |
| RD80-3-508 | 11-59, 60, 61 |
| RDF100J-2 | 11-35, 44 |
| RDF100J-3 | 11-35, 44 |
| RDF100J-4 | 11-35, 44 |
| RDF200J-2 | 11-35, 46 |
| RDF200J-3 | 11-35, 46 |
| RDF200J-4 | 11-35, 46 |
| RDF30CC-3 | 11-35, 36 |
| RDF30CC-3N | 11-35, 36 |
| RDF30J-2 | 11-35, 38 |
| RDF30J-3 | 11-35, 38 |
| RDF30J-3-COMP | 11-35, 36 |
| RDF30J-3N-COMP | 11-35, 36 |
| RDF30J-4 | 11-35, 38 |
| RDF400J-2 | 11-35, 46 |
| RDF400J-3 | 11-35, 46 |
| RDF400J-4 | 11-35, 46 |
| RDF600J-2 | 11-35, 49 |
| RDF600J-3 | 11-35, 49 |
| RDF600J-4 | 11-35, 49 |
| RDF60J-2 | 11-35, 42 |
| RDF60J-2-COMP | 11-35, 40 |
| RDF60J-3 | 11-35, 42 |
| RDF60J-3-COMP | 11-35, 40 |
| RDF60J-4 | 11-35, 42 |
| RDF60J-4-COMP | 11-35, 40 |
| RDF800L-2 | 11-35, 49 |
| RDF800L-3 | 11-35, 49 |
| RDF800L-4 | 11-35, 49 |
| RM25030-_ | 8-22 |
| RM25060-_ | 8-22 |
| RM25060-_MW_ | 8-27 |
| RM25100-_ | 8-23 |
| RM25200-_ | 8-23 |
| RM25400-_ | 8-23 |
| RM25600-_ | 8-23 |
| RM60030-_ | 8-22 |
| RM60060-_ | 8-22 |
| RM60100-_ | 8-23 |
| RM60200-_ | 8-23 |
| RM60400-_ | 8-23 |
| RM60600-_ | 8-23 |
| RS_ | 5-15 |
| S-_ | 1-28 |
| S500-_-R | 3-3 |
| S500-V-_-R | 3-3 |
| S501-_-R | 3-4 |
| S501-V-_-R | 3-4 |
| S505-_-R | 3-4 |
| S505H-_-R | 3-5 |
| S505H-V-_-R | 3-5 |
| S505SCH-_-R | 3-5 |
| S506-_-R | 3-5 |
| S505SC-_-R | 3-4 |
| S506-V-_-R | 3-5 |
| S-8001-_ | 8-4 |
| S-8002-_ | 8-4 |
| S-8101-_ | 8-4 |
| S-8102-_ | 8-4 |
| S-8201-_ | 8-4 |
| S-8202-_ | 8-4 |
| S-8203-_ | 8-4 |
| S-8301-_ | 8-4 |
| SA-_ | 1-29 |
| SAMI-_ | 15-2 |
| SB1XL-S | 6-10 |
| SB2XL-S | 6-10 |
| SB3L-S | 6-10 |
| SC-_ | 1-12 |
| SCY | 1-30 |
| SD_-PB | 6-11 |
| SD_-SK | 6-11 |
| SD00-D | 5-12, 8-40 |
| SD00-PB | 5-12, 8-40 |
| SD00-SK | 5-12 |
| SD12-PB | 5-12, 8-40 |
| SD12-SK | 5-12, 8-40 |
| SD1-D | 5-12, 8-40 |
| SD1-D-PV | 6-11 |
| SD2-D | 5-12, 8-40 |
| SD2-D-PV | 6-11 |
| SD3-D | 5-12, 8-40 |
| SD3-D-PV | 6-11 |
| SD3-PB | 5-12, 8-40 |
| SD3-SK | 5-12, 8-40 |
| SD4-D | 8-40 |
| SD4-S | 5-12 |
| SD4-S1600 | 8-40 |
| SDL-_ | 5-12, 6-11, 8-40 |
| SFC-_ | 15-4 |
| SH1-_ | 11-36 |
| SH2-_ | 11-36 |
| SH3-_ | 11-53, 61 |
| SH4-_ | 11-53, 61 |
| SH5-_ | 11-38, 40, 42, 44, 46, 55 |
| SH6-_ | 11-57 |
| SH7-_ | 11-49 |
| SH-GUIDE_ | 11-53, 55, 57, 61 |
| SL-_ | 1-27 |
| SOU | 1-30 |
| SOW | 1-30 |
| SOX | 1-30 |
| SOY | 1-30 |
| SOY-B | 1-30 |
| SP | 10-11, 13, 15 |
| SPP40SP_ | 13-4 |
| SRU | 1-30 |
| SRW | 1-30 |
| SRX | 1-30 |
| SRY | 1-30 |
| SS | 10-13 |
| SSD-_ | 5-7 |
| SSN | 1-30 |
| SSU | 1-30 |
| SSW | 1-30 |
| SSY | 1-30 |
| SSY-RL | 1-30 |
| ST | 10-13, 15 |
| STD-_ | 5-7 |
| STY | 1-30 |
| T-_ | 1-28 |
| T30030-_ | 8-35 |
| T30060-_ | 8-35 |
| T30100-_ | 8-35 |
| T30200-_ | 8-35 |
| T30400-_ | 8-35 |
| T30600-_ | 8-35 |
| T60030-_ | 8-37 |
| T60060-_ | 8-37 |
| T60100-_ | 8-37 |
| T60200-_ | 8-37 |
| T60400-_ | 8-37 |
| T60600-_ | 8-37 |
| TB100-_ | 10-10 |
| TB200-_ | 10-12 |
| TB300-_ | 10-14 |
| TB345-_ | 10-14 |
| TB400 | 10-18 |
| TC-_ | 1-28 |
| TCF_ | 1-8 |
| TCFH_ | 1-11 |
| TD00-D | 5-12, 8-40 |
| TD00-IP20 | 5-12 |
| TD1-D | 5-12, 8-40 |
| TD1-D-PV | 6-11 |
| TD1-IP20 | 5-12 |
| TD2-D | 5-12, 8-40 |
| TD2-D-PV | 6-11 |
| TD2-IP20 | 5-12 |
| TD3-D | 5-12, 8-40 |
| TD3-D-PV | 6-11 |
| TD3-IP20 | 5-12 |
| TI_ | 4-21 |
| TL-_ | 1-27 |
| TP158HC_ | 14-6 |
| TP15900-_ | 14-4 |
| TP15914_ | 14-4 |
| TPA-_ | 14-5 |
| TPA-B-_ | 14-5 |
| TPC-_ | 14-2 |
| TPCDS-_ | 14-2 |
| TPCDS-D-_ | 14-2 |
| TPHCS_-_ | 14-7 |
| TPL-_ | 14-8 |
| TPM-_ | 14-3 |
| TPMDS-_ | 14.3 |
| TPN-_ | 14-9 |
| TPS-_ | 14-6 |
| TPS-_L | 14-6 |
| TPS-_V | 14-6 |
| TPSFH-_ | 15-4 |
| TSH1-_ | 11-62, 70 |
| TSH10-_ | 11-49, 66 |
| TSH2-_ | 11-70 |
| TSH3-_ | 11-53, 68 |
| TSH4-_ | 11-55, 68 |
| TSH5-_ | 11-55, 68 |
| TSH6-_ | 11-57, 68 |
| TSH7-_ | 11-57, 68 |
| TSH8-_ | 11-47, 66 |
| TSH9-_ | 11-47, 66 |
| UHA | 2-3 |
| UHJ-M | 2-3 |
| UHJ-T | 2-3 |
| UHJ-W | 2-3 |
| W-_ | 1-27 |
| WCF_RN | 1-10 |
| X_ | 10-16, 17 |

## Low-Peak™ Upgrade program and fuse inventory consolidation

The Low-Peak Upgrade program offers superior performance while reducing the number of SKUs that need to be in stock. Bussmann series Low-Peak fuses feature a high degree of current limitation to help provide the superior component protection and help mitigate arc flash hazard.

Listed below are fuse upgrades by branch circuit class.

The left column contains catalog symbols for Bussmann series and competitor products.

The right column contains the Low-Peak upgrade for consolidating and simplifying inventory.

To find out more about the advantages offered by the Low-Peak Upgrade program, visit Eaton.com/bussmannseries.

This is only a consolidated cross reference of the most common fuses. For a more extensive cross reference for fuses, please visit Eaton.com/bussmannseries/FuseFinder.

### 250 Volt Class R/H(K)

| Fuse symbol | Low-Peak upgrade |
|---|---|
| A2D | **LPN-RK_SP** |
| A2D-R | |
| A2K | |
| A2K-R | |
| A2Y (Type 1) | |
| AT-DE | |
| CHG | |
| CRN-R (Type 3) | |
| CTN-R | |
| DEN | |
| DLN | |
| DLN-R† | |
| ECN | |
| ECN-R | |
| ERN | |
| FLN | |
| FLN-R | |
| FRN | |
| FRN-R | |
| FTN-R | |
| GDN | |
| HAC-R | |
| HB | |
| KLN-R | |
| KON | |
| KTN-R | |
| LENRK | |
| LKN | |
| LLN-RK | |
| LON-RK | |
| NCLR | |
| NLN | |
| NON | |
| NRN | |
| OTN | |
| REN†† | |
| RFN | |
| RHN | |
| RLN | |
| TR | |
| 655 | |
| 660 | |
| 10KOTN | |
| 50KOTN | **LPN-RK_SP** |

† Obsolete, must be replaced with a another electrically equivalent fuse.
††70 to 600 amp versions obsoleted. Must be replaced with a another electrically equivalent fuse.

### 600 Volt Class R/H(K)

| Fuse symbol | Low-Peak upgrade |
|---|---|
| A6D | **LPS-RK_SP** |
| A6K-R | |
| A6X (Type 1) | |
| ATS-DE | |
| CHR | |
| CTS-R | |
| DES | |
| DES-R | |
| DLS | |
| DLS-R† | |
| ECS-R | |
| ERS | |
| FLS | |
| FLS-R | |
| FRS | |
| FRS-R | |
| FTS-R | |
| GDS | |
| HA | |
| KLS-R | |
| KOS | |
| KTS-R | |
| LES | |
| LES-R | |
| LES-RK | |
| LKS | |
| LLS-RK | |
| LOS-RK | |
| NLS | |
| NOS | |
| NRS | |
| OTS | |
| RES†† | |
| RFS | |
| RHS | |
| RLS | |
| SCLR | |
| TRS | |
| TRS-R | |
| 656 | |
| 10KOTS | |
| 50KOTS | **LPS-RK_SP** |

† Obsolete, must be replaced with a another electrically equivalent fuse.
††70 to 600 amp versions obsoleted. Must be replaced with a another electrically equivalent fuse.

### Class CC and Midget

| Fuse symbol | Low-Peak upgrade |
|---|---|
| A6Y (Type 2B) | **LP-CC** |
| ABU | |
| AGU | |
| ATDR | |
| ATM | |
| ATMR | |
| ATQ | |
| BAF | |
| BAN | |
| BLF | |
| BLN | |
| CCMR | |
| CM | |
| CMF | |
| CNM | |
| CNQ | |
| CTK | |
| CTK-R | |
| FLM | |
| FLQ | |
| FNM | |
| FNQ | |
| GGU | |
| HCLR | |
| KLK | |
| KLK-R | |
| KTK | |
| KTK-R | |
| MCL | |
| MEN | |
| MEQ | |
| MOF | |
| MOL | |
| OTM | |
| TRM | |
| 6JX | **LP-CC** |
| *FNQ-R suggested on primary of control transformers. | |
| ATQR | |
| FNQ-R | **FNQ-R** |
| KLDR | |

### Class J

| Fuse symbol | Low-Peak upgrade |
|---|---|
| A4J | **LPJ_SP** |
| AJT | |
| CJ | |
| CJS | |
| GF8B | |
| HRCXXJ | |
| J | |
| JA | |
| JCL | |
| JDL | |
| JFL | |
| JHC | |
| JKS | |
| JLS | |
| JTD | **LPJ_SP** |

### Class L

| Fuse symbol | Low-Peak upgrade |
|---|---|
| A4BQ | **KRP-C_SP** |
| A4BT | |
| A4BY | |
| A4BY (Type 55) | |
| CLF | |
| CLL | |
| CLU | |
| HRC-L | |
| KLLU | |
| KLPC | |
| KLU | |
| KTU | |
| L | |
| LCL | |
| LCU | **KRP-C_SP** |

The competitive fuse catalog symbols shown were derived from published information for various manufacturers. Because competitive products may differ from Bussmann series products, it is recommended that each selected product be checked for required electrical and mechanical characteristics before substitutions are made. Eaton is not responsible for misapplications of our products.

Overcurrent protection is application dependent. Consult the latest catalogs and application literature, or contact our Application Engineers toll free, 7:00 a.m. to 5:00 p.m. Central time, Monday-Friday at 855-287-7626 (855-BUSSMANN).

### Customer satisfaction team

Available to answer questions regarding Bussmann series products and services. Available Monday-Friday, 7:00 a.m. — 6:00 p.m. Central time.

- Toll-free phone: 855-287-7626 (855-BUSSMANN)
- Toll-free fax: 800-544-2570
- Email: BussCustSat@Eaton.com

### Emergency and after-hours orders

Next flight out or will call shipment for time-critical needs. Customers pay only standard product price, rush freight charges, and modest emergency service fee. Place these orders through the customer satisfaction team during regular business hours.

- After hours: 314-995-1342

### My.Eaton.com

Provides real time product availability, net pricing, order status and shipment tracking. Log onto My.Eaton.com or call:

- 1-800-468-1705 Option #3 for log-in assistance.

### Application engineering

Technical application assistance is available to all customers. Available Monday-Friday, 7:00 a.m. — 5:00 p.m. Central time.

- Toll-free phone: 855-287-7626 (855-BUSSMANN)
- Email: FuseTech@Eaton.com

## Bussmann series toolbox

**All the tools you need, in the palm of your hand.**

- > FC² Available Fault Current Calculator
- > Low Voltage Fuse Selector
- > Medium Voltage Fuse Selector
- > Surge Protective Device Selector
- > Connector Selector
- > Arcing Current Calculator
- > SCCR Protection Suite
- > OSCAR™ 2.1 Online Compliance
- > Selective Coordination Designer
- > RoHS Compliance Product Search
- > Distributor Locator

http://toolbox.bussmann.com

**Eaton**
1000 Eaton Boulevard
Cleveland, OH 44122
Eaton.com

Bussmann Division
114 Old State Road
Ellisville, MO 63021
United States
Eaton.com/bussmannseries

© 2018 Eaton
All Rights Reserved
Printed in USA
Publication No. 1007
October 2018

Eaton and Bussmann are valuable trademarks of Eaton in the U.S. and other countries. You are not permitted to use the Eaton trademarks without prior written consent of Eaton.

For Eaton's Bussmann series product information, call 1-855-287-7626 or visit: Eaton.com/bussmannseries

Follow us on social media to get the latest product and support information.

Powering Business Worldwide